HONDA PC800 PACIFIC COAST

MICROFICHE

Here is the microfiche for the Honda pacific coast as promised it has taken some time to complete this version only covers the US models but I have no problem ordering parts for my French 89 except for the plastics and other specific parts i.e. Ignition switch and top handlebar cover I have however found that my plastics end in either 0000 or 0200
for instance the front left brake caliper cover for the 89 us model is 45120-MR5-000ZA the ZA is the code for the pacific white mine is 45120-MR5-0000 and the bottom covers end in 0200 also some bits on mine are stamped -MR5B- trust the french to be different

I have checked the part numbers to check they are right but take care as some of the numbers for plastic bits vary in the book
if you look in the color tables at the front of the book some of the part numbers are different to the actual part numbers on the actual microfiche so double check that for the plastics it is the right number before ordering.

I am still trying to get a microfiche for the french and japan pc as soon as I can get it I will do one to cover these

Boring bit

there are 2230 individual part numbers and yes I counted them
and a total of 3921 parts but this does cover all the models and includes things like shims and different makes and grades of spark plugs ive also worked out there are roughly 3870 parts that make up an '89-'96 if you take the bits off that only fit the '97-'98 how sad am I

also if checking for part numbers on the net be aware I found that on some sites like csmnl there is an N/A meaning they are no longer obtainable but if you check david silver they can get them like the swingarm my local honda dealer stated they where no longer in stock yet david silvers could get me one from Belgium in around 7 days brand new but when he told me the price I turned it down I do know that the light metallic blue top left side panel is no longer in stock so ill have to buy a white one and spray it also when buying the plastics if you own a white candy or magna red pc if you are good at spraying the black 94/95 panels can be cheaper but there are some differences in the plastics my 89 has no disk caliper covers I have a set from a 90 but they dont fit my mudgaurd has 2 hooks to hold them around the forks on the 90 cover there is only 1 clip and its in the center of my 2 hooks and I need to hold it on with electrical ties also where they bolt to the fork brackets on my 89 the brackets are molded to the calliper cover on the 90 upwards they screw to the calliper cover and are thicker

PC800'89-'90-'94-'95-'96-'97-'98

HONDA

PARTS CATALOG

PC800'89-'90-'94-'95-'96-'97-'98

Pacific Coast

AMERICAN HONDA MOTOR CO., INC.

October, 1997
Fourth Edition
14MR5KM

American Honda Motor Co,. Inc. 1997

PRINTED IN USA

TABLE OF CONTENTS

	Grid	Page
How To Use This Catalogue	**A 2**	**iv**
Serial Numbers	**A 3**	**iv**
Construction Of Vehicle Identification Number (V.I.N)	**A 3**	**vii**
Manuals	**A 4**	**viii**
Colour Tables	**A 4**	**ix**
Model ID Photo	**A 12**	**xxiv**
Specifications	**A 12**	**xxv**
Bulk Hose	**B 4**	**xxxii**
Commonly Required Replacement Parts	**B 5**	**xxxiv**
Contents By Page No. Sequence	**B 7**	**xxxviii**
Contents In Alphabetical Order	**B 7**	**1**
Part Groups		
Engine Group	**C 1**	**2**
Frame Group	**E 1**	**48**
Index		
Part Number Index	**J 1**	**162**
Description Index	**K 1**	**176**

HOW TO USE THIS CATALOG

This parts catalogue is to be used when ordering replacement parts for the model (s) specified on the microfiche strip.

CATALOG PAGE BREAKDOWN

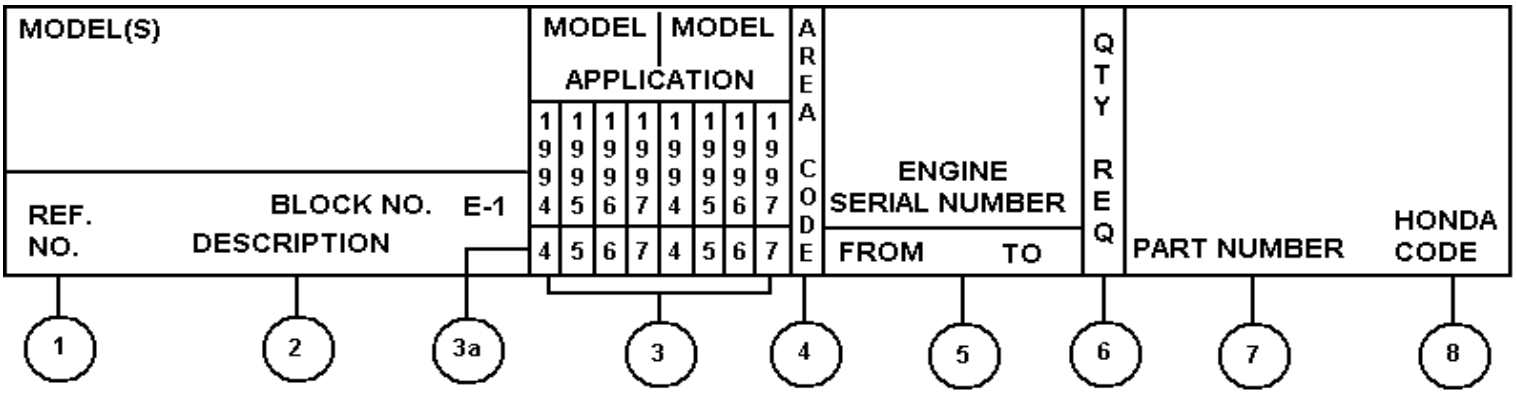

1. **REF. NO---** Reference number corresponding with the reference numbers on the illustrations.

All illustrations are representative only and do not necessarily correspond exactly to the actual part "Ni" signifies the part is not illustrated

2. **DESCRIPTION ---** Describes the part for the related part number

Abbreviations:

ASSY	= Assembly	L (100L)	= Link (100 Links)
COMP	= Complete	AC	= Alternating Current
R	= Right	DC	= Direct Current
L	= Left	IN	= Inlet
STD	= Standard	EX	= Exhaust
MM	= Millimetre	FR	= Front
G	= Gram	RR	= Rear
T (22T)	= Tooth (22 Teeth)	HEX	= Hexagonal
		AM	= Attaching Mark
A	= Ampere	TM	= Transcript Mark
V	= Volt	CDI	= Capacitive Discharge Ignition
W	= Watt		
KPH	= Kilometre Per Hour	WL	= With Labelling
MPH	= Miles Per Hour	WOL	= Without Labelling

Decision for 'R' or 'L'

R' or 'L' in the description of a part stands for Right hand side or the Left Hand side which is decided by the forward direction of travel of the vehicle

3. **MODEL APPLICATION ---** Model application for the various models listed within the catalogue. Single model applications will not require this section.

3a. **MODEL YEAR GUIDE --- A guide** to the part application, (prior to 1976 the guide reference is the model designation i.e., K0, K1, etc... For 1976 and above the guide reference is the last digit of the model year i.e., 1976=6: 1977=7: 1985=5 Etc...)

4. **AREA CODE ---** Area codes for parts that are unique to a particular area. Area codes are defined in the Serial Number application chart when applicable. This column will not be used in catalogues which do not include area codes.

5. **SERIAL NUMBERS---**Applies to Engine or Frame serial numbers depending on the section. The serial number of the vehicle (frame, engine, carburettor) should be checked prior to ordering parts for a specific unit. In cases where a part has been modified, the serial number of the vehicle bearing the modification is listed in the “SERIAL NUMBER” column

The modification parts are controlled by each pertinent serial number below:

Engine serial number --- Engine group parts (Block numbers beginning with 'E')

Carburettor identification number --- Carburettor component parts.

Frame serial numbers --- Frame group parts (Block numbers beginning with 'F'). Serial number application chart and Serial number locations are provided.

Note: Some models may be controlled by one serial number only.

6. **QTY REQ ---** Quantity required per unit as specified.
A. "N" in place of the quantity indicates AS REQUIRED.
B. "( )" or "(" by the quantity required indicates "optional".

7. **PART NUMBER ---** Part number corresponding to the reference numbers and application. Several part numbers may be listed under (1) reference number. For your convenience the current supersede chain, as of print date, has been listed for you. Superseded chains are subject to change without notice.

MAKE-UP OF PART NUMBERS

All parts are classified into two groups consisting of GENERAL PARTS and STANDARD PARTS. All parts are numbered in accordance with the system described below:

General Parts

Example: Fork comp. Part No.....51105-GR1-700ZA
Function No.....51
Component No.....105
Parts Classification No.....-GR1-
Classification No.....700
*Colour Code.....ZA

Standard Parts

Example: 8 x 8 Hex., Bolt Part No.....92000-08018-1A
Function No.....92
Type No.....000
Dimensions.....-08018-
ISO Standard Designation.....1
Chemical Surface Treatment.....A

* The colour code at the end of a General Part's part number indicates the colour. However, colour codes such as ZA, ZB, ZC, onward except ZZ, do not indicate the colour directly but refer to the notes ** **in the Description Column of the Parts Catalogue Microfiche. If the colour description is not indicated in the text. Refer to the colour table.

8. **HONDA CODE ---** The Honda Code is listed to the right of each part number

A. **ADDITIONAL INFORMATION ---**The table of contents located at the right of each microfiche grid lists sectioned titles in alphabetical order. Some microfiche will require separate tables of contents for the Engine and Frame sections which will be noted in a sub-heading; the introduction section (ROW A) of the Engine Section on even number grids and the contents of the Frame Section on odd number grids.

NOTE:

1. The Block No. Listed in the upper right hand corner of the Description heading refers to a complete illustration page and it's text, and should not be confused with the GRID NO. when using microfiche.

2. Rear view mirrors are standard equipment on all street legal models

SERIAL NUMBERS

Models and applicable serial numbers

Models and applicable serial Nos. Given in this catalog can be identified as follows.
Parts with types are exclusive for models destined for countries designated.
If no types are listed, parts are for common use.

Model	Type	Unique Area	Applicable Engine Serial No.	Applicable Frame Serial No.	Applicable Carburetor Identification No.
	A	EXCEPT CALIFORNIA	RC34E-2000064 ~ 2006659	RC340*KM000015 ~ KM003896	VDGTA A
PC800'89	AC	CALIFORNIA	RC34E-2000070 ~ 2006665	RC341*KM000031 ~ KM000734	VDGUA A
	A	EXCEPT CALIFORNIA	RC34E-2100005 ~ 2103743	RC340*LM100001 ~ LM102558	VDGTA A VGTA B
PC800'90	AC	CALIFORNIA	RC34E-2100015 ~ 2102109	RC341*LM100004 ~ LM100483	VDGUA A VDGUA B
	A	EXCEPT CALIFORNIA	RC34E-2200010 ~ 2201184	RC340*RM200008 ~ RM200980	VDGTA B
PC800'94	AC	CALIFORNIA	RC34E-2200015 ~ 2201204	RC341*RM200001 ~ RM200220	VDGUA B
	A	EXCEPT CALIFORNIA	RC34E-2300001 ~ 2300989	RC340*SM300001 ~ SM300869	VDGTA B
PC800'95	AC	CALIFORNIA	RC34E-2300001 ~ 2301009	RC341*SM300001 ~ SM300140	VDGUA B
	A	EXCEPT CALIFORNIA	RC34E-2400001 ~ 2401052	RC340*TM400001 ~ TM400849	VDGTA B
PC800'96	AC	CALIFORNIA	RC34E-2400098 ~ 2401055	RC341*TM400001 ~ TM400221	VDGUA B
	A	EXCEPT CALIFORNIA	RC34E-2500001 ~ 2500661	RC340*VM500001 ~ VM500623	VDGTA B
PC800'97	AC	CALIFORNIA	RC34E-2500014 ~ 2500712	RC341*VM500001 ~ VM500090	VDGUA B
	A	EXCEPT CALIFORNIA	RC34E-2600001 ~	RC340*WM600001 ~	VDGTA B
PC800'98	AC	CALIFORNIA	RC34E-2600001 ~	RC341*WM600001 ~	VDGUA B

CONSTRUCTION OF VEHICLE IDENTIFICATION NUMBER (V.I.N)

	W.M.I	V.D.S				V.I.S
(Example)	JH2	RC040	.	B	M	200001

W.M.I...World manufacturer identifier
V.D.S.... Vehicle descriptor section
V.I.S.....Vehicle indicator section

Sequential Production number

Plant representation

A	OHIO factory in U.S.A
B	AALST factory in BELGIUM
C	SAITAMA factory in JAPAN
D	GUADALAJARA factory in MEXICO
E	MONTESA factory in SPAIN
F	ATESSA factory in ITALY
K	KUMAMOTO factory in JAPAN
M	HAMAMATSU factory in JAPAN
R	MANAUS factory in BRAZIL
S	SUZUKA factory in JAPAN
T	TOCHIGI factory in JAPAN

Model year
(Example)
B...1981 C...1982 D...1983.....X...1999
<Except I O Q U>

Check digit
This code is used to detect errors in the V.I.N and
consists of a single digit number (0-9) or a letter "X"
it has no direct bearing upon the V.D.S and V.I.S

Vehicle description code
(Example) RCC40....CB750F NC030....CB400T
Refer to SERIAL NUMBERS

Make and Type of vehicle

JH2	HONDA Motorcycle (Manufactured in JAPAN)
1HF	HONDA Motorcycle (Manufactured in U.S.A)
YC1	HONDA Motorcycle (Manufactured in BELGIUM)
9C2	HONDA Motorcycle (Manufactured in BRAZIL)
3H1	HONDA Motorcycle (Manufactured in MEXICO)
VTM	HONDA Motorcycle (Manufactured in SPAIN)
ZDC	HONDA Motorcycle (Manufactured in ITALY)
JH3	HONDA All terrain vehicle (Manufactured in JAPAN)
478	HONDA All terrain vehicle (Manufactured in U.S.A)

Any change or modification of parts is directly related to the VDS and VIS
AVIS number will appear in the *Serial No* column of the Parts Catalog if a part is changed or modified

COMMENT
This example is generic and applies to 1981 and newer vehicles. 1980 models and prior are refered to as ***FRAME NUMBERS*** and the construction is designed by using the model designation or code followed by a sequential number.

MANUALS		
DESCRIPTION	PART NUMBER	H/C
PC800'89, '90, '94, '95, '96, '97, '98 MICROFICHE.....	14MR5KM	4415477

Location of stamped serial

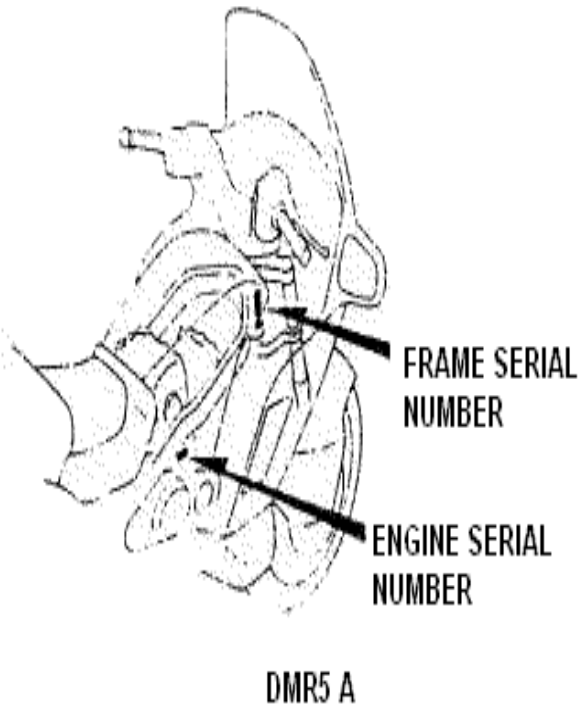

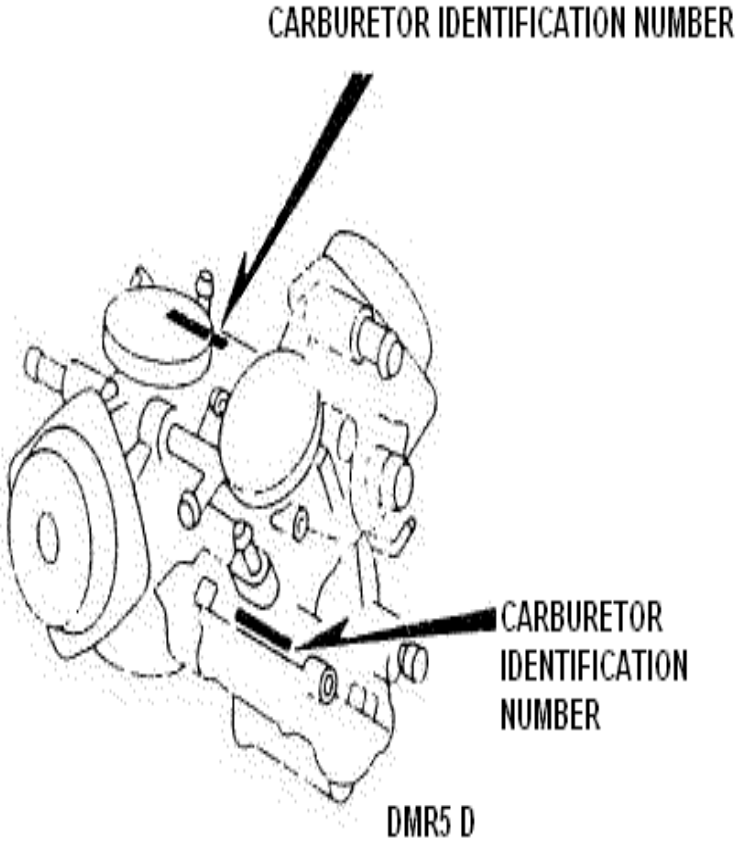

COLOR TABLES

Color chart
* (WL) = Stripes and labels other than caution labels are included in parts whose part name end in (WL).
* (WOL) = Stripes and labels are not included in parts whose part name end in (WOL).

COLOR CODE TABLE (Color descriptions omitted from the main text of the catalog)

PC800'89 Pacific Coast (A) RC340*KM000015 To KM003896 (AC) RC341*KM000031 To KM000734

	Model		PC800'89				
	Color		Pearl pacific white NH-251P	Serial Number			Area Code
	Code		NH251P	FROM		TO	
No.	Name of colored parts	Basic part no.					
1	CABLE COMP., CHOKE	17950-MR5-010	ZA				
2	COVER COMP., HANDLE CENTER	53020-MR5-000	ZA				
3	COVER COMP., L. POCKET	64223-MR5-000	ZA				
4	COVER, HANDLE LOWER	53115-MR5-000	ZA				
5	COVER, HANDLE UPPER	53110-MR5-000	ZA				
6	COVER, L. FR. CALIPER	45130-MR5-000	ZA				
7	COVER, L. FR. DISK	45355-MR5-000	ZA				
8	COVER, L. LOWER	83570-MR5-000	ZA				
9	COVER, L. PILLION STEP	50727-MR5-000	ZA				
10	COVER, L. SIDE	83700-MR5-000	ZA				
11	COVER, L. SIDE (B)	83750-MR5-000	ZA				
12	COVER, L. TRUNK	81440-MR5-000	ZA				
13	COVER, R. FR. CALIPER	45120-MR5-000	ZA				
14	COVER, R. FR. DISK	45255-MR5-000	ZA				
15	COVER, R. LOWER	83520-MR5-000	ZA				
16	COVER, R. PILLION STEP	50716-MR5-000	ZA				
17	COVER, R. SIDE	83600-MR5-000	ZA				
18	COVER, R. SIDE (B)	83650-MR5-000	ZA				
19	COVER, R. TRUNK	81240-MR5-000	ZA				
20	COWL SET, L. FR. UPPER (WL)	64214-MR5-000	ZA				
21	COWL SET, R. FR. UPPER (WL)	64204-MR5-000	ZA				
22	COWL SET, TAIL (WL)	77220-MR5-000	ZA				
23	COWL, FR. LOWER	64300-MR5-000	ZA				
24	DUCT COMP., SCREEN AIR	64120-MR5-000	ZB				
25	FENDER A, FR.	61105-MR5-000	ZA				
26	FENDER, RR. (A)	80100-MR5-000	ZA				
27	GARNISH, SCREEN	64110-MR5-000	ZA				
28	GRIP, L. PASSENGER	84120-MR5-000	ZA				
29	GRIP, R. PASSENGER	84110-MR5-000	ZA				
30	HOUSING, L.	88125-MR5-013	ZA				
31	HOUSING, R.	88115-MR5-013	ZA				
32	LABEL, COLOR	87565-MR5-300	ZA				
33	LABEL, DRIVE	87560-MT2-300	ZB				

COLOR TABLES

PC800'89 Pacific Coast (A) RC340*KM000015 To KM003896 (AC) RC341*KM000031 To KM000734

	Model		PC800'89				
	Color		Pearl pacific white NH-251P	Serial Number			Area Code
	Code		NH251P	FROM		TO	
No.	Name of colored parts	Basic part no.					
34	LABEL FUEL	87586-MR6-670	ZC				
35	LID ASSY, L. MAINTENANCE	64290-MR5-000	ZA				
36	LID ASSY, R. MAINTENANCE	64280-MR5-000	ZA				
37	LID SET, TRUNK (WL)	81200-MR5-000	ZA				
38	LID, FR. MAINTENANCE	64218-MR5-000	ZA				
39	LID, L. METER PANEL	64249-MR5-000	ZA				
40	LID, R. METER PANEL	64248-MR5-000	ZA				
41	LID, SHELTER	83131-MR5-000	ZA				
42	MARK, FR. UPPER COWL	64201-MR5-300	ZA				
43	MARK, TAIL COWL	77211-MR5-300	ZA				
44	MARK, TRUNK LID	81221-MR5-300	ZA				
45	MIRROR ASSY, L. BACK	88120-MR5-013	ZA				
46	MIRROR ASSY, R. BACK	88110-MR5-013	ZA				
47	PANEL, FR. CENTER	64217-MR5-000	ZA				
48	PANEL, L. CENTER	64247-MR5-000	ZA				
49	PANEL, L. INNER	64212-MR5-000	ZA				
50	PANEL, METER	64245-MR5-000	ZA				
51	PANEL, R. CENTER	64246-MR5-000	ZA				
52	PANEL, R. INNER	64211-MR5-000	ZA				
53	PROTECTOR, L. FAIRING	64215-MR5-000	ZA				
54	PROTECTOR, L. TRUNK	81414-MR5-000	ZA				
55	PROTECTOR, R. FAIRING	64205-MR5-000	ZA				
56	PROTECTOR, R. TRUNK	81214-MR5-000	ZA				
57	SEAT COMP, FR.	77100-MR5-000	ZA				
58	SEAT COMP, RR.	77300-MR5-000	ZA				
59	SHELTER COMP, TOP	83160-MR5-000	ZA				
60	STEP ASSY, L. PILLION	50720-MR5-000	ZA				
61	STEP ASSY, L. PILLION	50710-MR5-000	ZA				
62	VISOR, L.	88126-MR5-003	ZA				
63	VISOR METER	64240-MR5-000	ZA				
64	VISOR, R.	88116-MR5-003	ZA				

COLOR TABLES

PC800'90 Pacific Coast (A) RC340*LM100001 To LM102558 (AC) RC341*LM100004 To LM100483

	Model		PC800'90				
	Color		Candy glory red-U R-101C-U	Serial Number			Area Code
	Code		R101	FROM		TO	
No.	Name of colored parts	Basic part no.					
1	CABLE COMP., CHOKE	17950-MR5-870	ZA				
2	COVER B, L. SIDE	83750-MR5-000	ZC				
3	COVER B, R. SIDE	83650-MR5-000	ZC				
4	COVER COMP., HANDLE CENTER	53020-MR5-000	ZA				
5	COVER COMP., L. POCKET	64223-MR5-010	ZA				
6	COVER, HANDLE LOWER	53115-MR5-000	ZA				
7	COVER, HANDLE UPPER	53110-MR5-000	ZA				
8	COVER, L. FR. CALIPER	45130-MR5-010	ZC				
9	COVER, L. FR. DISK	45355-MR5-000	ZC				
10	COVER, L. LOWER	83570-MR5-000	ZC				
11	COVER, L. PILLION STEP	50726-MR5-000	ZC				
12	COVER, L. SIDE	83700-MR5-000	ZC				
13	COVER, L. TRUNK	81440-MR5-000	ZC				
14	COVER, R. FR. CALIPER	45120-MR5-010	ZC				
15	COVER, R. FR. DISK	45255-MR5-000	ZC				
16	COVER, R. LOWER	83520-MR5-000	ZC				
17	COVER, R. PILLION STEP	50716-MR5-000	ZC				
18	COVER, R. SIDE	83600-MR5-000	ZC				
19	COVER, R. TRUNK	81240-MR5-000	ZC				
20	COWL SET, L. FR. UPPER (WL)	64214-MR5-870	ZB				
21	COWL SET, R. FR. UPPER (WL)	64204-MR5-870	ZB				
22	COWL SET, TAIL (WL)	77220-MR5-870	ZC				
23	COWL, FR. LOWER	64300-MR5-000	ZC				
24	DUCT COMP., SCREEN AIR	64120-MR5-870	ZA				
25	FENDER A, FR.	61105-MR5-000	ZC				
26	FENDER A, RR.	80100-MR5-000	ZC				
27	GARNISH, SCREEN	64110-MR5-000	ZC				
28	GRIP, L. PASSENGER	84120-MR5-000	ZA				
29	GRIP, R. PASSENGER	84110-MR5-000	ZA				
30	HOUSING, L.	88125-MR5-013	ZC				
31	HOUSING, R.	88115-MR5-013	ZC				
32	LABEL, COLOR	87565-MR5-870	ZC				

COLOR TABLES

PC800'90 Pacific Coast (A) RC340*LM100001 To LM102558 (AC) RC341*LM100004 To LM100483

	Model		PC800'90				
	Color		Candy glory red-U R-101C-U	Serial Number			Area Code
	Code		R101	FROM		TO	
No.	Name of colored parts	Basic part no.					
33	LABEL, DRIVE	87560-MT2-300	ZB				
34	LABEL FUEL	87586-MR6-670	ZC				
35	LID ASSY, L. MAINTENANCE	64290-MR5-010	ZC				
36	LID ASSY, R. MAINTENANCE	64280-MR5-010	ZC				
37	LID SET, TRUNK (WL)	81200-MR5-870	ZC				
38	LID, FR. MAINTENANCE	64218-MR5-000	ZC				
39	LID, L. METER PANEL	64249-MR5-000	ZA				
40	LID, R. METER PANEL	64248-MR5-000	ZA				
41	LID, SHELTER	83131-MR5-000	ZC				
42	MARK, FR. UPPER COWL	64201-MR5-300	ZB				
43	MARK, TAIL COWL	77211-MR5-300	ZC				
44	MARK, TRUNK LID	81221-MR5-300	ZC				
45	MIRROR ASSY, L. BACK	88120-MR5-870	ZC				
46	MIRROR ASSY, R. BACK	88110-MR5-870	ZC				
47	PANEL, FR. CENTER	64217-MR5-000	ZC				
48	PANEL, L. CENTER	64247-MR5-000	ZA				
49	PANEL, L. INNER	64212-MR5-000	ZC				
50	PANEL, METER	64245-MR5-000	ZA				
51	PANEL, R. CENTER	64246-MR5-000	ZA				
52	PANEL, R. INNER	64211-MR5-000	ZC				
53	PROTECTOR, L. FAIRING	64215-MR5-000	ZC				
54	PROTECTOR, L. TRUNK	81414-MR5-000	ZC				
55	PROTECTOR, R. FAIRING	64205-MR5-000	ZC				
56	PROTECTOR, R. TRUNK	81214-MR5-000	ZC				
57	SEAT COMP, FR.	77100-MR5-000	ZA				
58	SEAT COMP, RR.	77300-MR5-000	ZA				
59	SHELTER COMP, TOP	83160-MR5-000	ZC				
60	STEP ASSY, L. PILLION	50720-MR5-870	ZC				
61	STEP ASSY, L. PILLION	50710-MR5-870	ZC				
62	VISOR, L.	88126-MR5-003	ZC				
63	VISOR METER	64240-MR5-000	ZA				
64	VISOR, R.	88116-MR5-003	ZC				

COLOR TABLES

PC800'94 Pacific Coast (A) RC340*RM200008 To RM200980 (AC) RC341*RM200001 To RM200220

	Model		PC800'94				
	Color		Black-Z NHI-Z	Serial Number			Area Code
	Code		NH1Z	FROM		TO	
No.	Name of colored parts	Basic part no.					
1	CABLE COMP., CHOKE	17950-MR5-870	ZA				
2	COVER B, L. SIDE	83750-MR5-000	ZE				
3	COVER B, R. SIDE	83650-MR5-000	ZE				
4	COVER COMP., HANDLE CENTER	53020-MR5-000	ZA				
5	COVER COMP., L. POCKET	64223-MR5-010	ZA				
6	COVER, HANDLE LOWER	53115-MR5-000	ZA				
7	COVER, HANDLE UPPER	53110-MR5-000	ZA				
8	COVER, L. FR. CALIPER	45130-MR5-010	ZE				
9	COVER, L. FR. DISK	45355-MR5-000	ZC				
10	COVER, L. LOWER	83570-MR5-000	ZC				
11	COVER, L. PILLION STEP	50726-MR5-000	ZC				
12	COVER, L. SIDE	83700-MR5-000	ZE				
13	COVER, L. TRUNK	81440-MR5-000	ZC				
14	COVER, R. FR. CALIPER	45120-MR5-010	ZE				
15	COVER, R. FR. DISK	45255-MR5-000	ZC				
16	COVER, R. LOWER	83520-MR5-000	ZC				
17	COVER, R. PILLION STEP	50716-MR5-000	ZC				
18	COVER, R. SIDE	83600-MR5-000	ZE				
19	COVER, R. TRUNK	81240-MR5-000	ZC				
20	COWL SET, L. FR. UPPER (WL)	64214-MR5-800	ZC				
21	COWL SET, R. FR. UPPER (WL)	64204-MR5-800	ZC				
22	COWL SET, TAIL (WL)	77220-MR5-800	ZC				
23	COWL, FR. LOWER	64300-MR5-000	ZC				
24	DUCT COMP., SCREEN AIR	64120-MR5-870	ZA				
25	FENDER A, FR.	61105-MR5-000	ZE				
26	FENDER A, RR.	80100-MR5-000	ZC				
27	GARNISH, SCREEN	64110-MR5-800	ZA				
28	GRIP, L. PASSENGER	84120-MR5-000	ZA				
29	GRIP, R. PASSENGER	84110-MR5-000	ZA				
30	HOUSING, L.	88125-MR5-013	ZE				
31	HOUSING, R.	88115-MR5-013	ZE				
32	LABEL, COLOR	87565-MR5-800	ZB				

COLOR TABLES

PC800'94 Pacific Coast (A) RC340*RM200008 To RM200980 (AC) RC341*RM200001 To RM200220

	Model		PC800'94				
	Color		Black-Z NHI-Z	Serial Number			Area Code
	Code		NH1Z	FROM		TO	
No.	Name of colored parts	Basic part no.					
33	LABEL, DRIVE	87560-MW0-670	ZB				
34	LABEL FUEL	87586-MR6-670	ZD				
35	LID ASSY, L. MAINTENANCE	64290-MR5-010	ZE				
36	LID ASSY, R. MAINTENANCE	64280-MR5-010	ZE				
37	LID SET, TRUNK (WL)	81200-MR5-800	ZC				
38	LID, FR. MAINTENANCE	64218-MR5-000	ZE				
39	LID, L. METER PANEL	64249-MR5-000	ZA				
40	LID, R. METER PANEL	64248-MR5-000	ZA				
41	LID, SHELTER	83131-MR5-000	ZE				
42	MARK, FR. UPPER COWL	64201-MR5-800	ZB				
43	MARK, TAIL LID	77211-MR5-800	ZB				
44	MARK, TRUNK LID	81221-MR5-800	ZB				
45	MIRROR ASSY, L. BACK	88120-MR5-870	ZE				
46	MIRROR ASSY, R. BACK	88110-MR5-870	ZE				
47	PANEL, FR. CENTER	64217-MR5-000	ZE				
48	PANEL, L. CENTER	64247-MR5-000	ZA				
49	PANEL, L. INNER	64212-MR5-000	ZE				
50	PANEL, METER	64245-MR5-000	ZA				
51	PANEL, R. CENTER	64246-MR5-000	ZA				
52	PANEL, R. INNER	64211-MR5-000	ZE				
53	PROTECTOR, L. FAIRING	64215-MR5-000	ZC				
54	PROTECTOR, L. TRUNK	81414-MR5-000	ZC				
55	PROTECTOR, R. FAIRING	64205-MR5-000	ZC				
56	PROTECTOR, R. TRUNK	81214-MR5-000	ZC				
57	SEAT COMP, FR.	77100-MR5-830	ZA				
58	SEAT COMP, RR.	77300-MR5-000	ZA				
59	SHELTER COMP, TOP	83160-MR5-000	ZE				
60	VISOR, L.	88126-MR5-003	ZE				
61	VISOR METER	64240-MR5-830	ZA				
62	VISOR, R.	88116-MR5-003	ZE				

COLOR TABLES

PC800'95 Pacific Coast (A) RC340*SM300002 To Subsequant (AC) RC341*SM300001 To Subsequant

	Model		PC800'95				
	Color		Black-Z NHI-Z	Serial Number			Area Code
	Code		NH1Z	FROM		TO	
No.	Name of colored parts	Basic part no.					
1	COVER B, L. SIDE	83750-MR5-000	ZE				
2	COVER B, R. SIDE	83650-MR5-000	ZE				
3	COVER COMP., HANDLE CENTER	53020-MR5-000	ZA				
4	COVER COMP., L. POCKET	64223-MR5-010	ZA				
5	COVER, HANDLE LOWER	53115-MR5-000	ZA				
6	COVER, HANDLE UPPER	53110-MR5-000	ZA				
7	COVER, L. FR. CALIPER	45130-MR5-010	ZE				
8	COVER, L. FR. DISK	45355-MR5-000	ZC				
9	COVER, L. LOWER	83570-MR5-000	ZC				
10	COVER, L. PILLION STEP	50726-MR5-000	ZC				
11	COVER, L. SIDE	83700-MR5-000	ZE				
12	COVER, L. TRUNK	81440-MR5-000	ZC				
13	COVER, R. FR. CALIPER	45120-MR5-010	ZE				
14	COVER, R. FR. DISK	45255-MR5-000	ZC				
15	COVER, R. LOWER	83520-MR5-000	ZC				
16	COVER, R. PILLION STEP	50716-MR5-000	ZC				
17	COVER, R. SIDE	83600-MR5-000	ZE				
18	COVER, R. TRUNK	81240-MR5-000	ZC				
19	COWL SET, L. FR. UPPER (WL)	64214-MR5-800	ZC				
20	COWL SET, R. FR. UPPER (WL)	64204-MR5-800	ZC				
21	COWL SET, TAIL (WL)	77220-MR5-800	ZC				
22	COWL, FR. LOWER	64300-MR5-000	ZC				
23	DUCT COMP., SCREEN AIR	64120-MR5-870	ZA				
24	FENDER A, FR.	61105-MR5-000	ZE				
25	FENDER A, RR.	80100-MR5-000	ZC				
26	GARNISH, SCREEN	64110-MR5-800	ZA				
27	GRIP, L. PASSENGER	84120-MR5-000	ZA				
28	GRIP, R. PASSENGER	84110-MR5-000	ZA				
29	HOUSING, L.	88125-MR5-013	ZE				
30	HOUSING, R.	88115-MR5-013	ZE				
31	LABEL, COLOR	87565-MR5-800	ZB				
32	LABEL, DRIVE	87560-MW0-670	ZB				

COLOR TABLES

PC800'95 Pacific Coast (A) RC340*SM300002 To Subsequant (AC) RC341*SM300001 To Subsequant

	Model		PC800'95				
	Color		Black-Z NHI-Z	Serial Number			Area Code
	Code		NH1Z	FROM		TO	
No.	Name of colored parts	Basic part no.					
33	LABEL FUEL	87586-MR6-670	ZD				
34	LID ASSY, L. MAINTENANCE	64290-MR5-010	ZE				
35	LID ASSY, R. MAINTENANCE	64280-MR5-010	ZE				
36	LID SET, TRUNK (WL)	81200-MR5-800	ZC				
37	LID, FR. MAINTENANCE	64218-MR5-000	ZE				
38	LID, L. METER PANEL	64249-MR5-000	ZA				
39	LID, R. METER PANEL	64248-MR5-000	ZA				
40	LID, SHELTER	83131-MR5-000	ZE				
41	MARK, FR. UPPER COWL	64201-MR5-800	ZB				
42	MARK, TAIL LID	77211-MR5-800	ZB				
43	MARK, TRUNK LID	81221-MR5-800	ZB				
44	MIRROR ASSY, L. BACK	88120-MR5-870	ZE				
45	MIRROR ASSY, R. BACK	88110-MR5-870	ZE				
46	PANEL, FR. CENTER	64217-MR5-000	ZE				
47	PANEL, L. CENTER	64247-MR5-000	ZA				
48	PANEL, L. INNER	64212-MR5-000	ZE				
49	PANEL, METER	64245-MR5-000	ZA				
50	PANEL, R. CENTER	64246-MR5-000	ZA				
51	PANEL, R. INNER	64211-MR5-000	ZE				
52	PROTECTOR, L. FAIRING	64215-MR5-000	ZC				
53	PROTECTOR, L. TRUNK	81414-MR5-000	ZC				
54	PROTECTOR, R. FAIRING	64205-MR5-000	ZC				
55	PROTECTOR, R. TRUNK	81214-MR5-000	ZC				
56	SEAT COMP, FR.	77100-MR5-830	ZA				
57	SEAT COMP, RR.	77300-MR5-000	ZA				
58	SHELTER COMP, TOP	83160-MR5-000	ZE				
59	VISOR, L.	88126-MR5-003	ZE				
60	VISOR METER	64240-MR5-830	ZA				
61	VISOR, R.	88116-MR5-003	ZE				

COLOR TABLES

PC800'96 Pacific Coast (A) RC340*TM400001 To Subsequant (AC) RC341*TM400001 To Subsequant

	Model		PC800'96				
	Color		Magna red R-201	Serial Number			Area Code
	Code		R201D	FROM		TO	
No.	Name of colored parts	Basic part no.					
1	COVER B, L. SIDE	83750-MR5-000	ZE				
2	COVER B, R. SIDE	83650-MR5-000	ZE				
3	COVER COMP., HANDLE CENTER	53020-MR5-000	ZB				
4	COVER COMP., L. POCKET	64223-MR5-010	ZA				
5	COVER, HANDLE LOWER	53115-MR5-000	ZB				
6	COVER, HANDLE UPPER	53110-MR5-000	ZB				
7	COVER, L. FR. CALIPER	45130-MR5-010	ZF				
8	COVER, L. FR. DISK	45355-MR5-000	ZF				
9	COVER, L. LOWER	83570-MR5-000	ZF				
10	COVER, L. PILLION STEP	50726-MR5-000	ZF				
11	COVER, L. SIDE	83700-MR5-000	ZF				
12	COVER, L. TRUNK	81440-MR5-000	ZF				
13	COVER, R. FR. CALIPER	45120-MR5-010	ZF				
14	COVER, R. FR. DISK	45255-MR5-000	ZF				
15	COVER, R. LOWER	83520-MR5-000	ZF				
16	COVER, R. PILLION STEP	50716-MR5-000	ZF				
17	COVER, R. SIDE	83600-MR5-000	ZF				
18	COVER, R. TRUNK	81240-MR5-000	ZF				
19	COWL SET, L. FR. UPPER (WL)	64214-MR5-A20	ZA				
20	COWL SET, R. FR. UPPER (WL)	64204-MR5-A20	ZF				
21	COWL SET, TAIL (WL)	77220-MR5-A20	ZA				
22	COWL, FR. LOWER	64300-MR5-000	ZF				
23	DUCT COMP., SCREEN AIR	64120-MR5-A20	ZA				
24	FENDER A, FR.	61105-MR5-000	ZF				
25	FENDER A, RR.	80100-MR5-000	ZF				
26	GARNISH, SCREEN	64110-MR5-800	ZB				
27	GRIP, L. PASSENGER	84120-MR5-000	ZB				
28	GRIP, R. PASSENGER	84110-MR5-000	ZB				
29	HOUSING, L.	88125-MR5-013	ZF				
30	HOUSING, R.	88115-MR5-013	ZG				
31	KNOB, L. POCKET COVER	64234-MR5-A20	ZA				
32	KNOB, L. POCKET COVER	64224-MR5-A20	ZA				

COLOR TABLES

PC800'96 Pacific Coast (A) RC340*TM400001 To Subsequant (AC) RC341*TM400001 To Subsequant

	Model		PC800'96				
	Color		Magna red R-201	Serial Number			Area Code
	Code		R201D	FROM		TO	
No.	Name of colored parts	Basic part no.					
33	LABEL, COLOR	87565-MR5-A20	ZA				
34	LABEL, DRIVE	87560-MW0-670	ZB				
35	LABEL FUEL	87586-MR6-670	ZD				
36	LID ASSY, L. MAINTENANCE	64290-MR5-010	ZF				
37	LID ASSY, R. MAINTENANCE	64280-MR5-010	ZF				
38	LID SET, TRUNK (WL)	81200-MR5-A20	ZA				
39	LID, FR. MAINTENANCE	64218-MR5-000	ZF				
40	LID, L. METER PANEL	64249-MR5-000	ZA				
41	LID, R. METER PANEL	64248-MR5-000	ZA				
42	LID, SHELTER	83131-MR5-000	ZE				
43	MARK, FR. UPPER COWL	64201-MR5-A20	ZA				
44	MARK, TAIL LID	77211-MR5-A20	ZA				
45	MARK, TRUNK LID	81221-MR5-A20	ZA				
46	MIRROR ASSY, L. BACK	88120-MR5-870	ZF				
47	MIRROR ASSY, R. BACK	88110-MR5-870	ZF				
48	PANEL, FR. CENTER	64217-MR5-000	ZF				
49	PANEL, L. CENTER	64247-MR5-000	ZB				
50	PANEL, L. INNER	64212-MR5-000	ZF				
51	PANEL, METER	64245-MR5-800	ZA				
52	PANEL, R. CENTER	64246-MR5-000	ZB				
53	PANEL, R. INNER	64211-MR5-000	ZF				
54	PROTECTOR, L. FAIRING	64215-MR5-000	ZF				
55	PROTECTOR, L. TRUNK	81414-MR5-000	ZF				
56	PROTECTOR, R. FAIRING	64205-MR5-000	ZF				
57	PROTECTOR, R. TRUNK	81214-MR5-000	ZC				
58	SEAT COMP, FR.	77100-MR5-830	ZA				
59	SEAT COMP, RR.	77300-MR5-000	ZB				
60	SHELTER COMP, TOP	83160-MR5-000	ZE				
61	VISOR, L.	88126-MR5-003	ZF				
62	VISOR METER	64240-MR5-830	ZB				
63	VISOR, R.	88116-MR5-003	ZG				

COLOR TABLES

PC800'97 Pacific Coast (A) RC340*VM500001 To Subsequant (AC) RC341*VM500001 To Subsequant

	Model		PC800'97				
	Color		Magna red R-201	Serial Number			Area Code
	Code		R201D	FROM		TO	
No.	Name of colored parts	Basic part no.					
1	CABLE COMP., CHOKE	17950-MR5-870	ZB				
2	COVER B, L. SIDE	83750-MR5-000	ZF				
3	COVER B, R. SIDE	83650-MR5-000	ZF				
4	COVER COMP., HANDLE CENTER	53020-MR5-A30	ZA				
5	COVER COMP., L. POCKET	64223-MR5-A30	ZA				
6	COVER, HANDLE LOWER	53115-MR5-A30	ZA				
7	COVER, HANDLE UPPER	53110-MR5-A30	ZA				
8	COVER, L. LOWER	83570-MR5-A30	ZA				
9	COVER, L. PILLION STEP	50726-MR5-A30	ZA				
10	COVER, L. SIDE	83700-MR5-000	ZF				
11	COVER, L. TRUNK	81440-MR5-A30	ZA				
12	COVER, R. LOWER	83520-MR5-A30	ZA				
13	COVER, R. PILLION STEP	50716-MR5-A30	ZA				
14	COVER, R. POCKET	64225-MR5-A30	ZA				
15	COVER, R. SIDE	83600-MR5-000	ZF				
16	COVER, R. TRUNK	81240-MR5-A30	ZA				
17	COWL SET, L. FR. UPPER (WL)	64214-MR5-A20	ZA				
18	COWL SET, R. FR. UPPER (WL)	64204-MR5-A20	ZA				
19	COWL SET, TAIL (WL)	77220-MR5-A20	ZA				
20	COWL, FR. LOWER	64300-MR5-A30	ZA				
21	DUCT COMP., SCREEN AIR	64120-MR5-A20	ZA				
22	FENDER A, RR.	80100-MR5-A30	ZA				
23	FENDER COMP., FR.	61100-MZ5-000	ZE				
24	GARNISH, SCREEN	64110-MR5-800	ZB				
25	GRIP, L. PASSENGER	84120-MR5-000	ZB				
26	GRIP, R. PASSENGER	84110-MR5-000	ZB				
27	HOUSING, L.	88125-MR5-013	ZF				
28	HOUSING, R.	88115-MR5-013	ZG				
29	KNOB, L. POCKET COVER	64234-MR5-A20	ZA				
30	KNOB, L. POCKET COVER	64224-MR5-A20	ZA				

COLOR TABLES

PC800'97 Pacific Coast (A) RC340*VM500001 To Subsequant (AC) RC341*VM500001 To Subsequant

	Model		PC800'97				
	Color		Magna red R-201	Serial Number			Area Code
	Code		R201D	FROM		TO	
No.	Name of colored parts	Basic part no.					
31	LABEL, COLOR	87565-MR5-A30	ZA				
32	LID ASSY, L. MAINTENANCE	64290-MR5-010	ZF				
33	LID ASSY, R. MAINTENANCE	64280-MR5-010	ZF				
34	LID SET, TRUNK (WL)	81200-MR5-A20	ZA				
35	LID, FR. MAINTENANCE	64218-MR5-000	ZF				
36	LID, L. METER PANEL	64249-MR5-A30	ZA				
37	LID, R. METER PANEL	64248-MR5-A30	ZA				
38	LID, SHELTER	83131-MR5-000	ZF				
39	MARK, FR. UPPER COWL	64201-MR5-A20	ZA				
40	MARK, TAIL LID	77211-MR5-A20	ZA				
41	MARK, TRUNK LID	81221-MR5-A20	ZA				
42	MIRROR ASSY, L. BACK	88120-MR5-870	ZF				
43	MIRROR ASSY, R. BACK	88110-MR5-870	ZF				
44	PANEL, FR. CENTER	64217-MR5-A30	ZA				
45	PANEL, L. CENTER	64247-MR5-A30	ZA				
46	PANEL, L. INNER	64212-MR5-A30	ZA				
47	PANEL, METER	64245-MR5-A30	ZA				
48	PANEL, R. CENTER	64246-MR5-A30	ZA				
49	PANEL, R. INNER	64211-MR5-A30	ZA				
50	PLUG, HOLE	90656-KM1-000	ZH				
51	PROTECTOR, L. FAIRING	64215-MR5-A30	ZA				
52	PROTECTOR, L. TRUNK	81414-MR5-A30	ZA				
53	PROTECTOR, R. FAIRING	64205-MR5-A30	ZA				
54	PROTECTOR, R. TRUNK	81214-MR5-A30	ZA				
55	SEAT COMP, FR.	77100-MR5-A30	ZA				
56	SEAT COMP, RR.	77300-MR5-A30	ZA				
57	SHELTER COMP, TOP	83160-MR5-000	ZF				
58	VISOR, L.	88126-MR5-003	ZF				
59	VISOR METER	64240-MR5-A30	ZA				
60	VISOR, R.	88116-MR5-003	ZG				

COLOR TABLES

PC800'98 Pacific Coast (A) RC340*WM600001 To Subsequant (AC) RC341*WM600001 To Subsequant

	Model		PC800'98				
	Color		Magna red R-201	Serial Number			Area Code
	Code		R201D	FROM		TO	
No.	Name of colored parts	Basic part no.					
1	CABLE COMP., CHOKE	17950-MR5-870	ZB				
2	COVER B, L. SIDE	83750-MR5-000	ZF				
3	COVER B, R. SIDE	83650-MR5-000	ZF				
4	COVER COMP., HANDLE CENTER	53020-MR5-A30	ZA				
5	COVER COMP., L. POCKET	64223-MR5-A30	ZA				
6	COVER, HANDLE LOWER	53115-MR5-A30	ZA				
7	COVER, HANDLE UPPER	53110-MR5-A30	ZA				
8	COVER, L. LOWER	83570-MR5-A30	ZA				
9	COVER, L. PILLION STEP	50726-MR5-A30	ZA				
10	COVER, L. SIDE	83700-MR5-000	ZF				
11	COVER, L. TRUNK	81440-MR5-A30	ZA				
12	COVER, R. LOWER	83520-MR5-A30	ZA				
13	COVER, R. PILLION STEP	50716-MR5-A30	ZA				
14	COVER, R. POCKET	64225-MR5-A30	ZA				
15	COVER, R. SIDE	83600-MR5-000	ZF				
16	COVER, R. TRUNK	81240-MR5-A30	ZA				
17	COWL SET, L. FR. UPPER (WL)	64214-MR5-A20	ZA				
18	COWL SET, R. FR. UPPER (WL)	64204-MR5-A20	ZA				
19	COWL SET, TAIL (WL)	77220-MR5-A20	ZA				
20	COWL, FR. LOWER	64300-MR5-A30	ZA				
21	DUCT COMP., SCREEN AIR	64120-MR5-A20	ZA				
22	FENDER A, RR.	80100-MR5-A30	ZA				
23	FENDER COMP., FR.	61100-MZ5-000	ZE				
24	GARNISH, SCREEN	64110-MR5-800	ZB				
25	GRIP, L. PASSENGER	84120-MR5-000	ZB				
26	GRIP, R. PASSENGER	84110-MR5-000	ZB				
27	HOUSING, L.	88125-MR5-013	ZF				
28	HOUSING, R.	88115-MR5-013	ZG				
29	KNOB, L. POCKET COVER	64234-MR5-A20	ZA				
30	KNOB, L. POCKET COVER	64224-MR5-A20	ZA				

COLOR TABLES

PC800'98 Pacific Coast (A) RC340*WM600001 To Subsequant (AC) RC341*WM600001 To Subsequant

	Model		PC800'98				
	Color		Magna red R-201	Serial Number			Area Code
	Code		R201D	FROM		TO	
No.	Name of colored parts	Basic part no.					
31	LABEL, COLOR	87565-MR5-A30	ZA				
32	LID ASSY, L. MAINTENANCE	64290-MR5-010	ZF				
33	LID ASSY, R. MAINTENANCE	64280-MR5-010	ZF				
34	LID SET, TRUNK (WL)	81200-MR5-A20	ZA				
35	LID, FR. MAINTENANCE	64218-MR5-000	ZF				
36	LID, L. METER PANEL	64249-MR5-A30	ZA				
37	LID, R. METER PANEL	64248-MR5-A30	ZA				
38	LID, SHELTER	83131-MR5-000	ZF				
39	MARK, FR. UPPER COWL	64201-MR5-A20	ZA				
40	MARK, TAIL LID	77211-MR5-A20	ZA				
41	MARK, TRUNK LID	81221-MR5-A20	ZA				
42	MIRROR ASSY, L. BACK	88120-MR5-870	ZF				
43	MIRROR ASSY, R. BACK	88110-MR5-870	ZF				
44	PANEL, FR. CENTER	64217-MR5-A30	ZA				
45	PANEL, L. CENTER	64247-MR5-A30	ZA				
46	PANEL, L. INNER	64212-MR5-A30	ZA				
47	PANEL, METER	64245-MR5-A30	ZA				
48	PANEL, R. CENTER	64246-MR5-A30	ZA				
49	PANEL, R. INNER	64211-MR5-A30	ZA				
50	PLUG, HOLE	90656-KM1-000	ZH				
51	PROTECTOR, L. FAIRING	64215-MR5-A30	ZA				
52	PROTECTOR, L. TRUNK	81414-MR5-A30	ZA				
53	PROTECTOR, R. FAIRING	64205-MR5-A30	ZA				
54	PROTECTOR, R. TRUNK	81214-MR5-A30	ZA				
55	SEAT COMP, FR.	77100-MR5-A30	ZA				
56	SEAT COMP, RR.	77300-MR5-A30	ZA				
57	SHELTER COMP, TOP	83160-MR5-000	ZF				
58	VISOR, L.	88126-MR5-003	ZF				
59	VISOR METER	64240-MR5-A30	ZA				
60	VISOR, R.	88116-MR5-003	ZG				

PC800'89 PACIFIC COAST (US MODEL)

PC800'89 PACIFIC COAST (FRANCE AND ITALY MODEL)

PC800'89 PACIFIC COAST (JAPAN MODEL)

SPECIFICATIONS	
SECTION SUBJECT	**PC800'89**
ENGINE	
Cylinder.....	2-Cylinder
Strokes.....	4-Stroke
Cooling.....	Water-cooled
Camshaft.....	OHC
Valves per cylinder.....	3-Valve
Displacement.....	800CC
Lubrication system.....	Wet sump
Carburetor.....	32mm (1.26") (2)
Main jet.....	#125/#122
Slow jet.....	#38
TRANSMISSION	
Transmission type.....	Constant mesh
Transmission speed.....	5-Speed
Clutch.....	Wet multi plate
Shift pattern.....	1-N-2-3-4-5
CHASSIS	
Fuel tank capacity (Std).....	4.2gal
Air filter type.....	Paper
Front brake.....	Double disc
Rear brake.....	Leading-trailing
Front tire.....	120/80-17 61H
Tire pressure.....	33psi
Rear tire.....	140/80-15MC 67H
Tire pressure.....	33psi
SERVICE/TUNING	
Ignition type.....	Full transistor
Spark plug gap.....	0.8-0.9mm (0.031-0.035")
LUBRICATION	
Recommended fuel.....	86+ Octane
Engine oil - Pro Honda:	
GN4 10W40.....	08C35-A141M01
GN4 20W50.....	08C35-A251M01
Engine oil capacity:	
After draining.....	3.20qt
After reassembly.....	3.70qt
Coolant type.....	08C50-C321S01
Coolant ratio.....	50/50
Capacity.....	2.7qt
Fork oil:	
Pro Honda (5W SS-7).....	08028-0005
Pro Honda (10W SS-8).....	08028-0010

Note: French, Italy, and Japan, models have a light switch on right handle bar. No reflectors on caliper covers or rear indicators, and a different ignition switch. Also Italy model has a pass light switch.

PC800'90 PACIFIC COAST (US MODEL)

PC800'90 PACIFIC COAST (FRENCH MODEL)

SPECIFICATIONS	
SECTION SUBJECT	**PC800'90**
ENGINE	
Cylinder.....	2-Cylinder
Strokes.....	4-Stroke
Cooling.....	Water-cooled
Camshaft.....	OHC
Valves per cylinder.....	3-Valve
Displacement.....	800CC
Lubrication system.....	Wet sump
Carburetor.....	32mm (1.26") (2)
Main jet.....	#125/#122
Slow jet.....	#38
TRANSMISSION	
Transmission type.....	Constant mesh
Transmission speed.....	5-Speed
Clutch.....	Wet multi plate
Shift pattern.....	1-N-2-3-4-5
CHASSIS	
Fuel tank capacity (Std).....	4.2gal
Air filter type.....	Paper
Front brake.....	Hydraulic double disk
Rear brake.....	Mechanical drum
Front tire.....	120/80-17 61H
Tire pressure.....	33psi
Rear tire.....	140/80-15MC 67H
Tire pressure.....	33psi
SERVICE/TUNING	
Ignition type.....	Full transistor
Spark plug gap.....	0.8-0.9mm (0.031-0.035")
LUBRICATION	
Recommended fuel.....	86+ Octane
Engine oil - Pro Honda:	
GN4 10W40.....	08C35-A141M01
GN4 20W50.....	08C35-A251M01
Engine oil capacity:	
After draining.....	3.20qt
After reassembly.....	3.70qt
Coolant type.....	08C50-C321S01
Coolant ratio.....	50/50
Capacity.....	2.7qt
Fork oil:	
Pro Honda (5W SS-7).....	08028-0005
Pro Honda (10W SS-8).....	08028-0010

Note: French model has a light switch on right handle bar. No reflectors on caliper covers or rear indicators, and a different ignition switch.

PC800'94 PACIFIC COAST (US MODEL)

SPECIFICATIONS

SECTION SUBJECT	PC800'94
ENGINE	
Cylinder	2-Cylinder
Strokes	4-Stroke
Cooling	Water-cooled
Camshaft	OHC
Valves per cylinder	3-Valve
Displacement	800CC
Lubrication system	Wet sump
Carburetor	32mm (1.26") (2)
Main jet	#125/#122
Slow jet	#38
TRANSMISSION	
Transmission type	Constant mesh
Transmission speed	5-Speed
Clutch	Wet multi plate
Shift pattern	1-N-2-3-4-5
CHASSIS	
Fuel tank capacity (Std)	4.2gal
Air filter type	Paper
Front brake	Hydraulic double disk
Rear brake	Mechanical drum
Front tire	120/80-17 61H
Tire pressure	33psi
Rear tire	140/80-15MC 67H
Tire pressure	33psi
SERVICE/TUNING	
Ignition type	Full transistor
Spark plug gap	0.8-0.9mm (0.031-0.035")
LUBRICATION	
Recommended fuel	86+ Octane
Engine oil - Pro Honda:	
GN4 10W40	08C35-A141M01
GN4 20W50	08C35-A251M01
Engine oil capacity:	
After draining	3.20qt
After reassembly	3.70qt
Coolant type	08C50-C321S01
Coolant ratio	50/50
Capacity	2.7qt
Fork oil:	
Pro Honda (5W SS-7)	08028-0005
Pro Honda (10W SS-8)	08028-0010

PC800'95 PACIFIC COAST (US MODEL)

SPECIFICATIONS

SECTION SUBJECT	PC800'95
ENGINE	
Cylinder	2-Cylinder
Strokes	4-Stroke
Cooling	Water-cooled
Camshaft	OHC
Valves per cylinder	3-Valve
Displacement	800CC
Lubrication system	Wet sump
Carburetor	32mm (1.26") (2)
Main jet	#125/#122
Slow jet	#38
TRANSMISSION	
Transmission type	Constant mesh
Transmission speed	5-Speed
Clutch	Wet multi plate
Shift pattern	1-N-2-3-4-5
CHASSIS	
Fuel tank capacity (Std)	4.2gal
Air filter type	Paper
Front brake	Hydraulic double disk
Rear brake	Mechanical drum
Front tire	120/80-17 61H
Tire pressure	33psi
Rear tire	140/80-15MC 67H
Tire pressure	33psi
SERVICE/TUNING	
Ignition type	Full transistor
Spark plug gap	0.8-0.9mm (0.031-0.035")
LUBRICATION	
Recommended fuel	86+ Octane
Engine oil - Pro Honda:	
GN4 10W40	08C35-A141M01
GN4 20W50	08C35-A251M01
Engine oil capacity:	
After draining	3.20qt
After reassembly	3.70qt
Coolant type	08C50-C321S01
Coolant ratio	50/50
Capacity	2.7qt
Fork oil:	
Pro Honda (5W SS-7)	08028-0005
Pro Honda (10W SS-8)	08028-0010

PC800'96 PACIFIC COAST (US MODEL)

SPECIFICATIONS

SECTION SUBJECT	PC800'96
ENGINE	
Cylinder.....	Specification Listings To Be Provided At A Later Date
Strokes.....	
Cooling.....	
Camshaft.....	
Valves per cylinder.....	
Displacement.....	
Lubrication system.....	
Carburetor.....	
Main jet.....	
Slow jet.....	
TRANSMISSION	
Transmission type.....	
Transmission speed.....	
Clutch.....	
Shift pattern.....	
CHASSIS	
Fuel tank capacity (Std).....	
Air filter type.....	
Front brake.....	
Rear brake.....	
Front tire.....	
Tire pressure.....	
Rear tire.....	
Tire pressure.....	
SERVICE/TUNING	
Ignition type.....	
Spark plug gap.....	
LUBRICATION	
Recommended fuel.....	
Engine oil - Pro Honda:	
GN4 10W40.....	
GN4 20W50.....	
Engine oil capacity:	
After draining.....	
After reassembly.....	
Coolant type.....	
Coolant ratio.....	
Capacity.....	
Fork oil:	
Pro Honda (5W SS-7).....	
Pro Honda (10W SS-8).....	

PC800'97 PACIFIC COAST (US MODEL)

SPECIFICATIONS

SECTION SUBJECT	PC800'96
ENGINE	
Cylinder.....	Specification Listings To Be Provided At A Later Date
Strokes.....	
Cooling.....	
Camshaft.....	
Valves per cylinder.....	
Displacement.....	
Lubrication system.....	
Carburetor.....	
Main jet.....	
Slow jet.....	
TRANSMISSION	
Transmission type.....	
Transmission speed.....	
Clutch.....	
Shift pattern.....	
CHASSIS	
Fuel tank capacity (Std).....	
Air filter type.....	
Front brake.....	
Rear brake.....	
Front tire.....	
Tire pressure.....	
Rear tire.....	
Tire pressure.....	
SERVICE/TUNING	
Ignition type.....	
Spark plug gap.....	
LUBRICATION	
Recommended fuel.....	
Engine oil - Pro Honda:	
GN4 10W40.....	
GN4 20W50.....	
Engine oil capacity:	
After draining.....	
After reassembly.....	
Coolant type.....	
Coolant ratio.....	
Capacity.....	
Fork oil:	
Pro Honda (5W SS-7).....	
Pro Honda (10W SS-8).....	

PC800'98 PACIFIC COAST (US MODEL)

SPECIFICATIONS

SECTION SUBJECT	PC800'96
ENGINE	
Cylinder.....	Specification Listings To Be Provided At A Later Date
Strokes.....	
Cooling.....	
Camshaft.....	
Valves per cylinder.....	
Displacement.....	
Lubrication system.....	
Carburetor.....	
Main jet.....	
Slow jet.....	
TRANSMISSION	
Transmission type.....	
Transmission speed.....	
Clutch.....	
Shift pattern.....	
CHASSIS	
Fuel tank capacity (Std).....	
Air filter type.....	
Front brake.....	
Rear brake.....	
Front tire.....	
Tire pressure.....	
Rear tire.....	
Tire pressure.....	
SERVICE/TUNING	
Ignition type.....	
Spark plug gap.....	
LUBRICATION	
Recommended fuel.....	
Engine oil - Pro Honda:	
GN4 10W40.....	
GN4 20W50.....	
Engine oil capacity:	
After draining.....	
After reassembly.....	
Coolant type.....	
Coolant ratio.....	
Capacity.....	
Fork oil:	
Pro Honda (5W SS-7).....	
Pro Honda (10W SS-8).....	

BULK HOSE

Construction of Fuel and Vacuum Hose Part Number

Exar 9 5 0 0 1 7 5 0 0 1 4 0 M

ROLL HOSE

All roll hose part numbers have an 'M' in this postion

Appearance code

Fuel Hose:

2 = Red, braided exterior
3 = Red
4 = Ash gray with red stripe, smooth exterior
5 = Black, braided exterior
6 = Black

Vinyl Hose:

1 = Clear
2 = Black
3 = Light Red
6 = Light Red
6 = Pale Black

Vacuum Hose:

1 = Ash Gray, smooth exterior
2 = Ash Gray, smooth exterior
3 = Black, smooth exterior
5 = Black

Length

Cut Hose length is in *Millimeters* (mm)
Bulk Hose length is in *Meters* (M)

Inside Diameter

Fuel and Vacuum Hose

35 = 3.5mm
45 = 4.5 mm
50 = 5.0mm
55 = 5.3 or 5.5mm
65 = 6.5mm
70 = 7.0mm
75 = 7.3 or 7.5mm
80 = 8.0mm
11 = 11mm
91 = 12 (outside dia 15)mm
92 = 12 (outside dia 16)mm
12 = 12 (outside dia 17)mm
14 = 14mm
17 = 17mm

ID/OD Code : Vinyl Hose

01 = ID. 2.9, OD. 6.8mm
03 = ID. 3.0, OD. 6.0mm
05 = ID. 3.5, OD. 6.5mm
07 = ID. 4.0, OD. 7.0mm
08 = ID. 4.5, OD. 6.5mm
09 = ID. 4.5, OD. 8.0mm
12 = ID. 5.0, OD. 7.0mm
10 = ID. 5.0, OD. 8.0mm
11 = ID. 5.0, OD. 9.0mm
14 = ID. 6.0, C37 = ID. 11.0, OD. 15.0mm
17 = ID. 7.0, C38 = ID. 12.0, OD. 13.0mm
19 = ID. 7.0, C39 = ID. 12.0, OD. 14.0mm
21 = ID. 8.0, C40 = ID. 12.0, OD. 16.0mm
23 = ID. 8.0, C43 = ID. 13.0, OD. 15.0mm
25 = ID. 9.0, C45 = ID. 14.0, OD. 18.0mm
27 = ID. 9.0, C50 = ID. 16.0, OD. 19.0mm
33 = ID. 10.0, C55 = ID. 17.0, OD. 20.5mm
36 = ID. 11.0, C60 = ID. 22.0, OD. 27.0mm

Hose Type:

1 = Fuel Hose
2 = Vinyl Hose
3 = Vacuum Hose

CAUTION: Never use vacuun / or vinyl hose in place of fuel hose or vice versa

C0MMONLY REQUIRED REPLACEMENT PARTS

9 = PC800'89 6 = PC800'96
0 = PC800'90 7 = PC800'97
4 = PC800'94 8 = PC800'98
5 = PC800'95

Ref. No.	DESCRIPTION	PC800 1989	1990	1994	1995	1996	1997	1998	AREA CODE	FRAME SERIAL NUMBER FROM	TO	QTY REQ	PART NUMBER	HONDA CODE
	BATTERY (YTX12-BS) (YUASA)	..	..	4	..	..	..	..	A	RM200803	.....	1	31500-HA0-688	4478491
	BATTERY (YTX12-BS) (YUASA)	..	..	4	..	..	..	..	A	.....	RM200802	1	31500-HA0-687	4147435
	BATTERY (YTX12-BS) (YUASA)	9	0	..	5	6	7	8		.....	.....	1	31500-HF1-677	4165290
	BATTERY (YTX12-BS) (YUASA)	9	0	..	..	..	..	..		.....	.....	1	31500-HA0-686	4176897
	BATTERY (YTX12-BS) (YUASA)	9	0	..	..	..	..	..		.....	.....	1	31500-HA0-685	3189677
		..	..	4	..	..	..	..	A	.....	RM200802	1	31500-HA0-686	4176897
		..	..	4	..	..	..	..	A	.....	.....	1	31500-HF1-677	4165290
		..	..	4	..	..	..	..	AC	RM200166	.....	1	31500-HA0-688	4478491
		..	..	4	..	..	..	..	AC	.....	RM200165	1	31500-HA0-687	4147435
		..	..	4	..	..	..	..	AC	.....	.....	1	31500-HF1-677	4165290
		..	..	4	..	..	..	..	AC	.....	.....	1	31500-HA0-686	4176897
		..	..	..	5	6	7	8		.....	.....	1	31500-HA0-688	4478491
	BULB, HEADLIGHT (H4 JA12V60/55W)	9	0	4	5	6	7	8		.....	.....	1	34901-MC7-601	1288612
	BULB, TAILIGHT (12V27/7W 2057HD)	9	0	4	5	6	7	8		.....	.....	2	34906-MG9-771	1700301
	BULB, TURN SIGNAL (12V 23W)	9	0	4	5	6	7	8		.....	.....	2	34905-268-671	0145318
	DISK, CLUTCH FRICTION	9	0	4	5	6	7	8		.....	.....	2	22201-MM5-000	3143401
	DISK, CLUTCH FRICTION	..	..	4	5	6	7	8		.....	.....	5	22201-MY3-000	3939782
	DISK, CLUTCH FRICTION	9	0	..	..	..	..	..		.....	.....	5	22201-MJ1-761	3137460
	FILTER, OIL	9	0	4	5	6	7	8		.....	.....	1	15410-MM9-405	5313648
	FILTER, OIL (TOYO)	9	0	4	5	6	7	8		.....	.....	1	15410-MM9-013	4038923
	FILTER, OIL (TOYO)	9	0	..	..	..	..	..		.....	.....	1	15410-MM9-003	2605618
	FUSE COMP., SPARE	9	0	4	5	6	..	..		.....	.....	1	38210-MR5-000	3138617
	FUSE F (10A) (MINI)	..	..	..	..	..	7	8		.....	.....	6	98200-41000	4853420
	FUSE, BLADE (10A)	9	0	4	5	6	..	..		.....	.....	4	98200-31000	1644228
	FUSE, BLADE (15A)	9	0	4	5	6	..	..		.....	.....	2	98200-31500	1644244
	FUSE, BLADE (30A)	9	0	4	5	6	7	8		.....	.....	2	98200-33000	1644251
	GASKET, SET	9	0	4	5	6	7	8		.....	.....	2	16010-MR5-671	3142072
	GASKET, EX. PIPE	9	0	..	..	..	..	..		.....	.....	2	18291-ME9-000	1367929
	GASKET, EX. PIPE	..	..	4	5	6	7	8		.....	.....	2	18291-MR5-801	4533972
	GASKET, EX. PIPE	9	0	..	..	..	..	..		.....	.....	2	18291-MM8-880	3971652
	GASKET, EX. PIPE	9	0	..	..	..	..	..		.....	.....	2	18291-ME9-306	4367686
	GASKET, EX. PIPE	..	..	4	5	6	7	8		.....	.....	2	18291-MR5-801	4533972
	GASKET, EX. PIPE	9	0	..	..	..	..	..		.....	.....	2	18291-MM8-880	3971652

C0MMONLY REQUIRED REPLACEMENT PARTS

9 = PC800'89 6 = PC800'96
0 = PC800'90 7 = PC800'97
4 = PC800'94 8 = PC800'98
5 = PC800'95

Ref. No.	DESCRIPTION	PC800 1989	1990	1994	1995	1996	1997	1998	AREA CODE	FRAME SERIAL NUMBER FROM	TO	QTY REQ	PART NUMBER	HONDA CODE
	GASKET, EX. PIPE	9	0	..	..	..	..	..		.....	.....	2	18291-ME9-306	4367686
	GASKET, EX. PIPE	9	0	..	..	..	..	..		.....	.....	2	18291-ME9-000	1367929
	GRIP, L. HANDLE	9	0	4	5	6	7	8		.....	.....	1	53166-MR5-000	3139888
	GRIP, R. HANDLE	9	0	4	5	6	7			.....	.....	1	53165-MR5-000	3139870
	HANDLEBAR	..	0	4	5	6	7	8		.....	.....	1	53100-MR5-870	3347853
	HANDLEBAR	9	..	..	..	..	..	..		.....	.....	1	53100-MR5-000	3139797
	HEADLIGHT UNIT	9	0	4	5	6	7	8		.....	.....	1	33102-MR5-671	3138120
	KEY, BLANK (TYPE 1)	9	0	4	5	6	7	8		.....	.....	1	35121-KW3-771	3029840
	KEY, BLANK (TYPE 2)	9	0	4	5	6	7	8		.....	.....	1	35122-KW3-771	3029857
	MIRROR, L.	9	0	4	5	6	7	8		.....	.....	1	88121-MR5-003	3141264
	MIRROR, R.	9	0	4	5	6	7	8		.....	.....	1	88111-MR5-003	3141207
	SPARK PLUG (DPR6EA-9) (NGK)	9	0	4	5	6	7	8		.....	.....	2	98069-56916	1938646
	SPARK PLUG (DPR6EA-9) (NGK)	9	0	4	5	6	7	8		.....	.....	2	98069-56916	1938646
	SPARK PLUG (DPR7EA-9) (NGK)	9	0	4	5	6	7	8		.....	.....	2	98069-57916	1103076
	SPARK PLUG (DPR7EA-9) (NGK)	9	0	4	5	6	7	8		.....	.....	2	98069-57916	1103076
	SPARK PLUG (DPR8EA-9) (NGK)	9	0	4	5	6	7	8		.....	.....	2	98069-58916	1103084
	SPARK PLUG (DPR8EA-9) (NGK)	9	0	4	5	6	7	8		.....	.....	2	98069-58916	1103084
	SPARK PLUG (X20EPR-U9)	9	0	4	5	6	7	8		.....	.....	2	98069-56926	1938653
	SPARK PLUG (X20EPR-U9)	9	0	4	5	6	7	8		.....	.....	2	98069-56926	1938653
	SPARK PLUG (X22EPR-U9) (ND)	9	0	4	5	6	7	8		.....	.....	2	98069-57926	1096817
	SPARK PLUG (X22EPR-U9) (ND)	9	0	4	5	6	7	8		.....	.....	2	98069-57926	1096817
	SPARK PLUG (X24EPR-U9) (ND)	9	0	4	5	6	7	8		.....	.....	2	98069-58926	1096825
	SPARK PLUG (X24EPR-U9) (ND)	9	0	4	5	6	7	8		.....	.....	2	98069-58926	1096825
	TIRE, FR. (120/80-17)	..	..	..	5	6	7	8		.....	.....	1	44711-MR5-871	4795936
	TIRE, FR. (120/80-17) (61H K555F) (DUNLOP) (61H K177F) (U.S. DUNLOP)	..	..	..	5	6	7	8		.....	.....	1	44711-MR5-005	4795928
	TIRE, FR. (120/80-17) (61V) (DUNLOP)	..	..	..	5	6	7	8		.....	.....	1	44711-MZ5-004	4763777
	TIRE, RR. (140/80-15)	9	0	4	..	..	..	..		.....	.....	1	42711-MR5-005	4795837
	TIRE, RR. (140/80-15)	..	..	..	5	6	7	8		.....	.....	1	42711-MR5-871	4795845
	TIRE, RR. (140/80-15)	..	..	..	5	6	7	8		.....	.....	1	42711-MR5-005	4795837

C0MMONLY REQUIRED REPLACEMENT PARTS

9 = PC800'89 6 = PC800'96
0 = PC800'90 7 = PC800'97
4 = PC800'94 8 = PC800'98
5 = PC800'95

Ref. No.	DESCRIPTION	PC800 1989	1990	1994	1995	1996	1997	1998	AREA CODE	FRAME SERIAL NUMBER FROM	TO	QTY REQ	PART NUMBER	HONDA CODE
	TIRE, RR. (140/80-15) (67H K177)													
	(U.S. DUNLOP) (67H K555)													
	(DUNLOP) (67H K555)	..	0	4	..	..	..	..		.....	.....	1	42711-MR5-871	479845

CONTENTS BY PAGE NO. SEQUANCE

PAGE TITLE	PAGE	GRID
CYLINDER HEAD COVER	2	C1
FRONT CYLINDER HEAD	4	C2
REAR CYLINDER HEAD	6	C3
VALVE	8	C4
CAM CHAIN	10	C5
CYLINDER	11	C5
RIGHT CRANKCASE COVER	12	C6
CLUTCH	13	C6
STARTING DRIVEN GEAR	15	C7
ALTERNATOR	17	C8
LEFT CRANKCASE SOVER	19	C9
STARTER MOTOR	22	C11
OIL PUMP	24	C12
CRANKCASE	26	D1
CRANKSHAFT	30	D3
TRANSMISSION	32	D4
GEARSHIFT DRUM	34	D5
WATER PIPE	36	D6
CROSS SHAFT	37	D6
CARBURETOR ASSY	40	D8
CARBURETOR COMPONENTS	42	D9
GASKET KIT A	44	D10
GASKET KIT B	46	D11
HEADLIGHT	48	E1
METER PANEL	50	E2
METERS	54	E4
HANDLE SWITCH	57	E5
FR. BRAKE MASTER CYLINDER	60	E7
CLUTCH MASTER CYLINDER	63	E8
HANDLEBAR	66	E10
STEERING STEM	70	E12
FRONT FENDER-89-96	72	F1
FRONT FENDER-97-98	73	F1
FRONT FORK	74	F2
FRONT BRAKE CALIPER	77	F3
FRONT DISK COVER	80	F5
FRONT WHEEL	82	F6
REAR BRAKE PANEL	84	F7
REAR WHEEL	86	F8
FINAL DRIVEN GEAR	88	F9
SHELTER	92	F11
SEAT	94	F12
FUEL TANK	96	G1
AIR CLEANER	99	G2
SIDE COVER	100	G3
MUFFLER	103	G4
PEDAL	106	G6
STEP	108	G7
SWING ARM	112	G9
REAR SHOCK ABSORBER	114	G10
REAR FENDER	116	G11
TURN SIGNAL	118	G12
TAILLIGHT	120	H1
BATTERY	121	H1
IGNITION COIL	123	H2
WIRE HARNESS	125	H3
RADIATOR	127	H4
RESERVE TANK	130	H6
FRAME	131	H6
TOOLS	134	H6
WIND SCREEN	136	H9
FAIRING	140	H11
COWL STAY	146	I2
TRUNK LID	148	I3
TRUNK INNER BODY	151	I4
CANISTER (AC)	155	I6
CAUTION LABEL	157	I7
MARK	160	I9

CONTENTS IN ALPHABETICAL ORDER

PAGE TITLE	PAGE	GRID
AIR CLEANER	99	G2
ALTERNATOR	17	C8
BATTERY	121	H1
CAM CHAIN	10	C5
CANISTER (AC)	155	I6
CARBURETOR ASSY	40	D8
CARBURETOR COMPONENTS	42	D9
CAUTION LABEL	157	I7
CLUTCH	13	C6
CLUTCH MASTER CYLINDER	63	E8
COWL STAY	146	I2
CRANKCASE	26	D1
CRANKSHAFT	30	D3
CROSS SHAFT	37	D6
CYLINDER	11	C5
CYLINDER HEAD COVER	2	C1
FAIRING	140	H11
FINAL DRIVEN GEAR	88	F9
FR. BRAKE MASTER CYLINDER	60	E7
FRAME	131	H6
FRONT BRAKE CALIPER	77	F3
FRONT CYLINDER HEAD	4	C2
FRONT DISK COVER	80	F5
FRONT FENDER-89-96	72	F1
FRONT FENDER-97-98	73	F1
FRONT FORK	74	F2
FRONT WHEEL	82	F6
FUEL TANK	96	G1
GASKET KIT A	44	D10
GASKET KIT B	46	D11
GEARSHIFT DRUM	34	D5
HANDLE SWITCH	57	E5
HANDLEBAR	66	E10
HEADLIGHT	48	E1
IGNITION COIL	123	H2
LEFT CRANKCASE COVER	19	C9
MARK	160	I9
METER PANEL	50	E2
METERS	54	E4
MUFFLER	103	G4
OIL PUMP	24	C12
PEDAL	106	G6
RADIATOR	127	H4
REAR BRAKE PANEL	84	F7
REAR CYLINDER HEAD	6	C3
REAR FENDER	116	G11
REAR SHOCK ABSORBER	114	G10
REAR WHEEL	86	F8
RESERVE TANK	130	H6
RIGHT CRANKCASE COVER	12	C6
SEAT	94	F12
SHELTER	92	F11
SIDE COVER	100	G3
STARTER MOTOR	22	C11
STARTING DRIVEN GEAR	15	C7
STEERING STEM	70	E12
STEP	108	G7
SWING ARM	112	G9
TAILLIGHT	120	H1
TOOLS	134	H6
TRANSMISSION	32	D4
TRUNK INNER BODY	151	I4
TRUNK LID	148	I3
TURN SIGNAL	118	G12
VALVE	8	C4
WATER PIPE	36	D6
WIND SCREEN	136	H9
WIRE HARNESS	125	H3

CYLINDER HEAD COVER

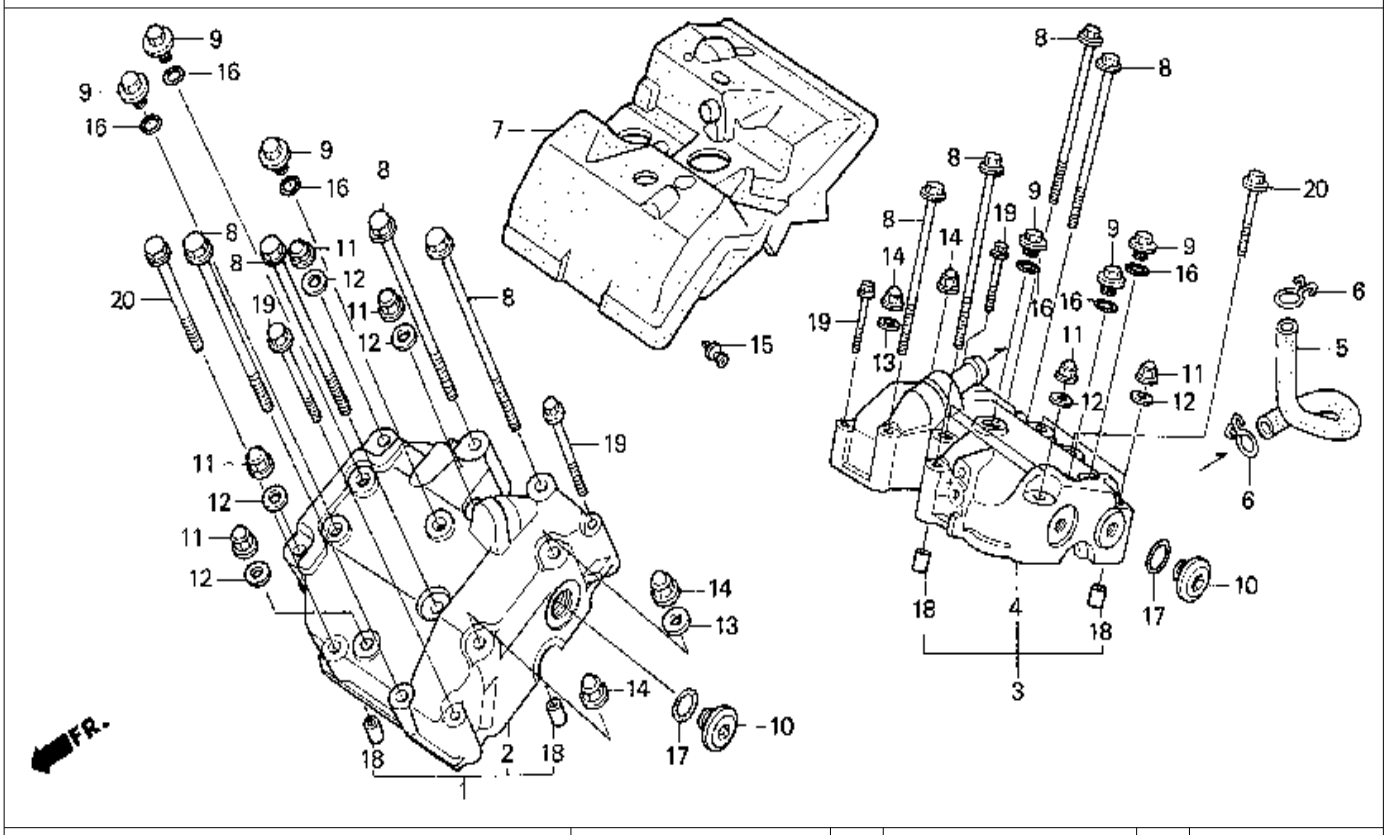

9 = PC800'89
0 = PC800'90
4 = PC800'94
5 = PC800'95
6 = PC800'96
7 = PC800'97
8 = PC800'98

Ref. No.	BLOCK NO. E-1 / DESCRIPTION	PC800 1989	1990	1994	1995	1996	1997	1998	AREA CODE	FRAME SERIAL NUMBER FROM	TO	QTY REQ	PART NUMBER
1	COVER, FR. CYLINDER HEAD	..	..	..	..	..	7	8		.....	.....	1	12310-MR5-A30
2	COVER, FR. CYLINDER HEAD	9	0	4	5	6	..	..		.....	.....	1	12310-MR5-670
3	COVER, RR. CYLINDER HEAD	..	..	..	..	..	7	8		.....	.....	1	12320-MR5-A30
4	COVER, RR. CYLINDER HEAD	9	0	4	5	6	..	..		.....	.....	1	12320-MR5-670
5	TUBE, BREATHER	9	0	4	5	6	7	8		.....	.....	1	17225-MR5-000
6	CLIP, SUB-TANK HOSE	9	0	4	5	6	7	8		.....	.....	2	17224-102-700
7	COVER, ENGINE TOP	9	0	4	5	6	7	8		.....	.....	1	19610-MR5-000
8	BOLT, FLANGE (8X150)	9	0	4	5	6	7	8		.....	.....	8	90015-MG8-000
9	BOLT, SEALING (14MM)	9	0	4	5	6	7	8		.....	.....	6	90047-MK7-671
10	BOLT, SEALING (22MM)	9	0	4	5	6	7	8		.....	.....	6	90048-MR5-670
11	NUT, FLANGE CAP (10MM)	9	0	4	5	6	7	8		.....	.....	8	90202-329-000
12	WASHER, SEALING (10MM)	9	0	4	5	6	..	..		.....	.....	8	90403-MR5-670
	WASHER, SEALING (10MM)	..	..	..	..	..	7	8		.....	.....	8	90403-ML4-610
13	WASHER, SEALING (8MM)	9	0	4	5	6	7	8		.....	.....	2	90441-MG8-000
14	NUT, CAP (8MM)	9	0	4	5	6	7	8		.....	.....	4	90443-107-000
15	RIVET, SCREW	9	0	4	5	6	7	8		.....	.....	6	90658-KM1-003

 © AMERICAN HONDA MOTOR CO. INC. 1997

CYLINDER HEAD COVER

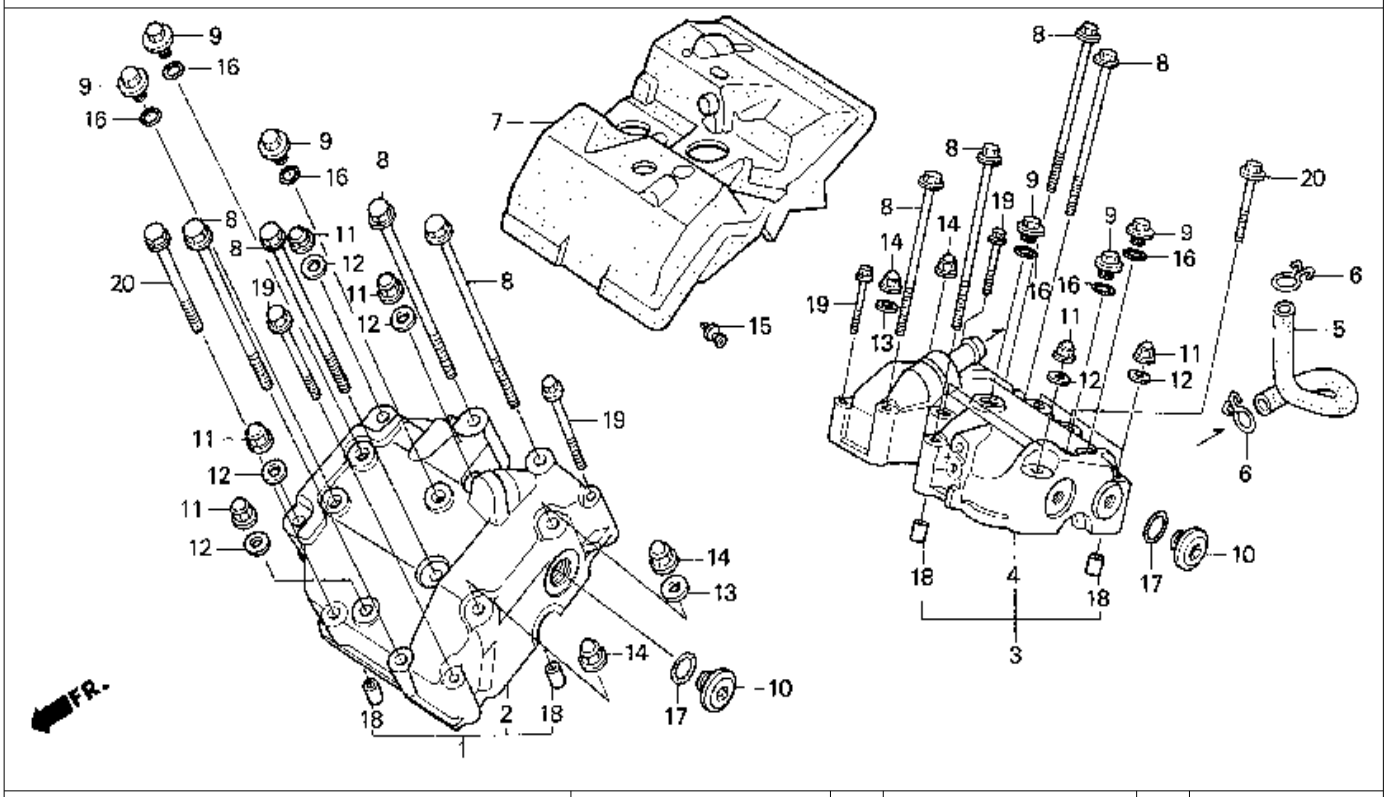

9 = PC800'89
0 = PC800'90
4 = PC800'94
5 = PC800'95
6 = PC800'96
7 = PC800'97
8 = PC800'98

Ref. No.	BLOCK NO. E-1 / DESCRIPTION	1989	1990	1994	1995	1996	1997	1998	AREA CODE	FRAME SERIAL NUMBER FROM	FRAME SERIAL NUMBER TO	QTY REQ	PART NUMBER
16	O-RING (13.8X1.9)	9	0	4	5	6	7	8		.....	.....	6	91301-KJ9-000
	O-RING (13.8X1.9)	9	0	4	5	6	7	8		.....	.....	6	91301-PC0-003
17	O-RING (21.6X2)	9	0	4	5	6	7	8		.....	.....	6	91310-MB0-003
18	PIN A, DOWEL (14X20)	..	..	..	..	..	7	8		.....	.....	4	94301-14200
19	BOLT, FLANGE (6X55)	9	0	4	5	6	7	8		.....	.....	4	95701-06055-00
20	BOLT, FLANGE (8X55)	9	0	4	5	6	7	8		.....	.....	2	95701-08055-00

 © AMERICAN HONDA MOTOR CO. INC. 1997 C1

FRONT CYLINDER HEAD

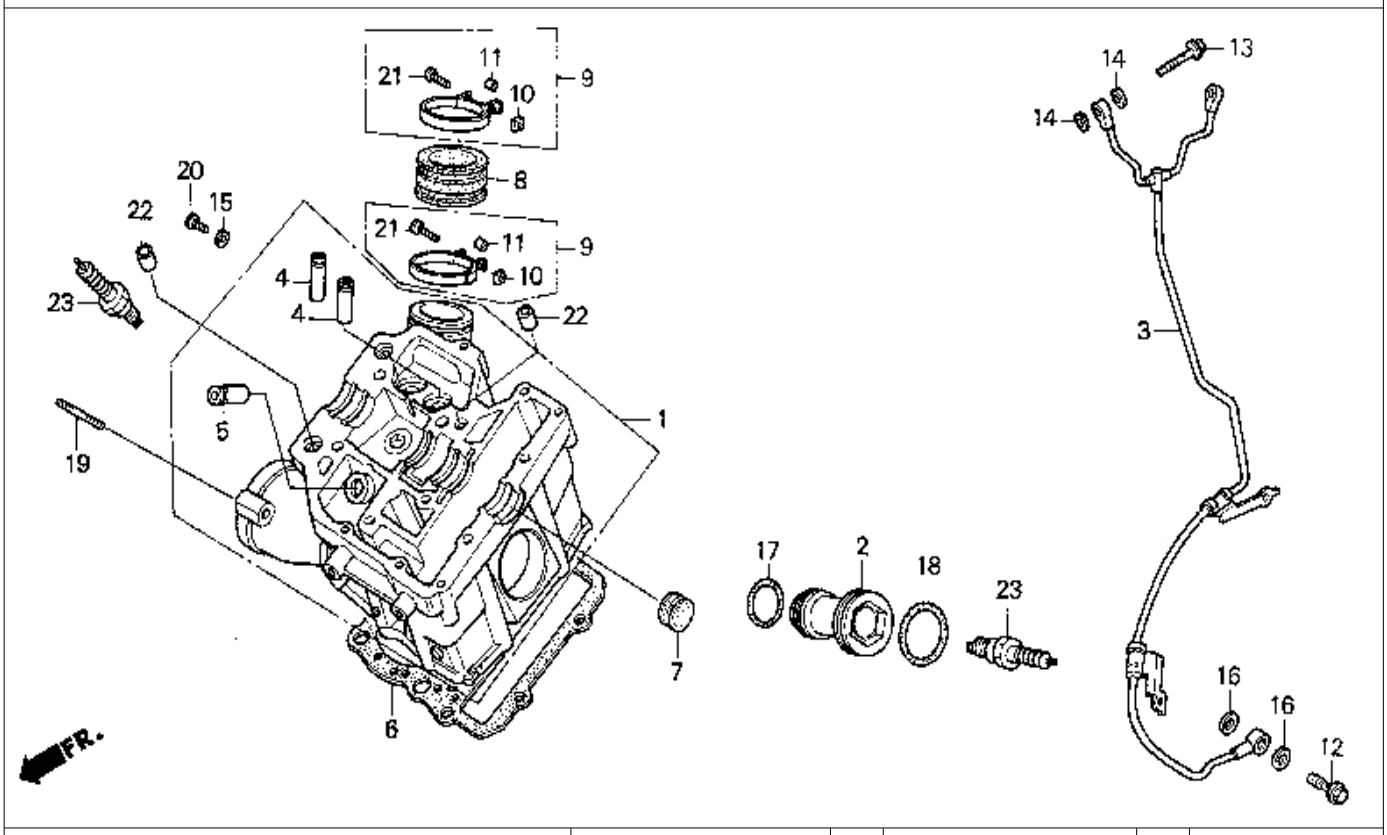

9 = PC800'89 6 = PC800'96
0 = PC800'90 7 = PC800'97
4 = PC800'94 8 = PC800'98
5 = PC800'95

Ref. No.	BLOCK NO. E-2 / DESCRIPTION	PC800 1989	1990	1994	1995	1996	1997	1998	AREA CODE	FRAME SERIAL NUMBER FROM	TO	QTY REQ	PART NUMBER
1	CYLINDER HEAD COMP., FR.	9	0	4	5	6	7	8		.....	.....	1	12210-MR5-670
2	SLEEVE, PLUG	9	0	4	5	6	7	8		.....	.....	1	12225-ME9-000
3	PIPE A, OIL PATH	9	0	4	5	6	7	8		.....	.....	1	12230-MR5-670
4	GUIDE, IN. VALVE	9	0	4	5	6	7	8		.....	.....	2	12231-MG8-305
5	GUIDE, EX. VALVE	9	0	4	5	6	7	8		.....	.....	1	12233-MG8-305
	GUIDE, IN VALVE	9	0	4	5	6	7	8		.....	.....	1	12233-MG8-405
6	GASKET, CYLINDER HEAD	9	0	4	5	6	7	8		.....	.....	1	12251-MR5-670
7	PLUG, CAMSHAFT	9	0	4	5	6	7	8		.....	.....	2	12312-ME9-750
8	INSULATOR, CARBURETOR	9	0	4	5	6	7	8		.....	.....	1	16211-MR5-670
9	BAND, INSULATOR	9	..	..	..	..	..	..		.....	.....	2	16219-MR5-670
	BAND, INSULATOR	..	0	4	5	6	7	8		.....	.....	2	16219-MR5-870
10	NUT, SQUARE (5MM)	9	0	4	5	6	7	8		.....	.....	2	16222-MR5-670
11	COLLAR	9	..	..	..	..	..	..		.....	.....	2	16223-MR5-670
	COLLAR	..	0	4	5	6	7	8		.....	.....	2	16223-MR5-870
12	BOLT, OIL CONTROL	9	0	4	5	6	7	8		.....	.....	1	90046-MR5-670
13	BOLT, SPECIAL (7X38)	9	0	4	5	6	7	8		.....	.....	2	90130-MK7-671

 © AMERICAN HONDA MOTOR CO. INC. 1997

FRONT CYLINDER HEAD

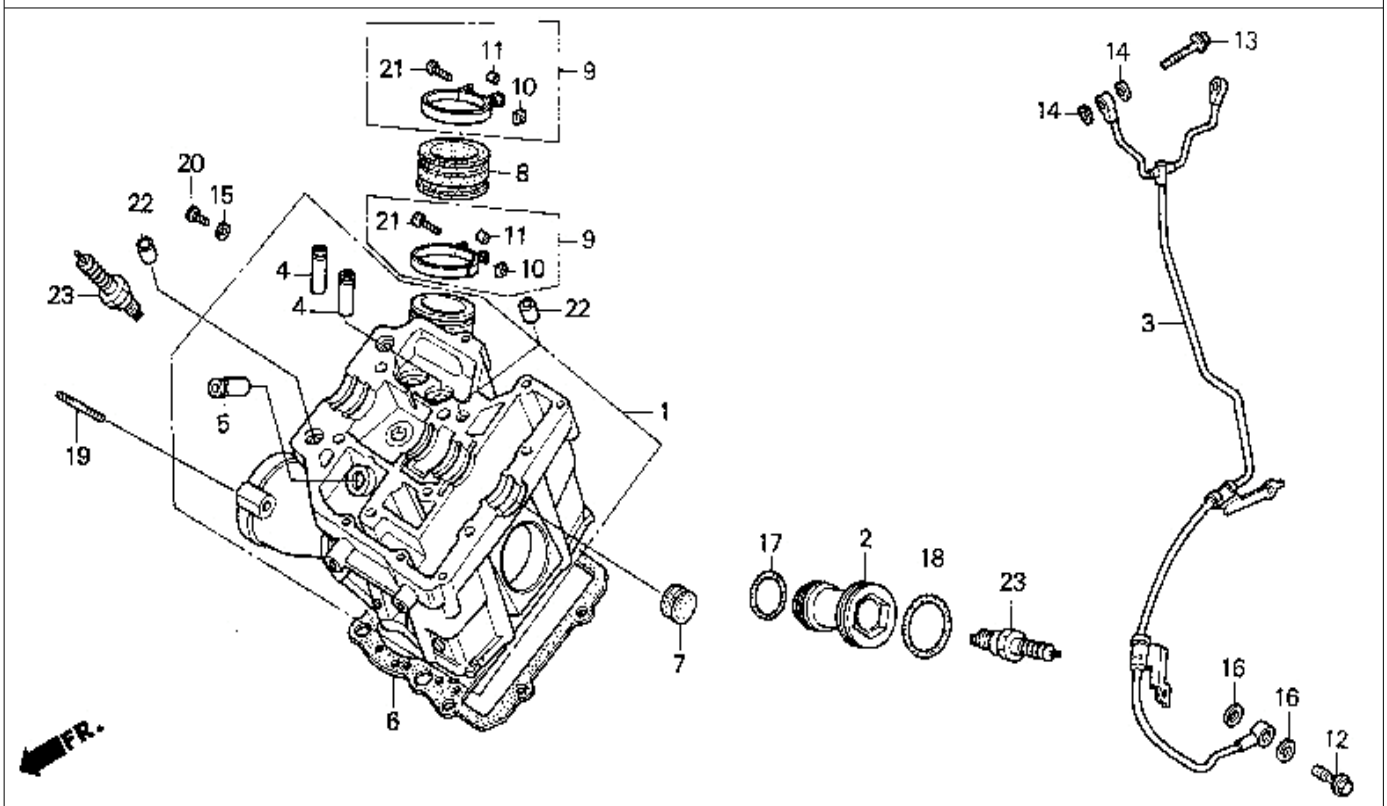

9 = PC800'89 6 = PC800'96
0 = PC800'90 7 = PC800'97
4 = PC800'94 8 = PC800'98
5 = PC800'95

Ref. No.	BLOCK NO. E-2 / DESCRIPTION	PC800 1989	1990	1994	1995	1996	1997	1998	AREA CODE	FRAME SERIAL NUMBER FROM	TO	QTY REQ	PART NUMBER
14	WASHER, SEALING (7MM)	9	0	4	5	6	7	8		.....	.....	4	90441-MC0-000
15	WASHER, THRUST (5MM)	9	0	4	5	6	7	8		.....	.....	1	90452-323-000
16	WASHER, OIL BOLT	9	0	4	5	6	7	8		.....	.....	2	90545-300-000
17	O-RING (27.4X2.4)	9	0	4	5	6	7	8		.....	.....	1	91304-MG7-003
18	O-RING (35.3X2.4) (NOK)	9	0	4	5	6	7	8		.....	.....	1	91351-MG7-004
19	BOLT 2, STUD (8X28)	9	..	..	..	..	..	..		.....	2000521	2	92900-08028-0E
	BOLT 2, STUD (8X32)	9	..	..	..	..	..	..		2000522	.....	2	92900-08032-0E
		..	0	..	..	..	..	..		.....	.....	2	92900-08032-0E
	BOLT 2, STUD (8X35)	..	..	4	5	6	7	8		.....	.....	2	92900-08035-0B
	BOLT, STUD (8X35)	..	..	4	5	6	7	8		.....	.....	2	92900-08035-0E
20	SCREW, PAN (5X8)	9	0	4	5	6	7	8		.....	.....	1	93500-05008-0A
21	SCREW, PAN (5X20)	9	0	4	5	6	7	8		.....	.....	2	93500-05020-0G
22	PIN A, DOWEL (14X20)	9	0	4	5	6	7	8		.....	.....	2	94301-14200
23	SPARK PLUG (DPR6EA-9) (NGK)	9	0	4	5	6	7	8		.....	.....	(2)	98069-56916
	SPARK PLUG (X20EPR-U9) (ND)	9	0	4	5	6	7	8		.....	.....	(2)	98069-56926
	SPARK PLUG (DPR7EA-9) (NGK)	9	0	4	5	6	7	8		.....	.....	2	98069-57916
	SPARK PLUG (X22EPR-U9) (ND)	9	0	4	5	6	7	8		.....	.....	2	98069-57926
	SPARK PLUG (DPR8EA-9) (NGK)	9	0	4	5	6	7	8		.....	.....	(2)	98069-58916
	SPARK PLUG (X24EPR-U9) (ND)	9	0	4	5	6	7	8		.....	.....	(2)	98069-58926

 © AMERICAN HONDA MOTOR CO. INC. 1997

REAR CYLINDER HEAD

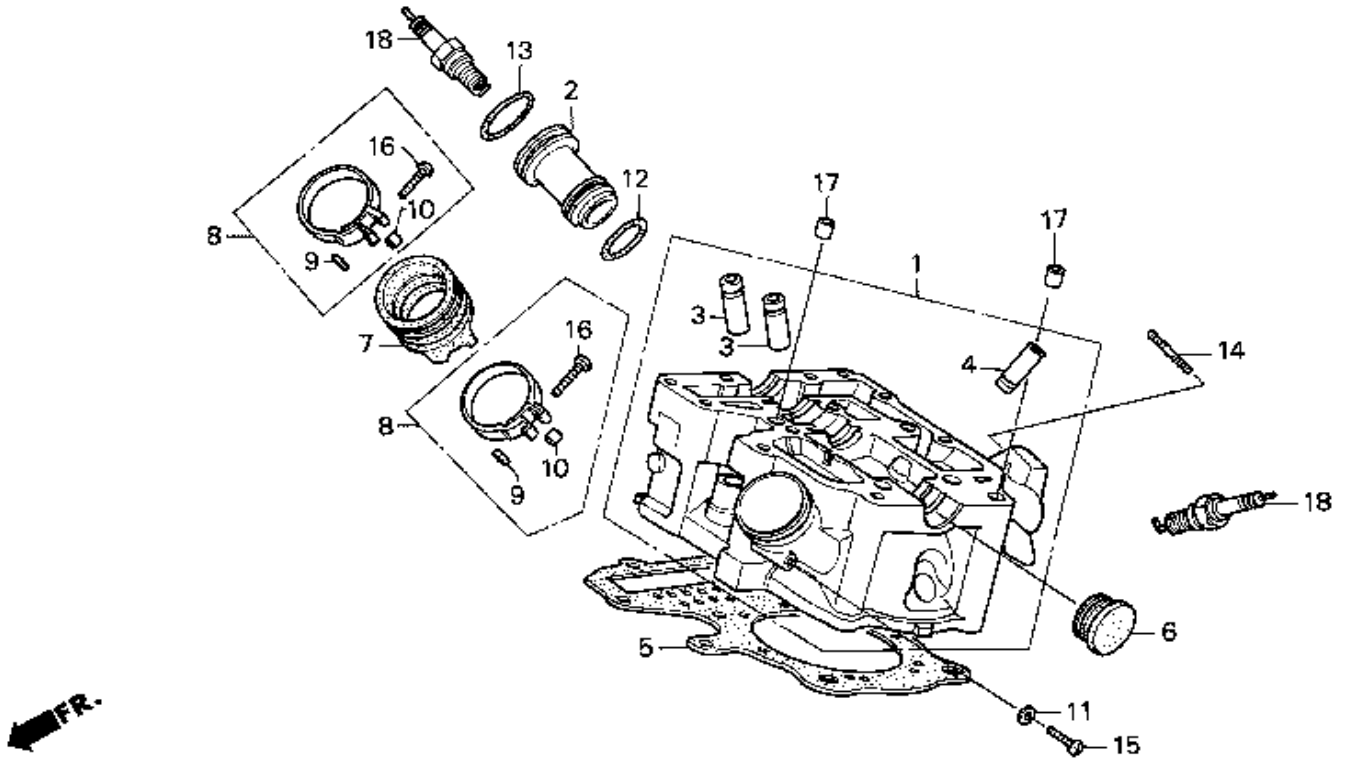

9 = PC800'89 6 = PC800'96
0 = PC800'90 7 = PC800'97
4 = PC800'94 8 = PC800'98
5 = PC800'95

Ref. No.	BLOCK NO. E-2-1 DESCRIPTION	PC800 1989	1990	1994	1995	1996	1997	1998	AREA CODE	FRAME SERIAL NUMBER FROM	TO	QTY REQ	PART NUMBER
1	CYLINDER HEAD COMP., RR	9	..	..	..	..	..	..		.....	.....	1	12220-MR5-670
	CYLINDER HEAD COMP., RR	..	0	4	5	6	7	8		.....	.....	1	12220-MR5-870
2	SLEEVE, PLUG	9	0	4	5	6	7	8		.....	.....	1	12225-ME9-000
3	GUIDE, IN. VALVE	9	0	4	5	6	7	8		.....	.....	2	12231-MG8-305
4	GUIDE, EX. VALVE	9	0	4	5	6	7	8		.....	.....	1	12233-MG8-305
	GUIDE, IN VALVE	9	0	4	5	6	7	8		.....	.....	1	12233-MG8-405
5	GASKET, CYLINDER HEAD	9	0	4	5	6	7	8		.....	.....	1	12251-MR5-670
6	PLUG, CAMSHAFT	9	0	4	5	6	7	8		.....	.....	2	12312-ME9-750
7	INSULATOR, CARBURETOR	9	0	4	5	6	7	8		.....	.....	1	16211-MR5-670
8	BAND, INSULATOR	9	..	..	..	..	..	..		.....	.....	2	16219-MR5-670
	BAND, INSULATOR	..	0	4	5	6	7	8		.....	.....	2	16219-MR5-870
9	NUT, SQUARE (5MM)	9	0	4	5	6	7	8		.....	.....	2	16222-MR5-670
10	COLLAR	9	..	..	..	..	..	..		.....	.....	2	16223-MR5-670
	COLLAR	..	0	4	5	6	7	8		.....	.....	2	16223-MR5-870
11	WASHER, THRUST (5MM)	9	0	4	5	6	7	8		.....	.....	1	90452-323-000
12	O-RING (27.4X2.4)	9	0	4	5	6	7	8		.....	.....	1	91304-MG7-003

 © AMERICAN HONDA MOTOR CO. INC. 1997 C3

REAR CYLINDER HEAD

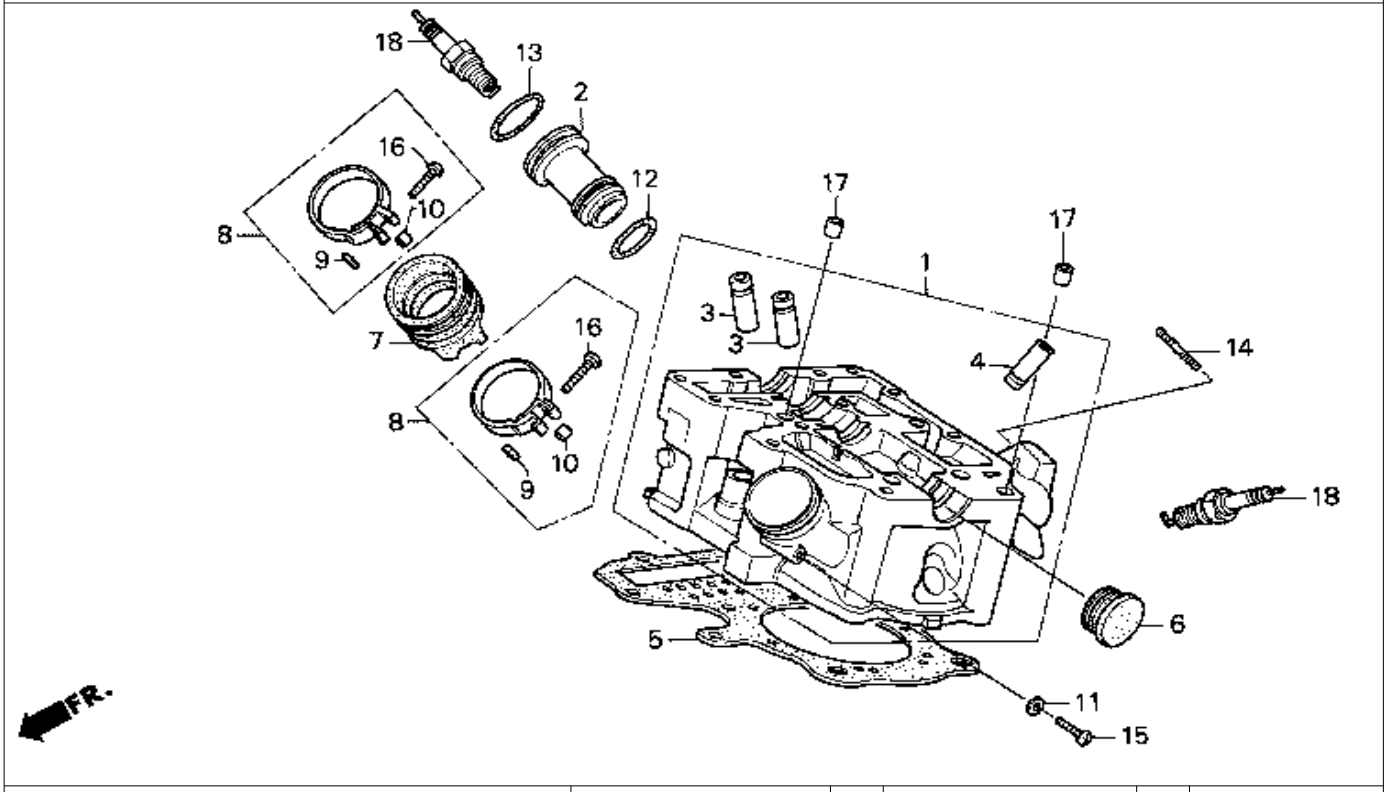

9 = PC800'89 6 = PC800'96
0 = PC800'90 7 = PC800'97
4 = PC800'94 8 = PC800'98
5 = PC800'95

Ref. No.	BLOCK NO. E-2-1 / DESCRIPTION	PC800 1989	1990	1994	1995	1996	1997	1998	AREA CODE	FRAME SERIAL NUMBER FROM	TO	QTY REQ	PART NUMBER
13	O-RING (35.3X2.4) (NOK)	9	0	4	5	6	7	8		.....	.....	1	91351-MG7-004
14	BOLT 2, STUD (8X28)	9	..	..	..	..	..	..		.....	2000521	2	92900-08028-0E
	BOLT 2, STUD (8X32)	9	..	..	..	..	..	..		2000522	.....	2	92900-08032-0E
	BOLT, STUD	..	0	4	5	6	7	8		.....	.....	2	90035-MR5-870
15	SCREW, PAN (5X8)	9	0	4	5	6	7	8		.....	.....	1	93500-05008-0A
16	SCREW, PAN (5X20)	9	0	4	5	6	7	8		.....	.....	1	93500-05020-0G
17	PIN A, DOWEL (14X20)	9	0	4	5	6	7	8		.....	.....	2	94301-14200
18	SPARK PLUG (DPR6EA-9) (NGK)	9	0	4	5	6	7	8		.....	.....	(2)	98069-56916
	SPARK PLUG (X20EPR-U9) (ND)	9	0	4	5	6	7	8		.....	.....	(2)	98069-56926
	SPARK PLUG (DPR7EA-9) (NGK)	9	0	4	5	6	7	8		.....	.....	2	98069-57916
	SPARK PLUG (X22EPR-U9) (ND)	9	0	4	5	6	7	8		.....	.....	2	98069-57926
	SPARK PLUG (DPR8EA-9) (NGK)	9	0	4	5	6	7	8		.....	.....	(2)	98069-58916
	SPARK PLUG (X24EPR-U9) (ND)	9	0	4	5	6	7	8		.....	.....	(2)	98069-58926

 © AMERICAN HONDA MOTOR CO. INC. 1997

VALVE

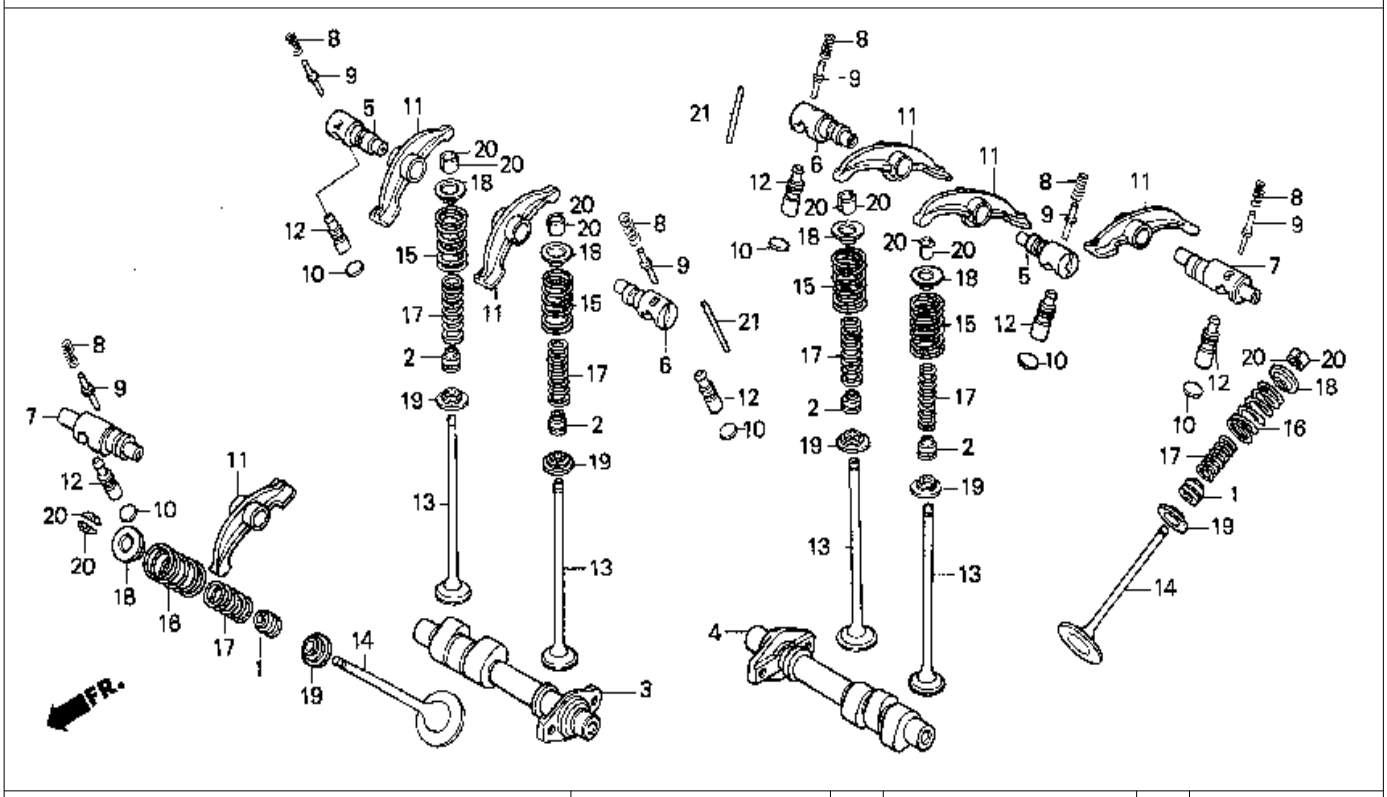

9 = PC800'89
0 = PC800'90
4 = PC800'94
5 = PC800'95
6 = PC800'96
7 = PC800'97
8 = PC800'98

Ref. No.	BLOCK NO. E-3 / DESCRIPTION	1989 9	1990 0	1994 4	1995 5	1996 6	1997 7	1998 8	AREA CODE	FRAME SERIAL NUMBER FROM	FRAME SERIAL NUMBER TO	QTY REQ	PART NUMBER
1	SEAL, VALVE STEM (ARAI)	9	0	4	5	6	7	8		.....	.....	2	12209-413-003
2	SEAL, VALVE STEM (ARAI)	9	0	4	5	6	7	8		.....	.....	4	12212-MR5-671
3	CAMSHAFT, FR.	9	0	4	5	6	7	8		.....	.....	1	14110-MR5-670
4	CAMSHAFT, RR.	9	0	4	5	6	7	8		.....	.....	1	14120-MR5-670
5	SHAFT B, ROCKER ARM	9	0	4	5	6	7	8		.....	.....	2	14451-MR6-670
6	SHAFT A, ROCKER ARM	9	0	4	5	6	7	8		.....	.....	2	14452-MR6-670
7	SHAFT C, ROCKER ARM	9	0	4	5	6	7	8		.....	.....	2	14453-MR6-670
8	SPRING, TAPPET ADJUSTING ASSIST	9	0	4	5	6	7	8		.....	.....	6	14461-MK7-670
9	SHAFT, TAPPET ADJUSTING ASSIST	9	0	4	5	6	7	8		.....	.....	6	14462-ME9-020
10	SHIM, TAPPET ADJUSTING (0.5)	9	0	4	..	..	..	..		.....	.....	AR	14466-ME9-000
		..	..	..	5	6	7	8		.....	.....	6	14466-ME9-000
	SHIM, TAPPET ADJUSTING (1.0)	9	0	4	..	..	..	..		.....	.....	AR	14467-ME9-000
		..	..	..	5	6	7	8		.....	.....	6	14467-ME9-000
11	ARM, VALVE ROCKER	9	0	4	5	6	7	8		.....	.....	6	14611-MR5-670
12	ADJUSTER COMP., HYDRAULIC LASHER	9	0	4	5	6	7	8		.....	.....	6	14630-ME9-003
13	VALVE, IN.	9	0	4	5	6	7	8		.....	.....	4	14711-MR5-670

 © AMERICAN HONDA MOTOR CO. INC. 1997 C4

AR AS REQUIRED

VALVE

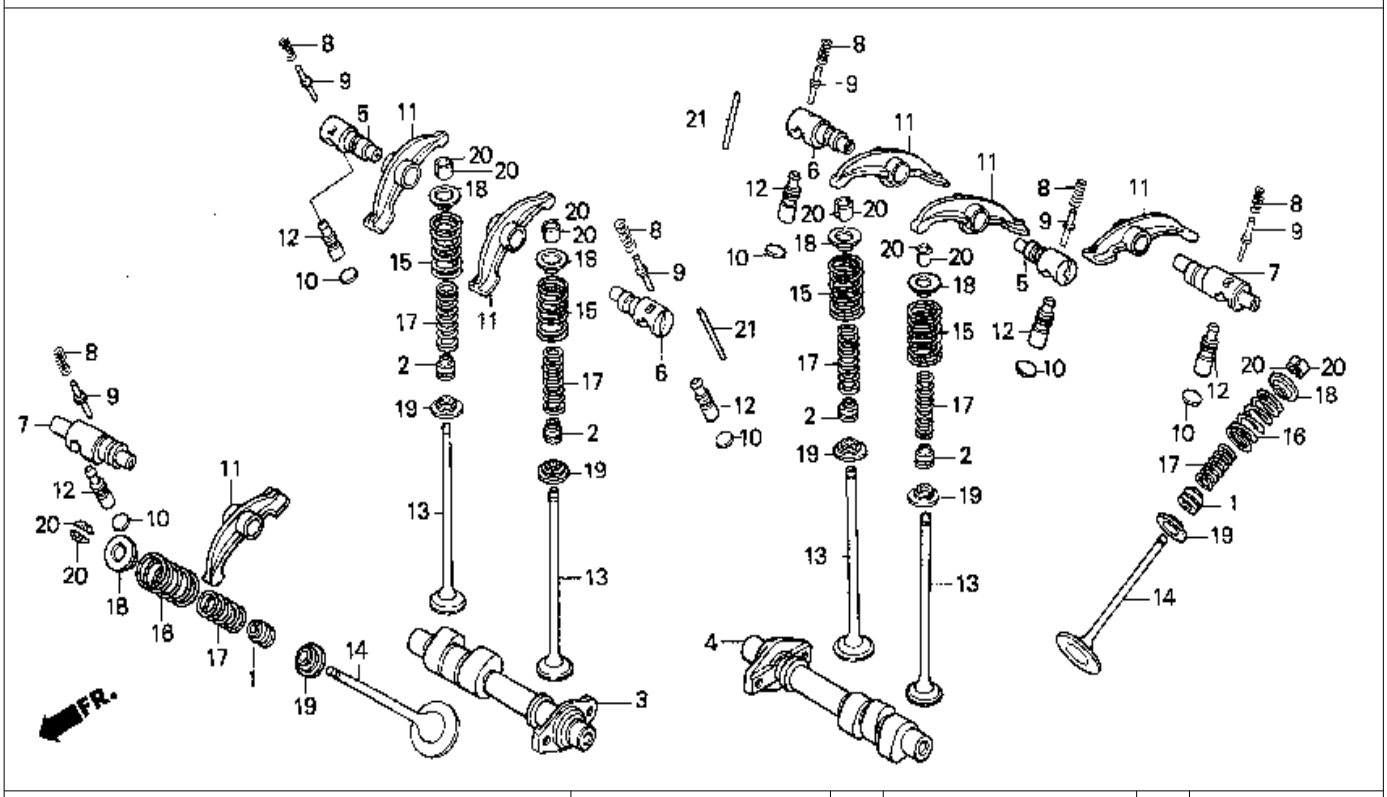

9 = PC800'89
0 = PC800'90
4 = PC800'94
5 = PC800'95
6 = PC800'96
7 = PC800'97
8 = PC800'98

Ref. No.	BLOCK NO. E-3 / DESCRIPTION	1989 9	1990 0	1994 4	1995 5	1996 6	1997 7	1998 8	AREA CODE	FRAME SERIAL NUMBER FROM	FRAME SERIAL NUMBER TO	QTY REQ	PART NUMBER
14	VALVE, EX.	9	0	4	5	6	7	8		.....	.....	2	14721-MR5-670
15	SPRING, IN. VALVE (OUTER)	9	0	4	5	6	7	8		.....	.....	4	14751-ME9-000
16	SPRING, EX. VALVE (OUTER)	9	0	4	5	6	7	8		.....	.....	2	14752-ME9-000
17	SPRING, VALVE (INNER)	9	0	4	5	6	7	8		.....	.....	6	14762-MR5-671
18	RETAINER, VALVE SPRING	9	0	4	5	6	7	8		.....	.....	6	14771-410-010
19	SEAT, VALVE SPRING	9	0	4	5	6	7	8		.....	.....	6	14775-ME9-000
20	COTTER, VALVE	9	0	4	5	6	7	8		.....	.....	12	14781-MB9-000
21	PIN, ROCKER SHAFT SETTING	9	0	4	5	6	..	..		.....	.....	2	90701-MJ6-000

 © AMERICAN HONDA MOTOR CO. INC. 1997

CAM CHAIN

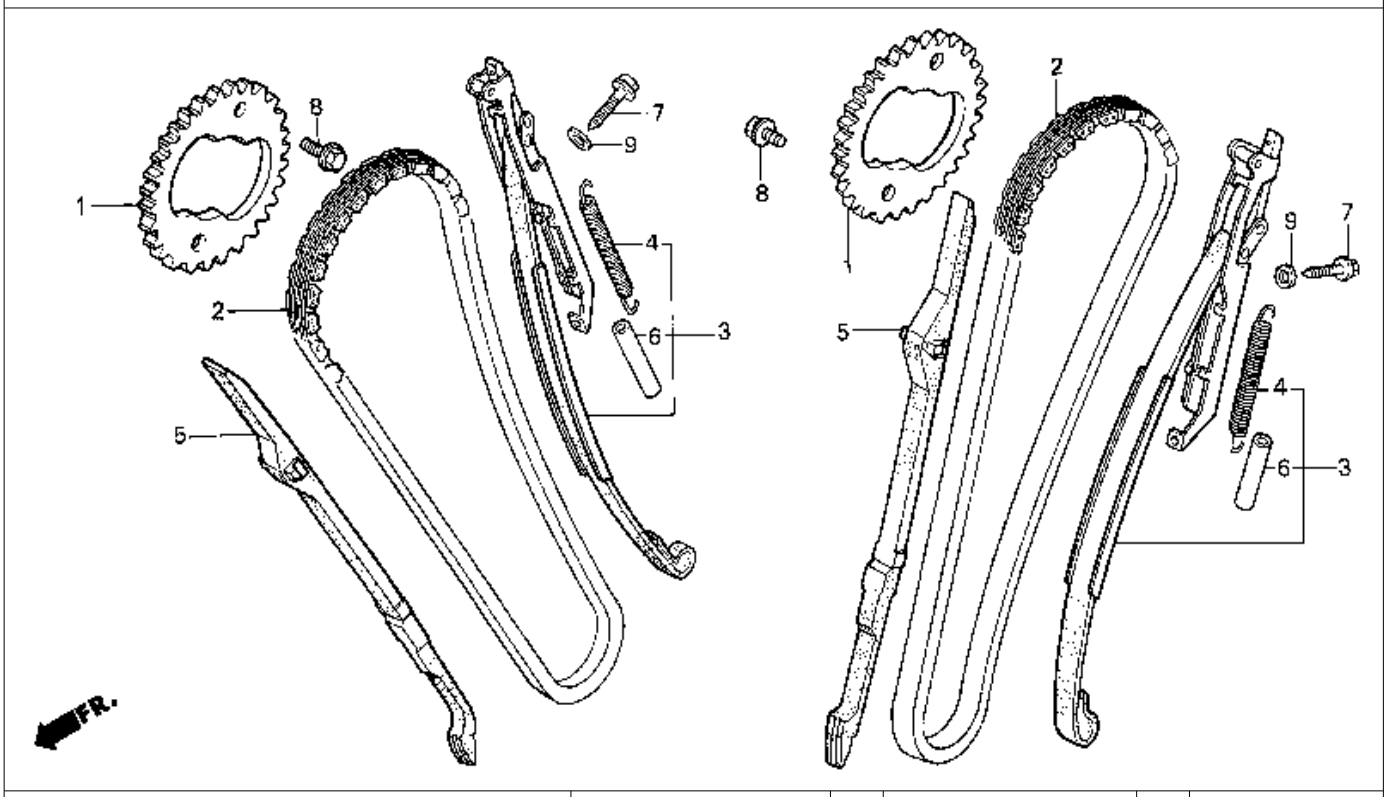

9 = PC800'89
0 = PC800'90
4 = PC800'94
5 = PC800'95
6 = PC800'96
7 = PC800'97
8 = PC800'98

Ref. No.	BLOCK NO. E-4 / DESCRIPTION	PC800 1989	1990	1994	1995	1996	1997	1998	AREA CODE	FRAME SERIAL NUMBER FROM	TO	QTY REQ	PART NUMBER
1	SPROCKET, CAM (42T)	9	0	4	5	6	7	8		.....	.....	2	14322-ME9-000
2	CHAIN, CAM	9	0	4	5	6	7	8		.....	.....	2	14401-MR5-671
3	TENSIONER COMP., CAMCHAIN	9	0	4	5	6	7	8		.....	.....	2	14510-MK7-770
4	SPRING, CAM CHAIN TENSIONER	9	0	4	5	6	7	8		.....	.....	2	14516-MG8-003
5	GUIDE, CAM CHAIN	9	0	4	5	6	7	8		.....	.....	2	14522-MK7-770
6	TUBE, TENSIONER SPRING	9	0	4	5	6	7	8		.....	.....	2	14545-MK7-670
7	BOLT, FLANGE (6X24)	9	0	4	5	6	7	8		.....	.....	4	90016-MG8-000
8	BOLT, UBS (7X15)	9	0	4	5	6	7	8		.....	.....	4	90026-MM8-000
9	WASHER, SEALING (6MM)	9	0	4	5	6	7	8		.....	.....	4	90441-706-000

 © AMERICAN HONDA MOTOR CO. INC. 1997

CYLINDER

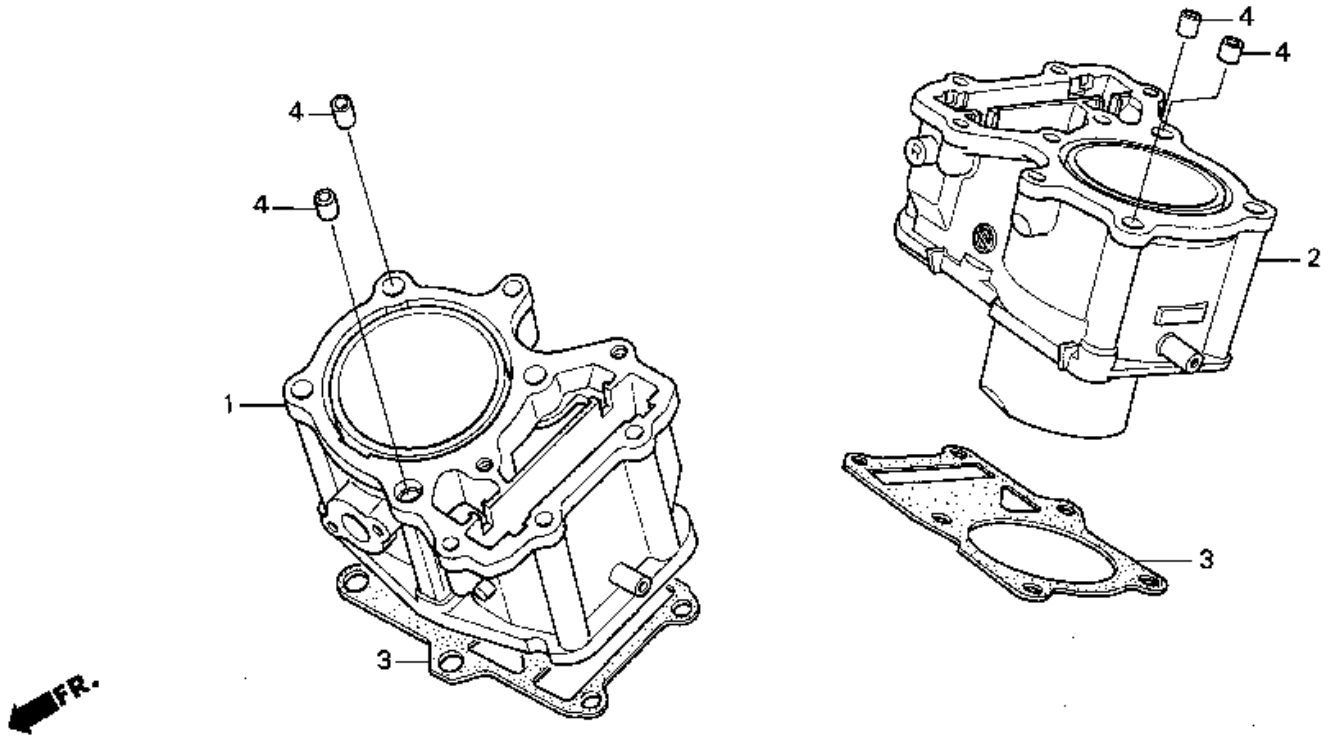

9 = PC800'89 6 = PC800'96
0 = PC800'90 7 = PC800'97
4 = PC800'94 8 = PC800'98
5 = PC800'95

Ref. No.	BLOCK NO. E-5 / DESCRIPTION	PC800 1989	1990	1994	1995	1996	1997	1998	AREA CODE	FRAME SERIAL NUMBER FROM	TO	QTY REQ	PART NUMBER
1	CYLINDER COMP., FR.	9	0	4	5	6	7	8		.....	.....	1	12100-MR5-670
2	CYLINDER COMP., RR.	9	0	4	5	6	7	8		.....	.....	1	12110-MR5-670
3	GASKET CYLINDER	9	0	4	5	6	7	8		.....	.....	2	12191-MK7-671
4	PIN A, DOWEL (14X20)	9	0	4	5	6	7	8		.....	.....	4	94301-14200

 © AMERICAN HONDA MOTOR CO. INC. 1997

RIGHT CRANKCASE COVER

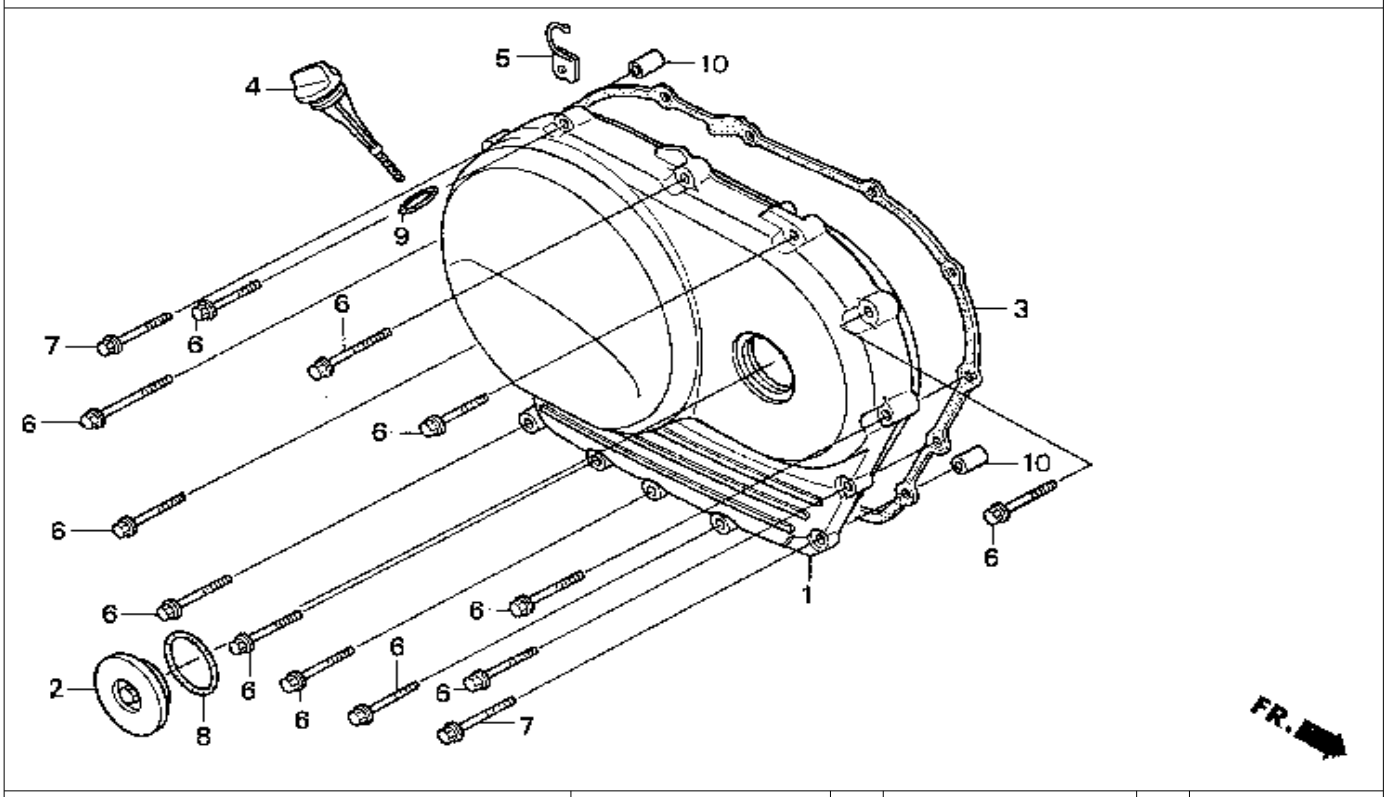

9 = PC800'89 6 = PC800'96
0 = PC800'90 7 = PC800'97
4 = PC800'94 8 = PC800'98
5 = PC800'95

Ref. No.	BLOCK NO. E-6 / DESCRIPTION	PC800 1989	1990	1994	1995	1996	1997	1998	AREA CODE	FRAME SERIAL NUMBER FROM	TO	QTY REQ	PART NUMBER
1	COVER, R. CRANKCASE	9	0	4	5	6	7	8		.....	.....	1	11330-MR5-670
2	CAP (45MM)	9	0	4	5	6	7	8		.....	.....	1	11332-MM5-000
3	GASKET, R. CRANKCASE COVER	9	0	..	..	..	..	..		.....	.....	1	11394-MK7-306
	GASKET, R. CRANKCASE COVER	9	0	..	..	..	..	..		.....	.....	1	11394-MK7-670
	GASKET, R. CRANKCASE COVER	9	0	4	5	6	7	8		.....	.....	1	11394-MR5-801
4	DIPSTICK, OIL	9	0	4	5	6	7	8		.....	.....	1	15650-MK7-670
5	CLAMP, STARTER CABLE	9	0	..	..	..	..	..		.....	.....	1	31250-MR5-000
	CLAMP, STARTER CABLE	..	..	4	5	6	7	8		.....	.....	1	31250-MR5-870
6	BOLT, FLANGE (6X35)	9	0	4	5	6	..	..		.....	.....	12	90001-GHB-700
	BOLT, FLANGE (6X35) (NSHF)	..	..	..	..	..	7	8		.....	.....	12	90004-GHB-700
7	BOLT, FLANGE (6X50)	9	0	4	5	6	..	..		.....	.....	2	90001-GHB-730
	BOLT, FLANGE (6X50) (NSHF)	..	..	..	..	..	7	8		.....	.....	2	90004-GHB-730
8	O-RING (43.1X3.6) (ARAI)	9	0	4	5	6	7	8		.....	.....	1	91301-ML7-003
9	O-RING (22X3)	9	0	4	5	6	7	8		.....	.....	1	91301-250-000
	O-RING (22X3)	9	0	4	5	6	7	8		.....	.....	1	91307-425-003
10	PIN A, DOWEL (8X14)	9	0	4	5	6	7	8		.....	.....	2	94301-08140

 © AMERICAN HONDA MOTOR CO. INC. 1997

CLUTCH

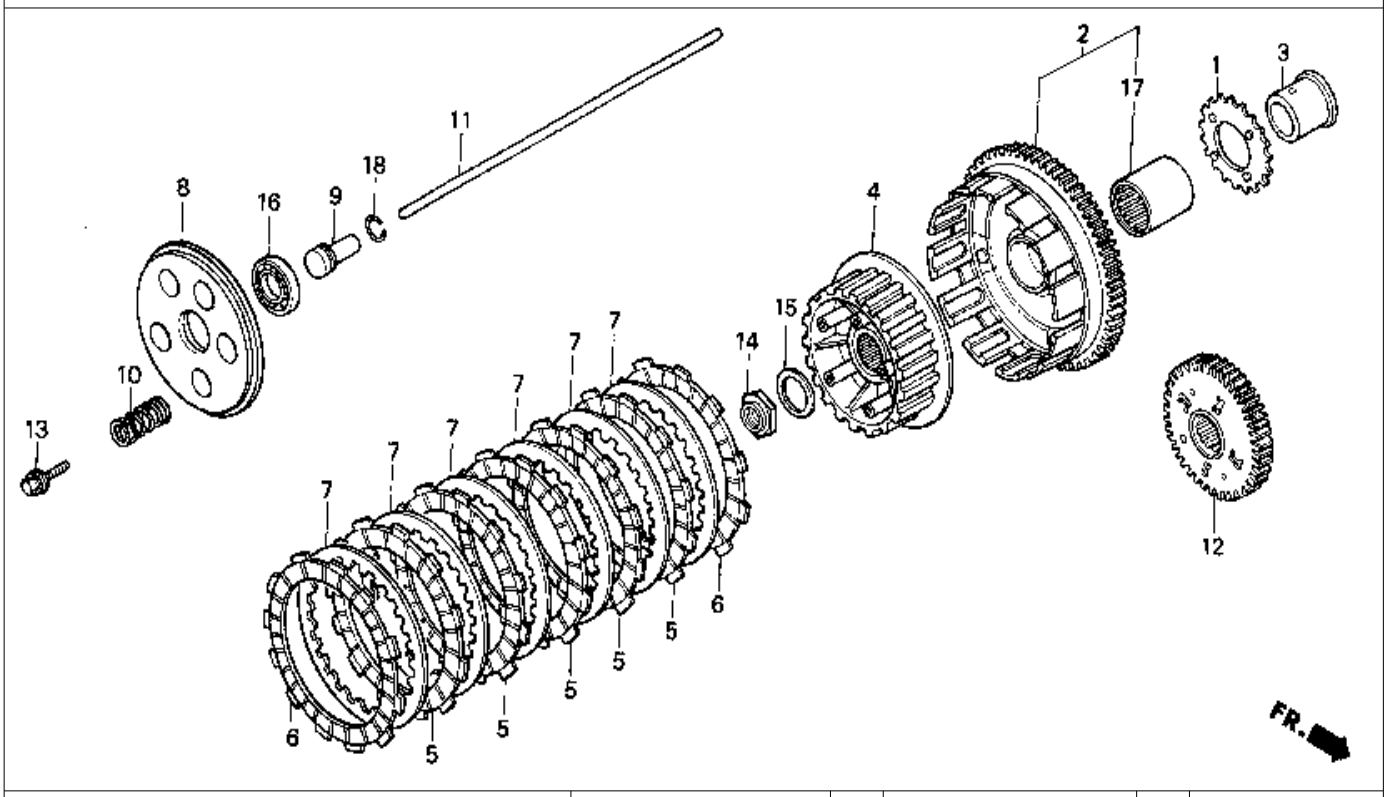

9 = PC800'89
0 = PC800'90
4 = PC800'94
5 = PC800'95
6 = PC800'96
7 = PC800'97
8 = PC800'98

Ref. No.	BLOCK NO. E-7 / DESCRIPTION	PC800 1989	1990	1994	1995	1996	1997	1998	AREA CODE	FRAME SERIAL NUMBER FROM	TO	QTY REQ	PART NUMBER
1	SPROCKET, OIL PUMP DRIVE	9	0	4	5	6	7	8		.....	.....	1	15131-MR5-670
2	OUTER COMP., CLUTCH	9	..	..	..	..	..	..		.....	.....	1	22100-MR5-670
	OUTER COMP., CLUTCH	9	0	4	5	6	7	8		.....	.....	1	22100-MR5-870
3	GUIDE, CLUTCH (OUTER)	9	0	4	5	6	7	8		.....	.....	1	22116-ME9-000
4	CENTER, CLUTCH	9	0	4	5	6	7	8		.....	.....	1	22120-MR5-670
5	DISK, CLUTCH FRICTION	9	0	..	..	..	..	..		.....	.....	5	22201-MJ1-761
	DISK, CLUTCH FRICTION	..	..	4	5	6	7	8		.....	.....	5	22201-MY3-000
6	DISK, CLUTCH FRICTION	9	0	4	5	6	7	8		.....	.....	2	22201-MM5-000
7	PLATE, CLUTCH	9	0	4	5	6	7	8		.....	.....	6	22321-MR5-670
8	PLATE, CLUTCH PRESSURE	9	0	4	5	6	7	8		.....	.....	1	22350-MK3-770
9	PIECE, CLUTCH JOINT	9	0	4	5	6	7	8		.....	.....	1	22366-MR5-670
10	SPRING, CLUTCH	9	..	..	..	..	..	..		.....	.....	5	22401-MR5-671
	SPRING, CLUTCH	9	0	4	5	6	7	8		.....	.....	5	22401-MR5-672
11	ROD, CLUTCH LIFTER	9	0	4	5	6	7	8		.....	.....	1	22850-MR5-670
12	GEAR ASSY., PRIMARY DRIVE	9	..	..	..	..	..	..		.....	.....	1	23110-MR5-670
	GEAR ASSY., PRIMARY DRIVE	..	0	4	5	6	7	8		.....	.....	1	23110-MR5-870

 © AMERICAN HONDA MOTOR CO. INC. 1997

CLUTCH

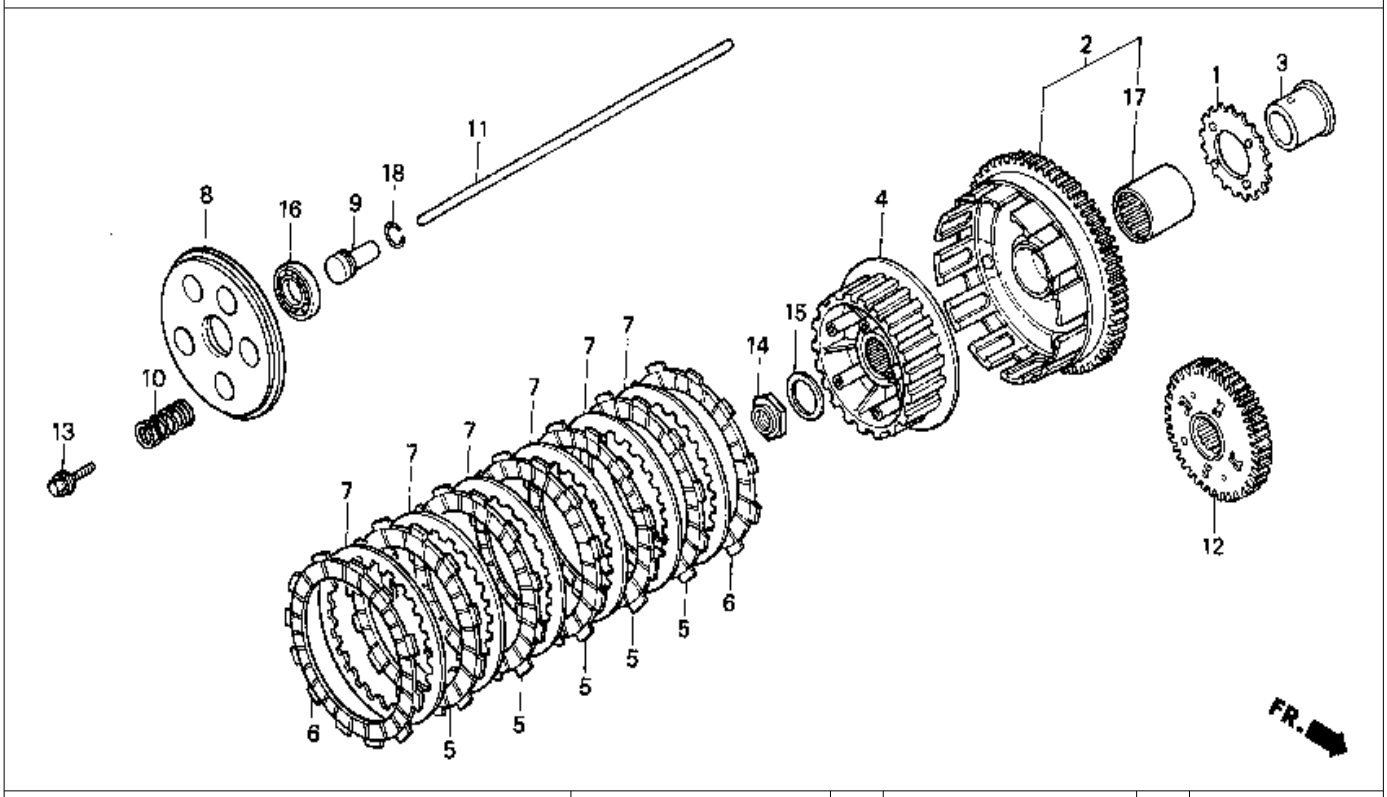

9 = PC800'89
0 = PC800'90
4 = PC800'94
5 = PC800'95
6 = PC800'96
7 = PC800'97
8 = PC800'98

Ref. No.	BLOCK NO. E-7 / DESCRIPTION	PC800 1989	1990	1994	1995	1996	1997	1998	AREA CODE	FRAME SERIAL NUMBER FROM	TO	QTY REQ	PART NUMBER
13	BOLT-WASHER (6X20)	9	0	4	5	6	7	8		.....	.....	5	90021-MR5-670
14	NUT, LOCK (22MM)	9	0	4	5	6	7	8		.....	.....	1	90231-MM5-000
15	WASHER, SPRING (22MM)	9	0	4	5	6	7	8		.....	.....	1	90432-MB0-010
16	BEARING, RADIAL BALL (16003)	9	0	4	5	6	7	8		.....	.....	1	91008-KK6-000
	BEARING, RADIAL BALL (16003)	9	0	4	5	6	7	8		.....	.....	1	91008-362-000
	BEARING, RADIAL BALL (16003)	9	0	4	5	6	7	8		.....	.....	1	91010-HC0-003
17	BEARING, NEEDLE (35X42X30) (TOYO)	9	0	4	5	6	7	8		.....	.....	1	91024-MB0-003
	BEARING, NEEDLE (35X42X30) (NIPPON)	9	0	4	5	6	7	8		.....	.....	1	91024-MB0-004
18	CLIP, PISTON PIN (15MM)	9	0	4	5	6	7	8		.....	.....	1	94601-15000

 © AMERICAN HONDA MOTOR CO. INC. 1997

STARTER DRIVEN GEAR

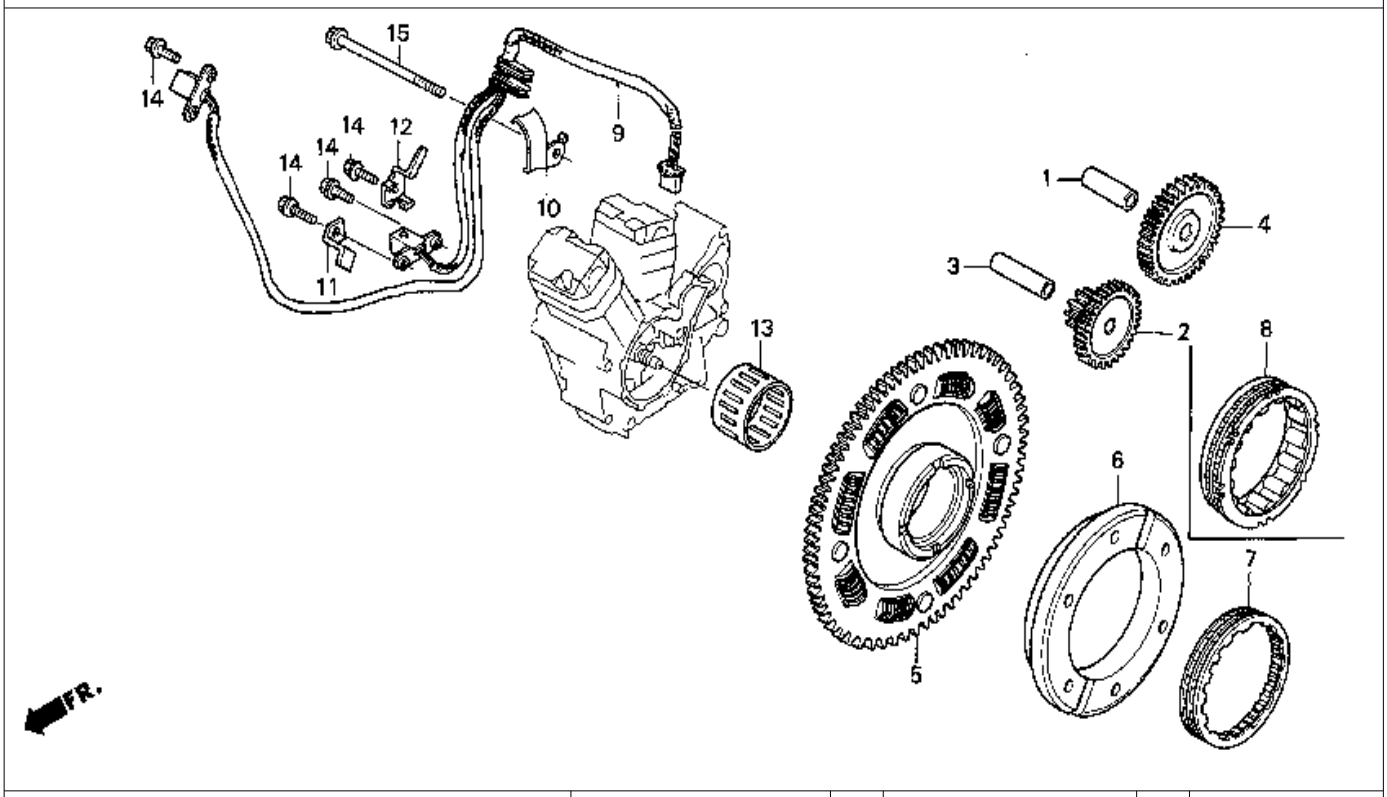

9 = PC800'89 6 = PC800'96
0 = PC800'90 7 = PC800'97
4 = PC800'94 8 = PC800'98
5 = PC800'95

Ref. No.	BLOCK NO. E-8 / DESCRIPTION	1989	1990	1994	1995	1996	1997	1998	AREA CODE	FRAME SERIAL NUMBER FROM	FRAME SERIAL NUMBER TO	QTY REQ	PART NUMBER
1	PIN, PISTON (10X13)	9	0	4	5	6	7	8		.....	.....	1	13111-GK8-000
	PIN, PISTON	9	0	4	5	6	7	8		.....	.....	1	13111-GS7-000
	PIN, PISTON (10X13)	9	0	4	5	6	7	8		.....	.....	1	13111-122-000
2	GEAR, STARTER REDUCTION	9	0	4	5	6	7	8		.....	.....	1	28101-ME9-770
3	PIN (10X44)	9	0	4	5	6	7	8		.....	.....	1	28102-ME9-000
4	GEAR, STARTER	9	0	4	5	6	7	8		.....	.....	1	28106-ME9-770
5	GEAR COMP., STARTER DRIVEN	9	0	4	5	6	7	8		.....	.....	1	28110-MR5-670
6	OUTER, STARTER CLUTCH	9	0	4	5	6	7	8		.....	.....	1	28121-MK7-671
7	CLUTCH, ONE-WAY	9	0	..	..	..	..	..		.....	.....	1	28125-MK5-023
	CLUTCH, ONE-WAY	9	0	..	..	..	..	..		.....	.....	1	28126-MK5-004
8	CLUTCH, ONE-WAY	..	..	4	5	6	7	8		.....	.....	1	28126-MK5-004
9	ALTERNATOR ASSY., PULSE	9	..	..	..	..	..	..		.....	.....	1	30300-MR5-003
	ALTERNATOR ASSY., PULSE (TEC)	9	0	4	5	6	7	8		.....	.....	1	30300-MR5-871
	ALTERNATOR ASSY., PULSE	..	0	..	..	..	..	..		.....	2103335	1	30300-MR5-870
10	CLAMP A, PULSE	9	0	4	5	6	7	8		.....	.....	1	32962-MR5-000
11	CLAMP B, PULSE	9	0	4	5	6	7	8		.....	.....	1	32963-MM8-000

 © AMERICAN HONDA MOTOR CO. INC. 1997

STARTING DRIVEN GEAR

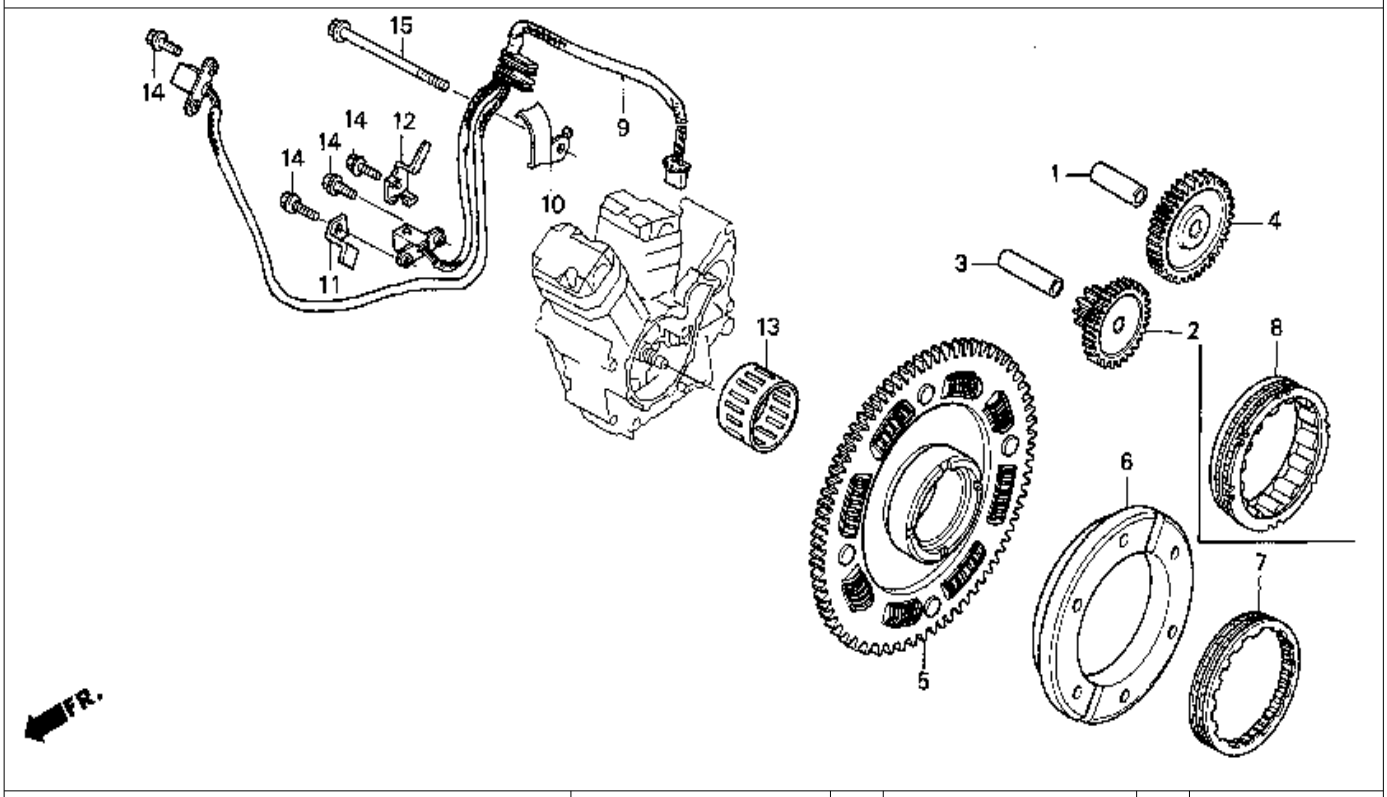

9 = PC800'89
0 = PC800'90
4 = PC800'94
5 = PC800'95
6 = PC800'96
7 = PC800'97
8 = PC800'98

Ref. No.	BLOCK NO. E-8 / DESCRIPTION	1989 / 90	1990	1994	1995	1996	1997	1998	AREA CODE	FRAME SERIAL NUMBER FROM	TO	QTY REQ	PART NUMBER
12	CLAMP C, PULSE	9	0	4	5	6	7	8		.....	.....	1	32964-MR6-000
13	BEARING, NEEDLE (32MM) (TOMUSON)	9	0	4	5	6	7	8		.....	.....	1	91021-415-005
14	BOLT, FLANGE (6X20)	9	0	4	5	6	7	8		.....	.....	5	95701-06020-08
15	BOLT, FLANGE (8X80)	9	0	4	5	6	7	8		.....	.....	1	95701-08080-00

 © AMERICAN HONDA MOTOR CO. INC. 1997

ALTERNATOR

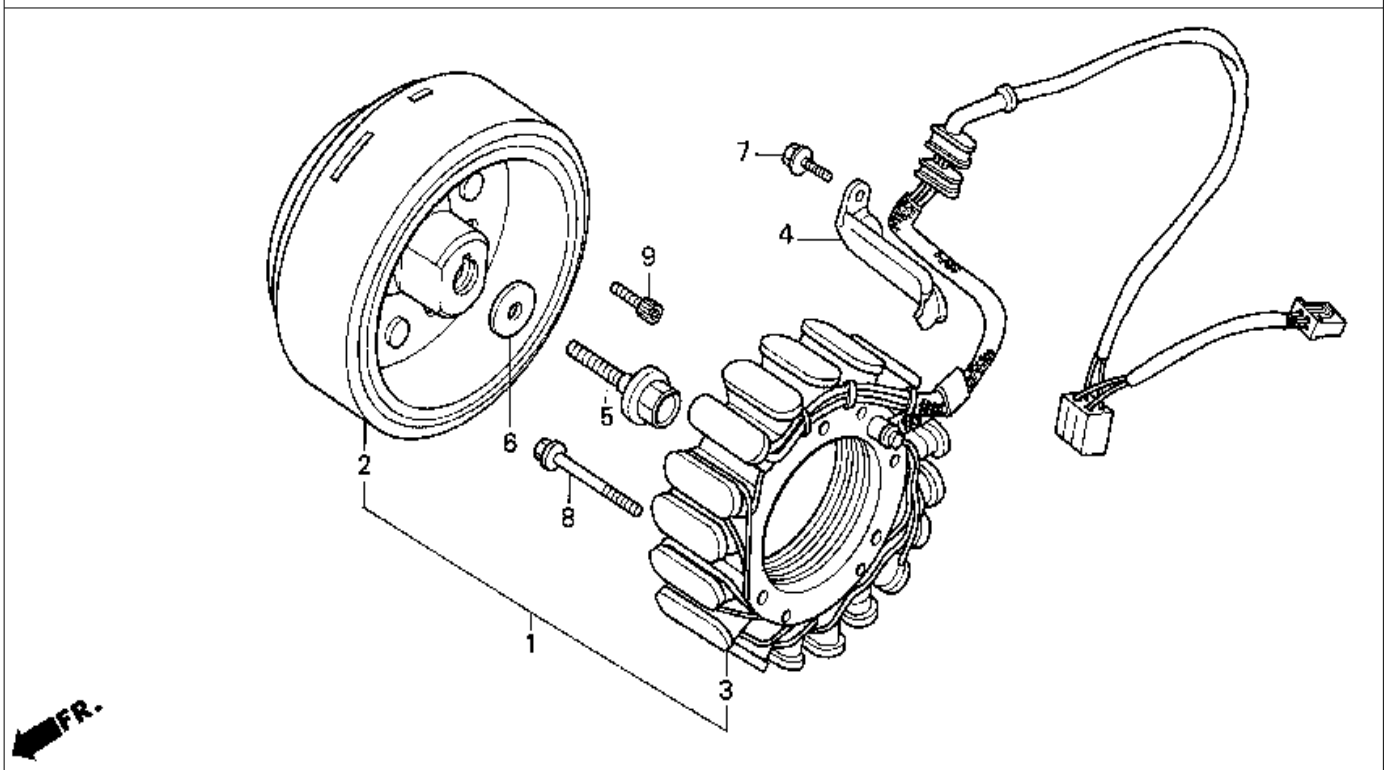

9 = PC800'89 6 = PC800'96
0 = PC800'90 7 = PC800'97
4 = PC800'94 8 = PC800'98
5 = PC800'95

Ref. No.	BLOCK NO. E-9 / DESCRIPTION	PC800 1989	1990	1994	1995	1996	1997	1998	AREA CODE	FRAME SERIAL NUMBER FROM	TO	QTY REQ	PART NUMBER
1	ALTERNATOR ASSY., FLYWHEEL TYPE E (HITACHI)	9	..	..	..	..	..	..		.....	.....	1	31100-MR5-005
	ALTERNATOR ASSY., FLYWHEEL TYPE	9	..	..	..	..	..	..		.....	.....	1	31100-MR5-015
	ALTERNATOR ASSY., FLYWHEEL TYPE	..	0	..	..	..	..	..		.....	2103335	1	31100-MR5-870
	ALTERNATOR ASSY., FLYWHEEL TYPE (HITACHI)	..	0	..	..	..	..	..		2103336	.....	1	31100-MR5-871
2	FLYWHEEL COMP. (HITACHI)	9	0	4	5	6	7	8		.....	.....	1	31110-MR5-005
3	STATOR COMP. (HITACHI)	9	..	..	..	..	..	..		.....	.....	1	31120-MR5-005
	STATOR COMP. (HITACHI)	9	..	..	..	..	..	..		.....	.....	1	31120-MR5-015
	STATOR COMP.	..	0	..	..	..	..	..		.....	2103335	1	31120-MR5-870
	STATOR COMP. (HITACHI)	..	0	4	5	6	7	8		.....	.....	1	31120-MR5-871
4	CLAMP, ALTERNATOR WIRE	9	0	4	5	6	7	8		.....	.....	1	32961-MR5-000
5	BOLT, FLANGE (12X45)	9	0	4	5	6	7	8		.....	.....	1	90026-MK7-670
6	WASHER (12.5X34X5.0	9	0	4	5	6	7	8		.....	.....	1	90402-PC6-000
7	BOLT, FLANGE (6X12)	9	0	4	5	6	7	8		.....	.....	1	95701-06012-00
8	BOLT, FLANGE (6X40)	9	0	4	5	6	7	8		.....	.....	3	95701-06040-00

 © AMERICAN HONDA MOTOR CO. INC. 1997

ALTERNATOR

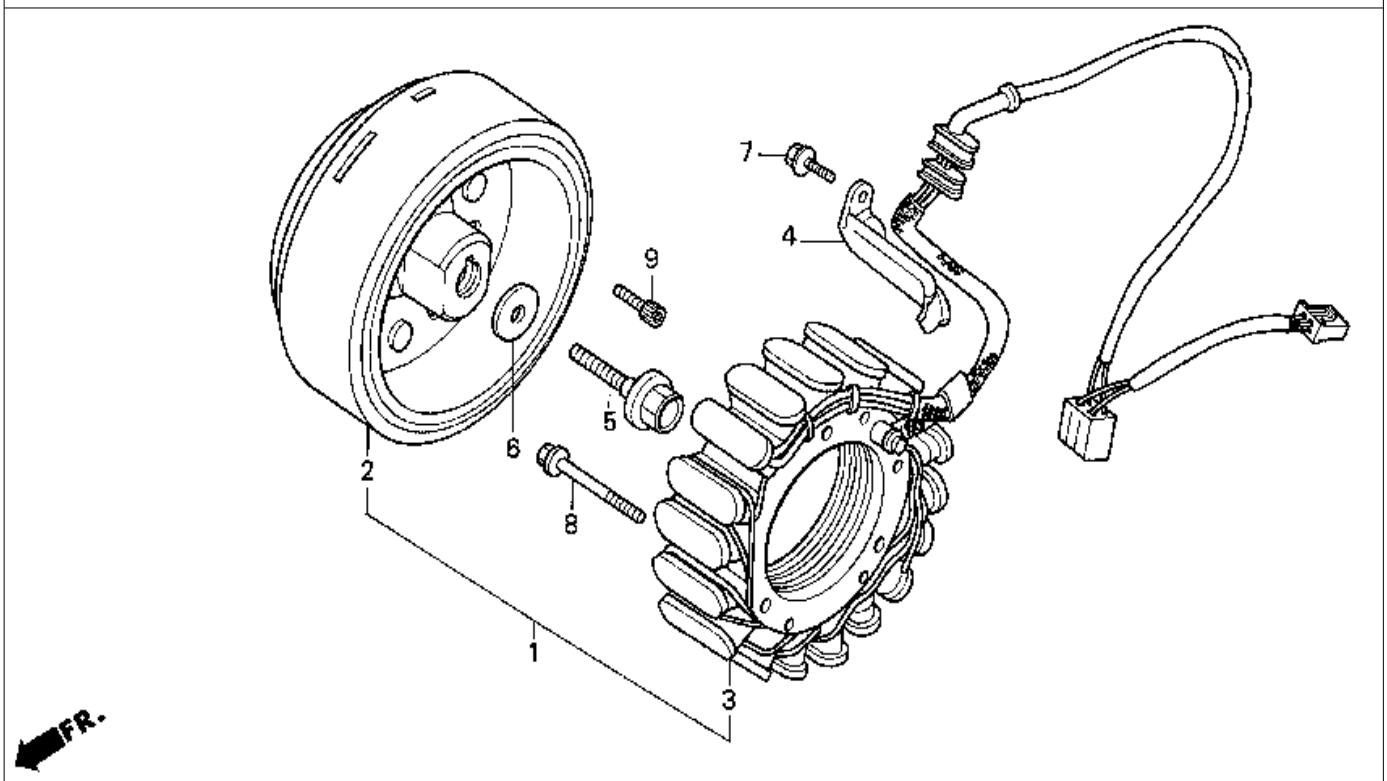

9 = PC800'89 6 = PC800'96
0 = PC800'90 7 = PC800'97
4 = PC800'94 8 = PC800'98
5 = PC800'95

Ref. No.	BLOCK NO. E-9 / DESCRIPTION	PC800 1989	1990	1994	1995	1996	1997	1998	AREA CODE	FRAME SERIAL NUMBER FROM	TO	QTY REQ	PART NUMBER
9	BOLT,SOCKET (8X22)	9	0	4	5	6	7	8		.....	.....	6	96700-08022-18

 © AMERICAN HONDA MOTOR CO. INC. 1997

LEFT CRANKCASE COVER

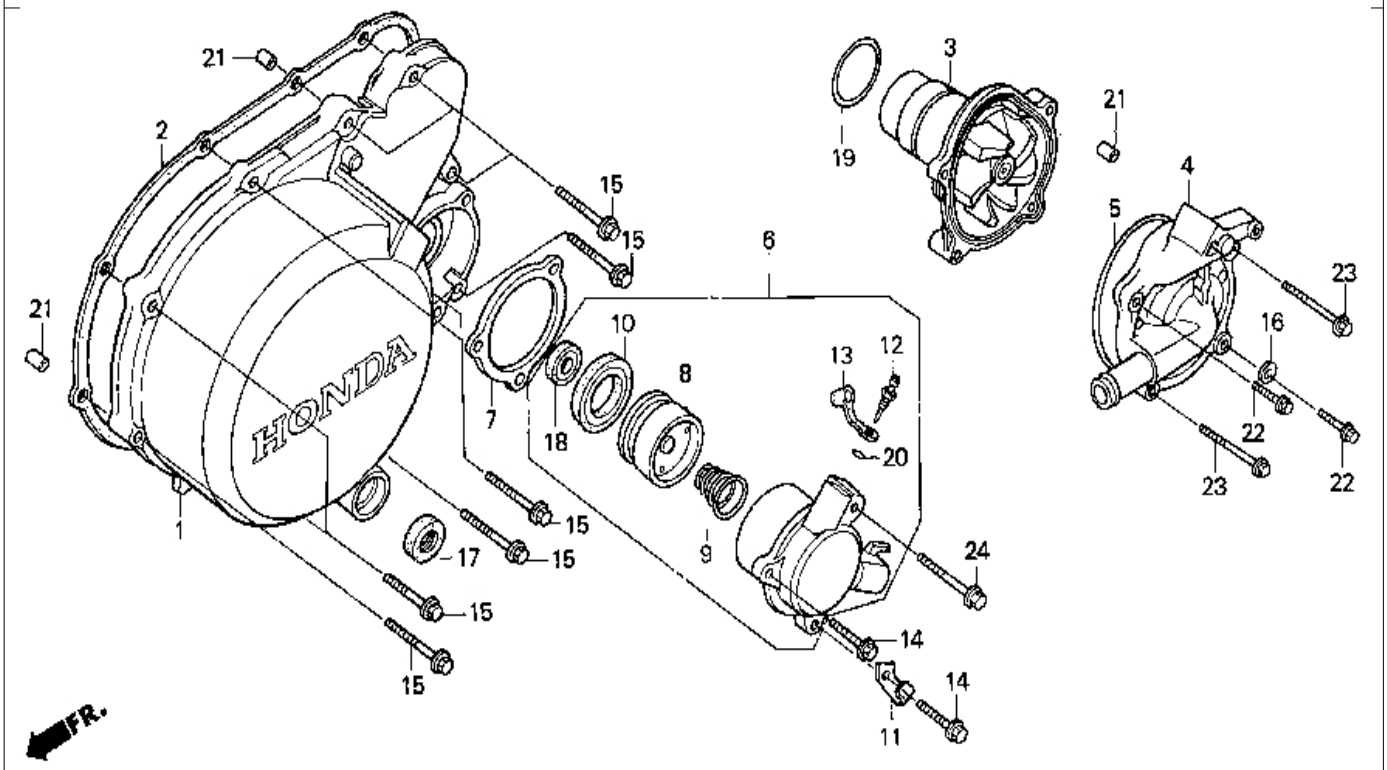

9 = PC800'89 6 = PC800'96
0 = PC800'90 7 = PC800'97
4 = PC800'94 8 = PC800'98
5 = PC800'95

Ref. No.	BLOCK NO. E-10 DESCRIPTION	PC800 1989	1990	1994	1995	1996	1997	1998	AREA CODE	FRAME SERIAL NUMBER FROM	TO	QTY REQ	PART NUMBER
1	COVER, L. CRANKCASE	9	0	4	5	6	7	8		.....	.....	1	11361-MR5-670
2	GASKET, L. CRANCASE COVER	9	0	..	..	..	..	..		.....	.....	1	11395-MR5-306
	GASKET, L. CRANCASE COVER	9	0	..	..	..	..	..		.....	.....	1	11395-MR5-670
	GASKET, L. CRANCASE COVER	9	0	4	5	6	7	8		.....	.....	1	11395-MR5-800
3	WATER PUMP COMP.	9	..	..	..	..	..	..		.....	.....	1	19200-MR5-670
	WATER PUMP COMP.	9	0	4	5	6	7	8		.....	.....	1	19200-ME9-040
	WATER PUMP COMP.	..	0	..	..	..	..	..		.....	.....	1	19200-ME9-020
	WATER PUMP COMP.	..	0	4	5	..	..	..		.....	.....	1	19200-ME9-030
4	COVER, WATER PUMP	9	..	..	..	..	..	..		.....	.....	1	19221-MR5-670
	COVER, WATER PUMP	..	0	..	..	..	..	..		.....	.....	1	19221-MK7-772
	COVER, WATER PUMP	..	..	4	5	6	7	9		.....	.....	1	19221-MAA-000
5	GASKET, WATER PUMP COVER	9	0	4	5	6	7	8		.....	.....	1	19226-ME9-000
6	CYLINDER ASSY., SLAVE	9	0	4	5	6	7	8		.....	.....	1	22860-MR6-670
7	INSULATOR, CLUTCH SLAVE CYLINDER	9	0	4	5	6	7	8		.....	.....	1	22862-MB0-000
8	PISTON, SLAVE CYLINDER	9	0	4	5	6	7	8		.....	.....	1	22863-MB0-003
9	PISTON, SLAVE CYLINDER	9	0	4	5	6	7	8		.....	.....	1	22864-MB0-003

 © AMERICAN HONDA MOTOR CO. INC. 1997

LEFT CRANKCASE COVER

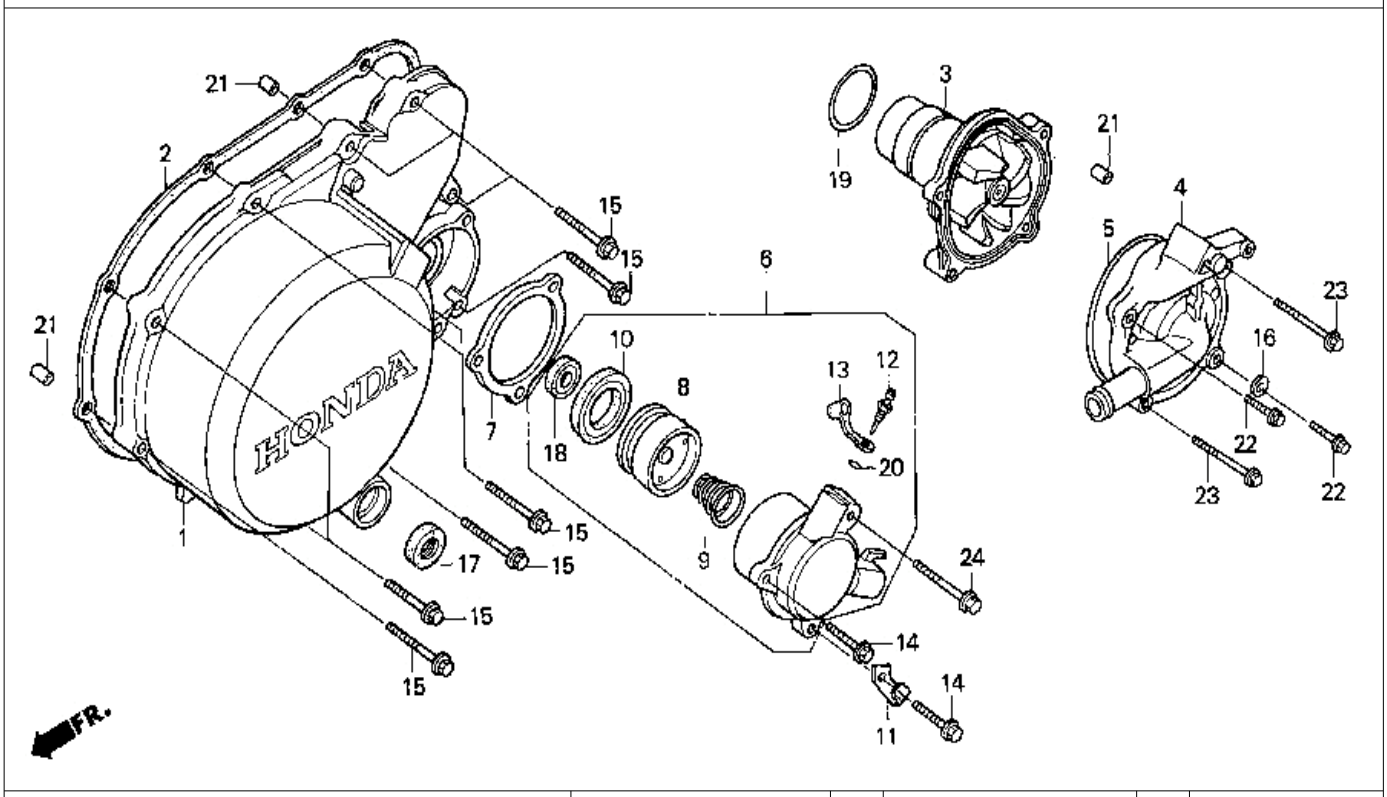

9 = PC800'89 6 = PC800'96
0 = PC800'90 7 = PC800'97
4 = PC800'94 8 = PC800'98
5 = PC800'95

Ref. No.	BLOCK NO. E-10 / DESCRIPTION	1989 / 9	1990 / 0	1994 / 4	1995 / 5	1996 / 6	1997 / 7	1998 / 8	AREA CODE	FRAME SERIAL NUMBER FROM	FRAME SERIAL NUMBER TO	QTY REQ	PART NUMBER
10	CUP, PISTON	9	0	4	5	6	7	8		.....	.....	1	22865-MB0-003
11	CLAMP, CABEL	9	0	4	..	..	..	..		.....	.....	1	32111-MR5-000
12	SCREW, BLEEDER	9	0	4	5	6	7	8		.....	.....	1	43352-MG9-006
13	CAP, BLEEDER SCREW	9	0	4	5	6	7	8		.....	.....	1	43353-MG9-006
	CAP, BLEEDER SCREW	9	0	4	5	6	7	8		.....	.....	1	43353-443-761
	CAP, BLEEDER SCREW	9	0	4	5	6	7	8		.....	.....	1	43353-461-771
14	BOLT, FLANGE (6X25)	9	0	4	5	6	..	..		.....	.....	2	90001-GHB-670
	BOLT, FLANGE (6X25)	..	..	..	..	..	7	8		.....	.....	2	95801-06025-00
15	BOLT, FLANGE (6X35)	9	0	4	5	6	..	..		.....	.....	10	90001-GHB-700
	BOLT, FLANGE (6X35) (NSHF	..	..	..	..	..	7	8		.....	.....	10	90004-GHB-700
16	WASHER, SEALING (6MM)	9	0	4	..	..	..	..		.....	.....	1	90441-706-000
	WASHER, SEALING (6.5MM)	..	..	..	5	6	7	8		.....	.....	1	90463-ML7-000
17	OIL SEAL (12.5X25X8) (ARAI)	9	0	4	5	6	7	8		.....	.....	1	91204-425-003
18	OIL SEAL (8X18X5) (NISSIN)	9	0	4	5	6	7	8		.....	.....	1	91209-MB0-003
19	O-RING (32.95X2.62) (ARAI)	9	0	4	5	6	7	8		.....	.....	1	91302-MB0-013
20	O-RING (NISSIN)	9	0	4	5	6	7	8		.....	.....	1	91355-MG9-006

 © AMERICAN HONDA MOTOR CO. INC. 1997

LEFT CRANKCASE COVER

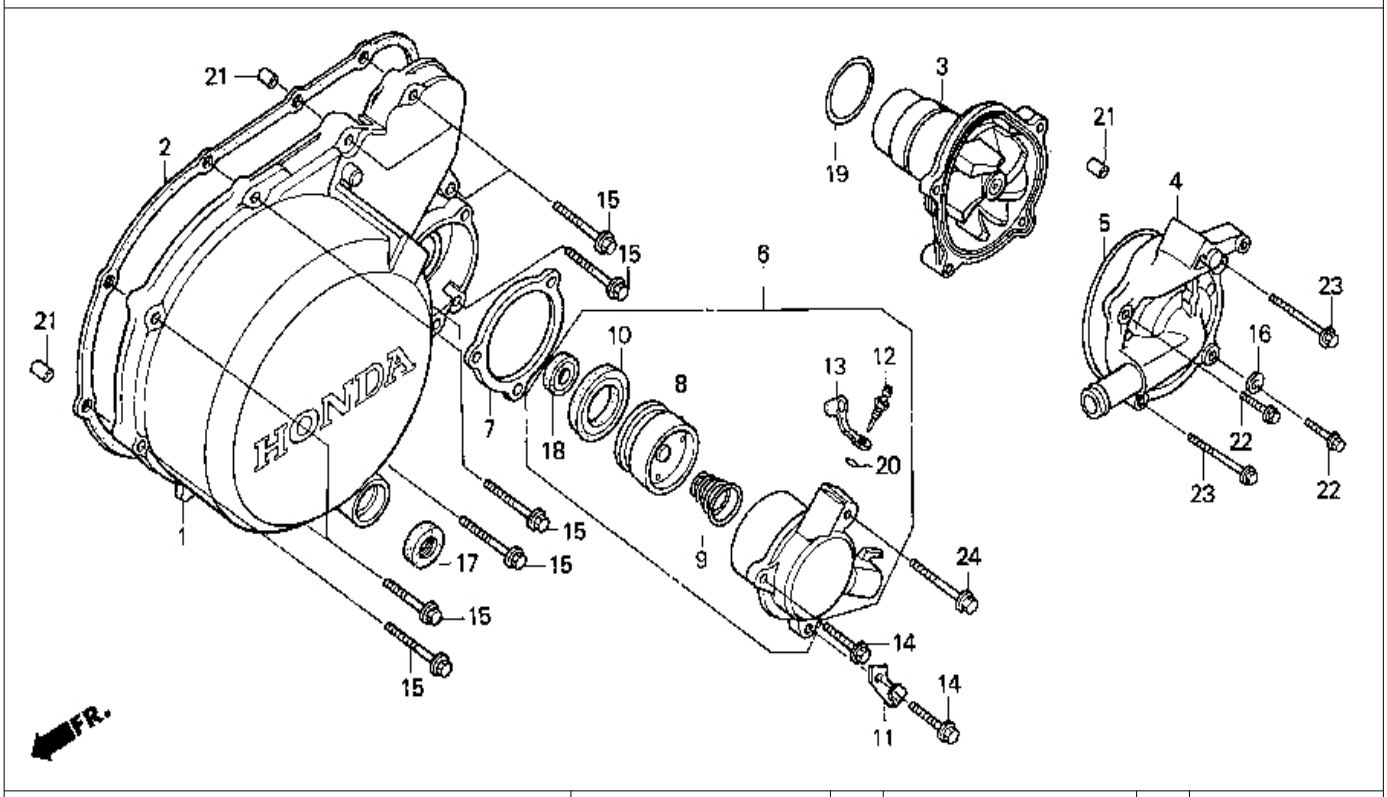

9 = PC800'89	6 = PC800'96								A			
0 = PC800'90	7 = PC800'97			PC800					R			
4 = PC800'94	8 = PC800'98								E		Q	
5 = PC800'95									A		T	
			1	1	1	1	1	1	1		Y	
			9	9	9	9	9	9	9			
			8	9	9	9	9	9	C			
									O	FRAME	R	
Ref.	BLOCK NO.	E-10	9	0	4	5	6	7	8	D SERIAL NUMBER	E	
No.	DESCRIPTION		9	0	4	5	6	7	8	E FROM TO	Q	PART NUMBER
21	PIN A, DOWEL (8X14)		9	0	4	5	6	7	8		3	94301-08140
22	BOLT, FLANGE (6X25)		9	0	4	5	6	7	8		2	95701-06025-00
23	BOLT, FLANGE (6X45)		9	0	4	5	6	7	8		2	95701-06045-00
	BOLT, FLANGE (6X45)		9	0	4	5	6	7	8		2	95701-06045-07
24	BOLT, FLANGE (6X35)		9	0	4	5	6	..	..		1	90001-GHB-700
	BOLT, FLANGE (6X35)		..	..	..	..	..	7	8		1	95801-06035-00

 © AMERICAN HONDA MOTOR CO. INC. 1997

STARTER MOTOR

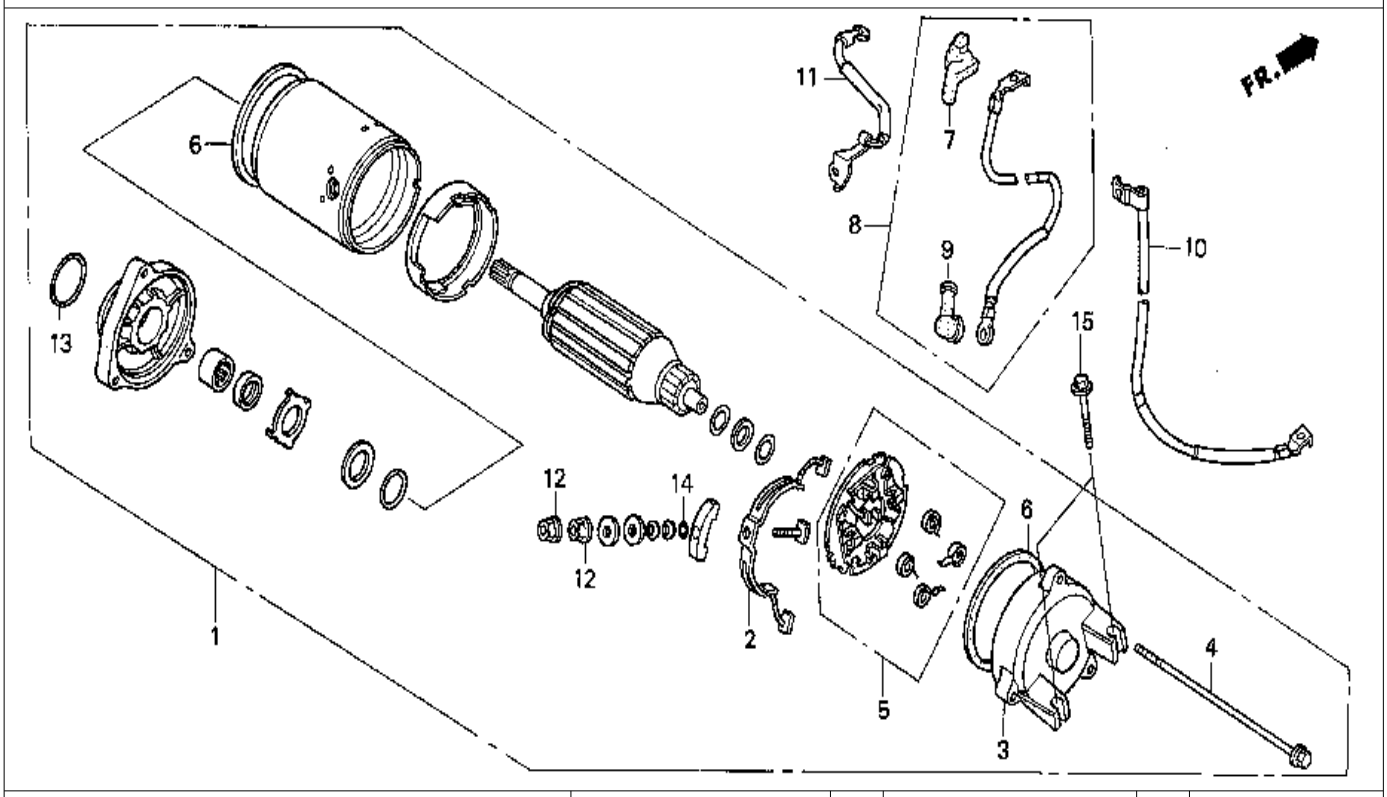

9 = PC800'89 6 = PC800'96
0 = PC800'90 7 = PC800'97
4 = PC800'94 8 = PC800'98
5 = PC800'95

Ref. No.	BLOCK NO. E-11 DESCRIPTION	PC800 1989 9	1990 0	1994 4	1995 5	1996 6	1997 7	1998 8	AREA CODE	FRAME SERIAL NUMBER FROM	TO	QTY REQ	PART NUMBER
1	MOTOR ASSY., STARTER	9	..	..	..	..	..	..		.....	2000205	1	31200-MR5-008
	MOTOR ASSY., STARTER	9	..	..	..	..	..	..		.....	.....	1	31200-MR5-018
		..	0	..	..	..	..	..		.....	2103345	1	31200-MR5-018
	MOTOR ASSY., STARTER	9	0	..	..	..	..	..		.....	.....	1	31200-MR5-028
	MOTOR ASSY., STARTER	..	..	4	5	6	7	8		.....	.....	1	31200-MR5-038
2	TERMINAL SET, BRUSH	9	0	4	5	6	7	8		.....	.....	1	31201-MR6-008
3	BRACKET, RR.	9	0	..	..	..	..	..		.....	.....	1	31203-MR5-008
4	BOLT, SETTING	9	0	4	5	6	7	8		.....	.....	3	31205-MR1-008
5	HOLDER SET, BRUSH	9	0	4	5	6	7	8		.....	.....	1	31206-MR6-008
6	RING	9	0	4	5	6	7	8		.....	.....	2	31207-KS5-901
7	COVER A, STARTER MAGNETIC TERMINAL	9	0	4	5	6	7	8		.....	.....	1	32406-MR5-000
8	CABLE, STARTER MOTOR	9	..	..	..	..	..	..		.....	.....	1	32410-MR5-000
	CABLE, STARTER MOTOR	..	0	4	5	6	7	8		.....	.....	1	32410-MR5-870
9	COVER, STARTER MOTOR TERMINAL	9	0	4	5	6	7	8		.....	.....	1	32411-230-000
	COVER, STARTER MOTOR TERMINAL	9	0	4	5	6	7	8		.....	.....	1	32411-253-000

 © AMERICAN HONDA MOTOR CO. INC. 1997

STARTER MOTOR

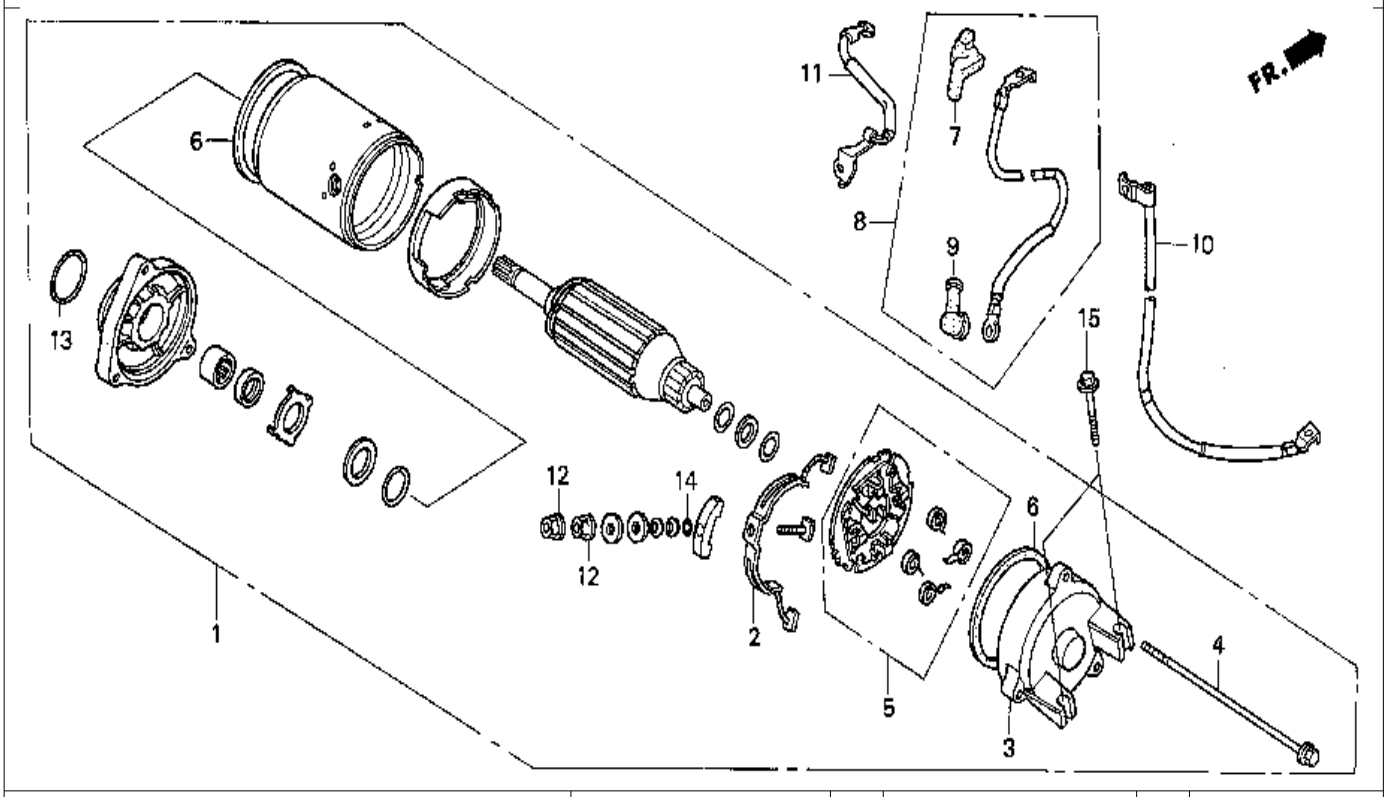

9 = PC800'89 6 = PC800'96
0 = PC800'90 7 = PC800'97
4 = PC800'94 8 = PC800'98
5 = PC800'95

Ref. No.	BLOCK NO. E-11 DESCRIPTION	PC800 1989 9	1990 0	1994 4	1995 5	1996 6	1997 7	1998 8	AREA CODE	FRAME SERIAL NUMBER FROM	TO	QTY REQ	PART NUMBER
10	CABLE, BATTERY GROUND	9	..	..	..	..	..	..		.....	.....	1	32601-MR5-000
	CABLE, BATTERY GROUND	..	0	4	5	6	7	8		.....	.....	1	32601-MR5-870
11	CABLE, ENGINE GROUND	9	0	4	5	6	7	8		.....	.....	1	32610-MR5-000
12	NUT-WASHER (6MM)	9	0	4	5	6	7	8		.....	.....	2	90071-MB0-000
13	O-RING (24.4X3.1) (ARAI)	9	0	4	5	6	7	8		.....	.....	1	91309-425-003
	O-RING (24.4X3.1)	9	0	4	5	6	7	8		.....	.....	1	91312-MG7-003
14	O-RING	9	0	4	5	6	7	8		.....	.....	1	91320-MB0-000
15	BOLT, FLANGE (6X32)	9	0	4	5	6	7	8		.....	.....	2	95701-06032-00

 © AMERICAN HONDA MOTOR CO. INC. 1997

OIL PUMP

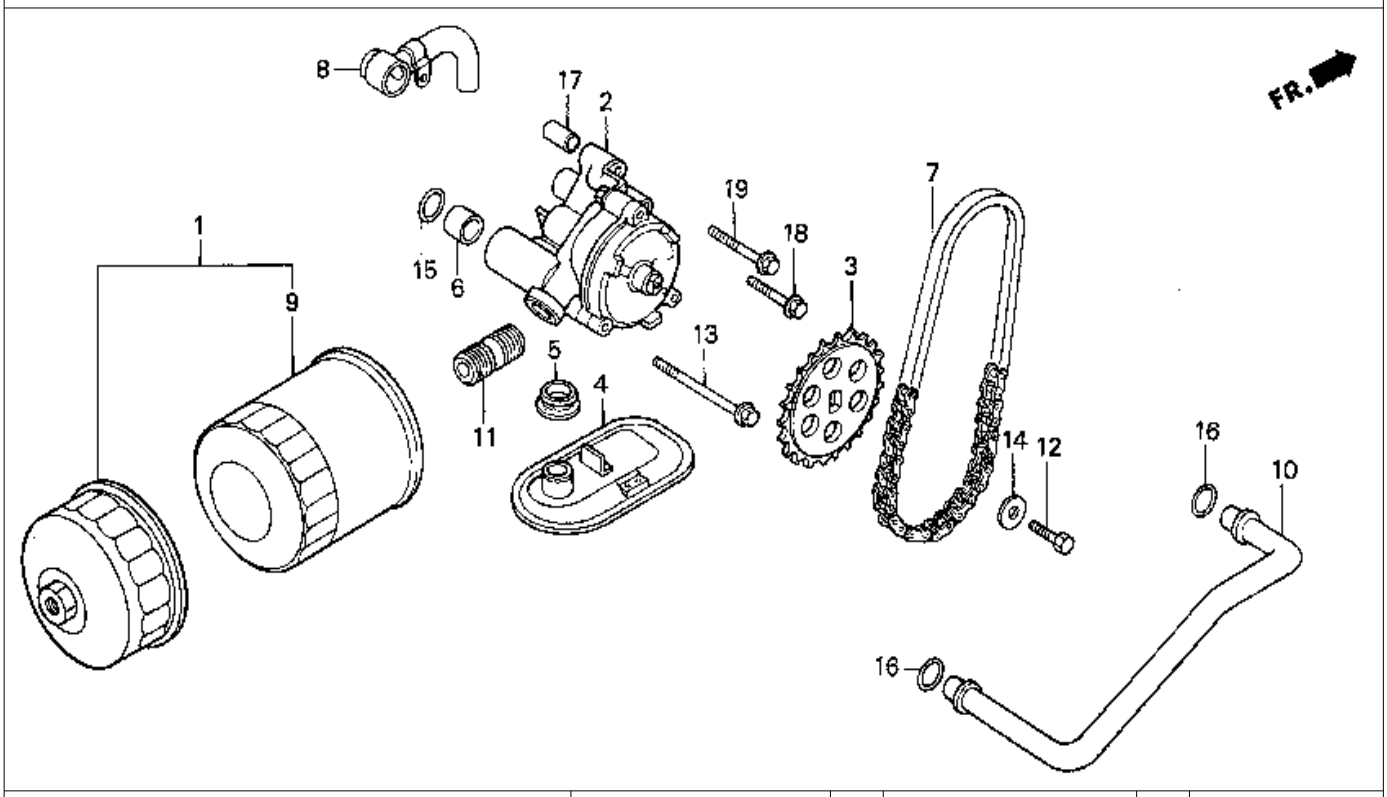

9 = PC800'89 6 = PC800'96
0 = PC800'90 7 = PC800'97
4 = PC800'94 8 = PC800'98
5 = PC800'95

Ref. No.	BLOCK NO. E-12 / DESCRIPTION	PC800 1989	1990	1994	1995	1996	1997	1998	AREA CODE	FRAME SERIAL NUMBER FROM	TO	QTY REQ	PART NUMBER
1	FILTER SET, OIL	..	..	4	5	6	7	8		.....	.....	(1)	15010-MW0-000
2	PUMP ASSY., OIL	9	0	4	5	6	7	8		.....	.....	1	15100-MR5-670
3	SPROCKET, OIL PUMP DRIVEN	9	..	..	..	..	..	..		.....	.....	1	15134-MR5-670
	SPROCKET, OIL PUMP DRIVEN	..	0	4	5	6	7	8		.....	.....	1	15134-MR5-870
4	STRAINER, OIL	9	0	..	..	..	..	..		.....	.....	1	15153-MK7-770
	STRAINER COMP., OIL	..	..	4	5	6	7	8		.....	.....	1	15153-MAA-000
5	GASKET, OIL STRAINER	9	0	4	5	6	7	8		.....	.....	1	15154-425-000
6	COLLAR, O-RING	9	0	4	5	6	7	8		.....	.....	1	15155-300-000
7	CHAIN, OIL PUMP	9	0	4	5	6	7	8		.....	.....	1	15161-ME5-003
8	PIPE, OIL RELIEF	9	0	4	5	6	7	8		.....	.....	1	15240-MG8-000
9	FILTER, OIL (TOYO)	9	0	..	..	..	..	..		.....	.....	1	15410-MM9-003
	FILTER, OIL (TOYO)	9	0	4	5	6	7	8		.....	.....	1	15410-MM9-013
	FILTER, OIL	9	0	4	5	6	7	8		.....	.....	1	15410-MM9-405
10	PIPE, OIL	9	0	4	5	6	7	8		.....	.....	1	15511-MG8-000
11	BOSS, OIL FILTER	9	0	4	5	6	7	8		.....	.....	1	90019--MB0-000
12	BOLT, HEX. (6X16)	9	0	4	5	6	7	8		.....	.....	1	90021-KE8-010

 © AMERICAN HONDA MOTOR CO. INC. 1997

OIL PUMP

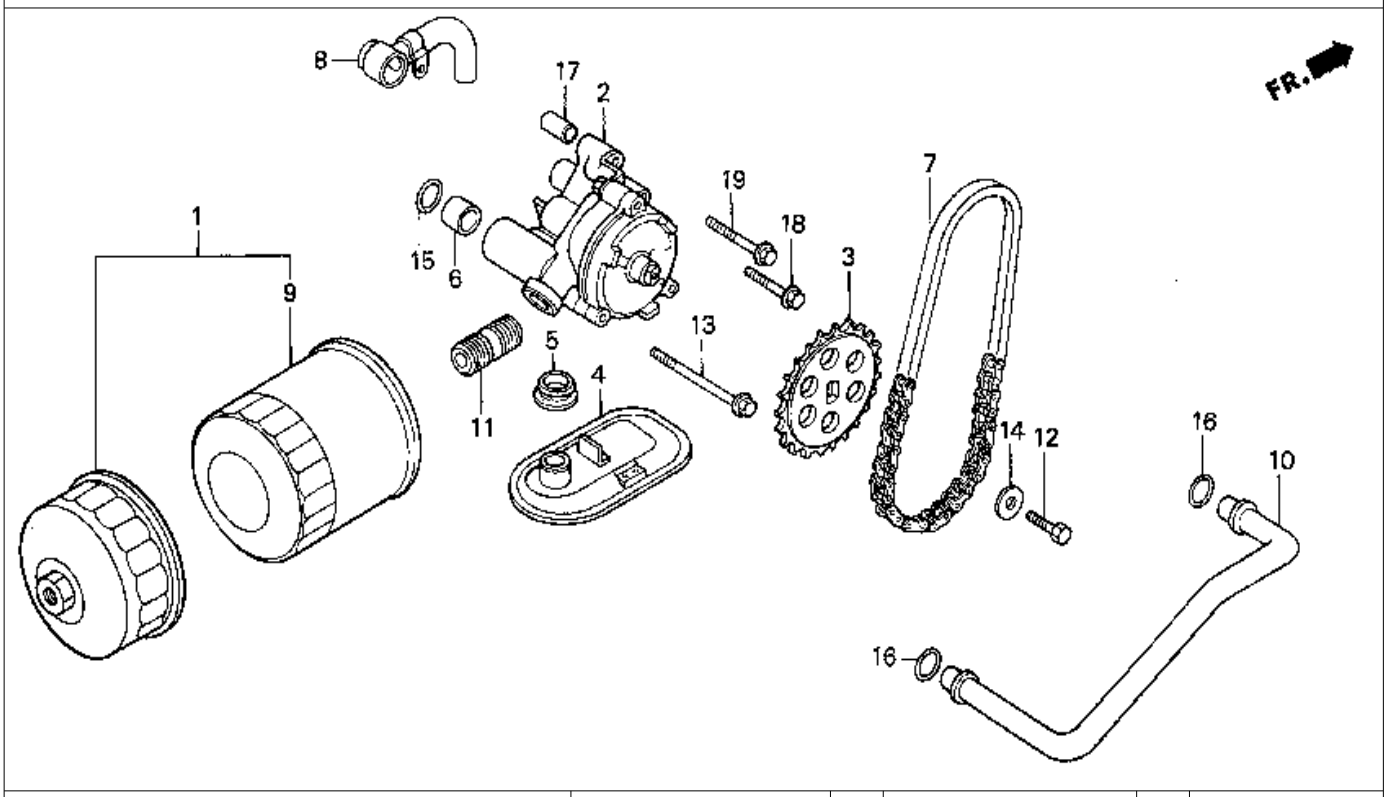

9 = PC800'89 6 = PC800'96
0 = PC800'90 7 = PC800'97
4 = PC800'94 8 = PC800'98
5 = PC800'95

Ref. No.	BLOCK NO. E-12 / DESCRIPTION	PC800 1989	1990	1994	1995	1996	1997	1998	AREA CODE	FRAME SERIAL NUMBER FROM	TO	QTY REQ	PART NUMBER
13	BOLT, FLANGE (6X75)	9	0	4	5	6	7	8		.....	.....	1	90052-ME9-000
14	WASHER, (6X2.3)	9	0	4	5	6	7	8		.....	.....	1	90488-MB0-000
15	O-RING (14.8X2.4)	9	0	4	5	6	7	8		.....	.....	1	91303-KF0-003
	O-RING (14.8X2.4) (NOK)	9	0	4	5	6	7	8		.....	.....	1	91356-MA6-005
16	O-RING (14.6X3.7) (ARAI)	9	0	4	5	6	7	8		.....	.....	2	91309-MB0-003
17	PIN A, DOWEL (8X14)	9	0	4	5	6	7	8		.....	.....	1	94301-08140
18	BOLT, FLANGE (6X32)	9	0	4	5	6	7	8		.....	.....	1	96001-06032-00
19	BOLT, FLANGE (6X40)	9	0	4	5	6	7	8		.....	.....	1	96001-06040-00

 © AMERICAN HONDA MOTOR CO. INC. 1997

CRANKCASE

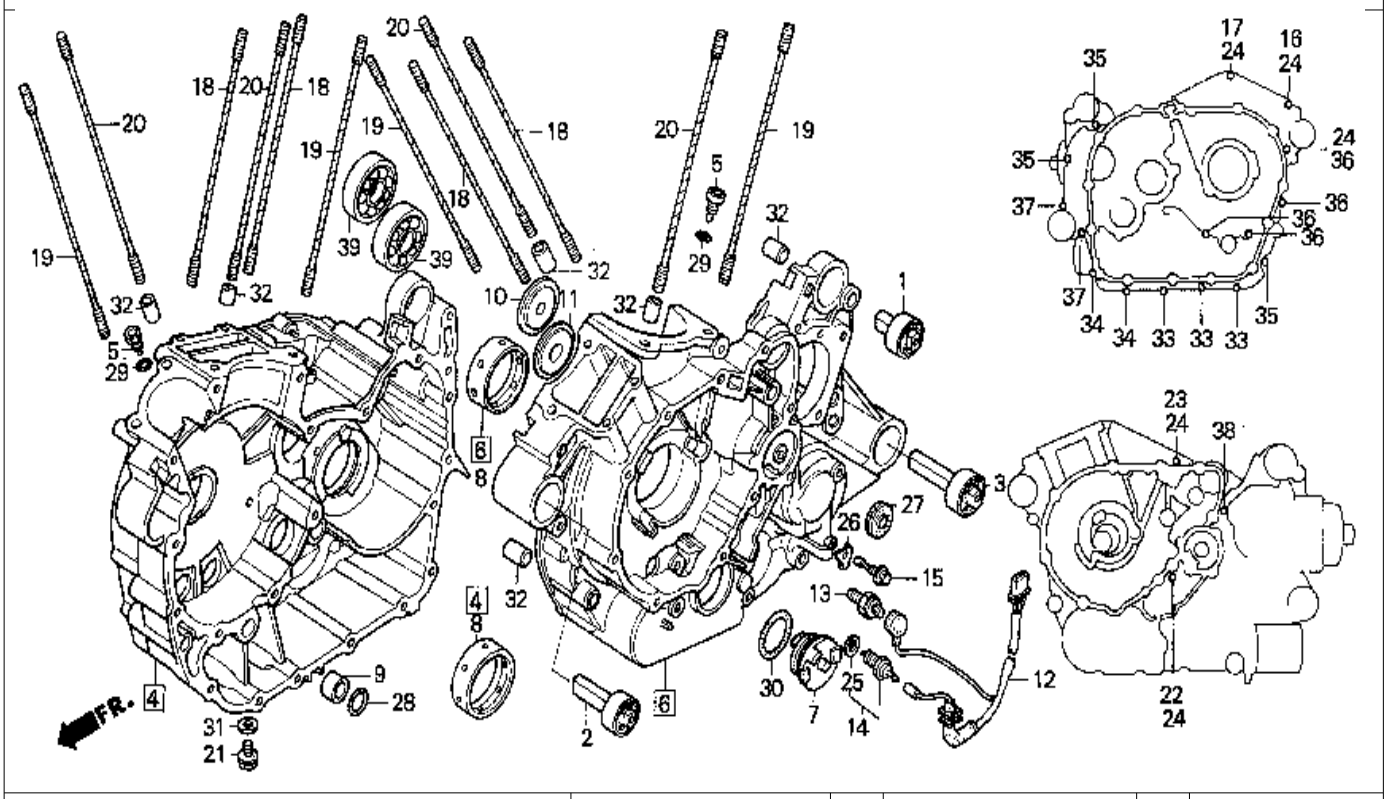

9 = PC800'89 6 = PC800'96
0 = PC800'90 7 = PC800'97
4 = PC800'94 8 = PC800'98
5 = PC800'95

Ref. No.	BLOCK NO. E-13 / DESCRIPTION	1989	1990	1994	1995	1996	1997	1998	AREA CODE	FRAME SERIAL NUMBER FROM	FRAME SERIAL NUMBER TO	QTY REQ	PART NUMBER
1	RUBBER A, ENGINE MOUNTING	9	0	4	5	6	7	8		.....	.....	2	10200-MR5-670
2	RUBBER B, ENGINE MOUNTING	9	0	4	5	6	7	8		.....	.....	2	10210-MR5-670
3	RUBBER C, ENGINE MOUNTING	9	0	4	5	6	7	8		.....	.....	2	10220-MR5-670
4	CRANKCASE COMP., R.	9	0	..	..	..	..	..		.....	.....	1	11100-MR5-670
	CRANKCASE COMP., R.	..	..	4	5	6	7	8		.....	.....	1	11100-MR5-671
5	JET, OIL	9	0	4	5	6	7	8		.....	.....	2	11146-ME9-000
6	CRANKCASE COMP., L.	9	0	4	5	6	7	8		.....	.....	1	11200-MR5-670
7	PLUG, L. CRANKCASE	9	0	..	..	..	..	..		.....	.....	1	11211-MR5-670
	PLUG, L. CRANKCASE	..	..	4	5	6	7	8		.....	.....	1	11211-MK7-770
8	BEARING A, MAIN (BLUE)	9	0	4	5	6	7	8		.....	.....	2	13325-ME9-305
	BEARING B, MAIN (BLACK)	9	0	4	5	6	7	8		.....	.....	2	13326-ME9-305
	BEARING C, MAIN (BROWN)	9	0	4	5	6	7	8		.....	.....	2	13327-ME9-305
9	COLLAR, O-RING	9	0	4	5	6	7	8		.....	.....	1	15155-300-000
10	GUIDE, LIFTER ROD	9	0	4	5	6	7	8		.....	.....	1	15171-ME9-000
11	PLATE, ORIFICE	9	0	4	5	6	7	8		.....	.....	1	15172-ME9-000
12	SUB-HARNESS, ENGINE	9	..	..	..	..	..	..		.....	.....	1	32101-MR5-000

 © AMERICAN HONDA MOTOR CO. INC. 1997

CRANKCASE

Main bearing selection
(Oil clearance 18~58 μm)

Crankcase I.D. 54φ \ Crankshaft O.D. 50φ	1	2
	0 ~ −0.008	−0.008~ −0.016
−0.030~ −0.020	Brown	Black
−0.020~ −0.010	Black	Blue

9 = PC800'89
0 = PC800'90
4 = PC800'94
5 = PC800'95
6 = PC800'96
7 = PC800'97
8 = PC800'98

Ref. No.	BLOCK NO. E-13 / DESCRIPTION	PC800 1989	1990	1994	1995	1996	1997	1998	AREA CODE	FRAME SERIAL NUMBER FROM	TO	QTY REQ	PART NUMBER
12	SUB-HARNESS, ENGINE	..	0	4	5	6	7	8		.....	.....	1	32101-MR5-870
13	SWITCH ASSY., OIL PRESSURE (ND)	9	0	..	..	..	..	..		.....	.....	1	35500-MJ4-014
	SWITCH ASSY., OIL PRESSURE (ND)	9	0	4	5	6	7	8		.....	.....	1	35500-MJ4-024
14	SWITCH ASSY., NEUTRAL	9	0	4	5	6	7	8		.....	.....	1	35600-425-023
15	BOLT, ORIFICE (1.6MM)	9	0	4	5	6	7	8		.....	.....	1	90002-MG8-000
16	BOLT, FLANGE (8X120)	9	0	4	5	6	7	8		.....	.....	1	90005-MK7-670
17	BOLT, FLANGE (8X135)	9	0	4	5	6	7	8		.....	.....	1	90006-MK7-670
18	BOLT, STUD (8X275)	9	0	4	5	6	7	8		.....	.....	4	90011-MR5-670
19	BOLT, STUD (10X270)	9	0	4	5	6	7	8		.....	.....	4	90012-MR5-670
20	BOLT, STUD (10X259)	9	0	4	5	6	7	8		.....	.....	4	90013-MR5-670
21	BOLT, PLUG (14MM)	9	0	4	5	6	..	..		.....	.....	1	90081-MC7-000
	BOLT, DRAIN PLUG (14MM)	..	..	..	..	..	7	8		.....	.....	1	92800-14000
22	BOLT, SOCKET (8X105)	9	0	4	5	6	7	8		.....	.....	1	90122-ME9-000
23	BOLT, SOCKET (8X120)	9	0	4	5	6	7	8		.....	.....	1	90126-MK7-670
24	WASHER, SEALING (7MM)	9	0	4	5	6	7	8		.....	.....	5	90441-ME9-000
25	WASHER, NEUTRAL SWITCH	9	0	4	5	6	7	8		.....	.....	1	90443-KR0-000

 © AMERICAN HONDA MOTOR CO. INC. 1997 D1

CRANKCASE

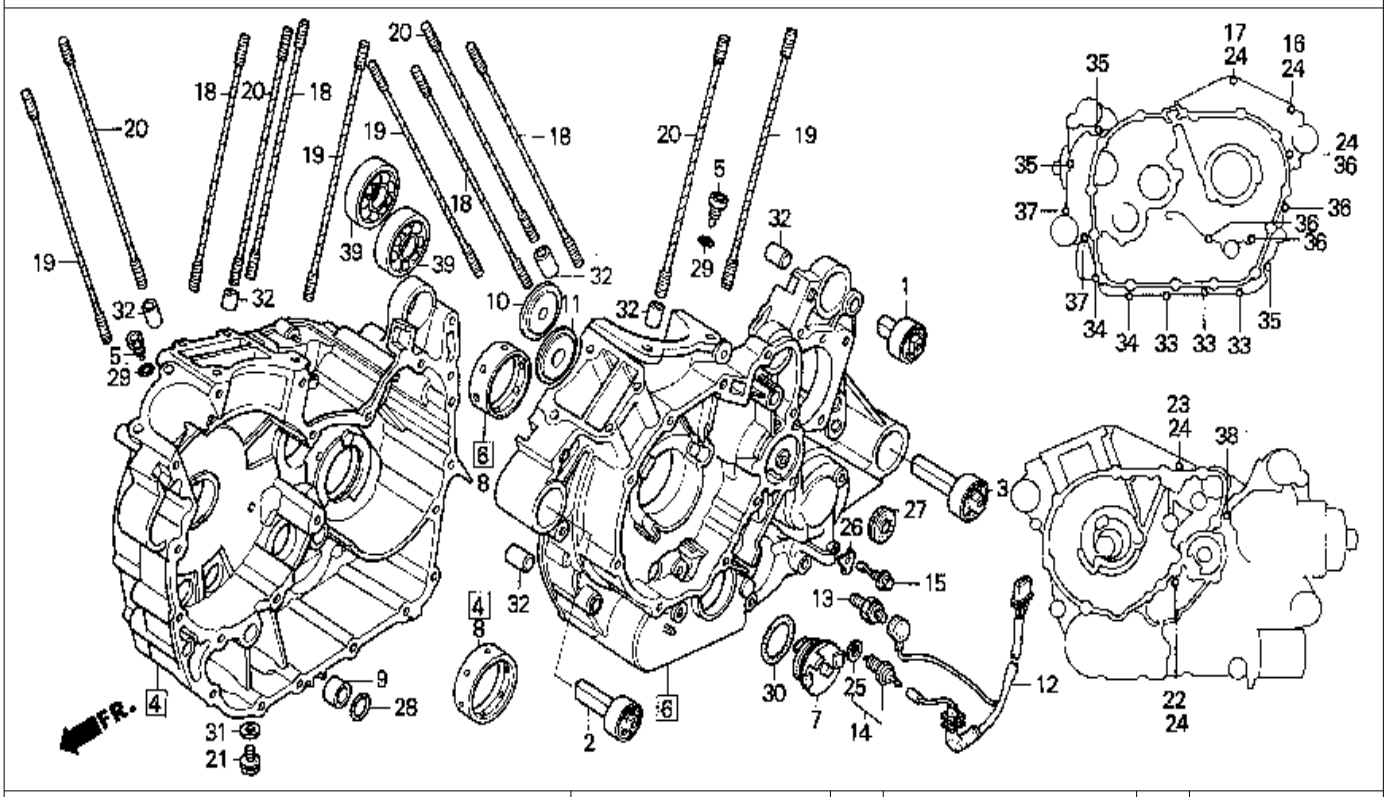

9 = PC800'89
0 = PC800'90
4 = PC800'94
5 = PC800'95
6 = PC800'96
7 = PC800'97
8 = PC800'98

Ref. No.	BLOCK NO. E-13 / DESCRIPTION	PC800 1989	1990	1994	1995	1996	1997	1998	AREA CODE	FRAME SERIAL NUMBER FROM	TO	QTY REQ	PART NUMBER
26	PLATE, SEALING (6MM)	9	0	4	5	6	7	8		.....	.....	1	90444-MG8-000
27	OIL SEAL (8X25X8) (ARAI)	9	0	4	5	6	7	8		.....	.....	1	91204-MB0-013
28	O-RING (14.8X2.4)	9	0	4	5	6	7	8		.....	.....	1	91303-KF0-003
	O-RING (14.8X2.4) (NOK)	9	0	4	5	6	7	8		.....	.....	1	91356-MA6-005
29	O-RING (5X1.7) (ARAI)	9	0	4	5	6	7	8		.....	.....	2	91305-MG7-003
30	O-RING (35.3X2.4) (NOK)	9	0	4	5	6	7	8		.....	.....	1	91351-MG7-004
31	WASHER, DRAIN PLUG (14MM)	9	0	4	5	6	7	8		.....	.....	1	94109-14000
32	PIN A, DOWEL (14X20)	9	0	4	5	6	7	8		.....	.....	6	94301-14200
33	BOLT, FLANGE (6X50)	9	0	4	5	6	7	8		.....	.....	3	95701-06050-00
34	BOLT, FLANGE (6X90)	9	0	4	5	6	7	8		.....	.....	2	95701-06090-00
35	BOLT, FLANGE (8X45)	9	0	4	5	6	7	8		.....	.....	3	95701-08045-00
36	BOLT, FLANGE (8X80)	9	0	4	5	6	7	8		.....	.....	4	95701-08080-00
37	BOLT, FLANGE (8X100)	9	0	4	5	6	7	8		.....	.....	2	95701-08100-00
38	BOLT, FLANGE (6X100)	9	0	4	5	6	7	8		.....	.....	1	95801-06100-00
39	BEARING, RADIAL BALL (6304)	9	0	4	5	6	7	8		.....	.....	2	96100-63040-00

 © AMERICAN HONDA MOTOR CO. INC. 1997

CRANKSHAFT

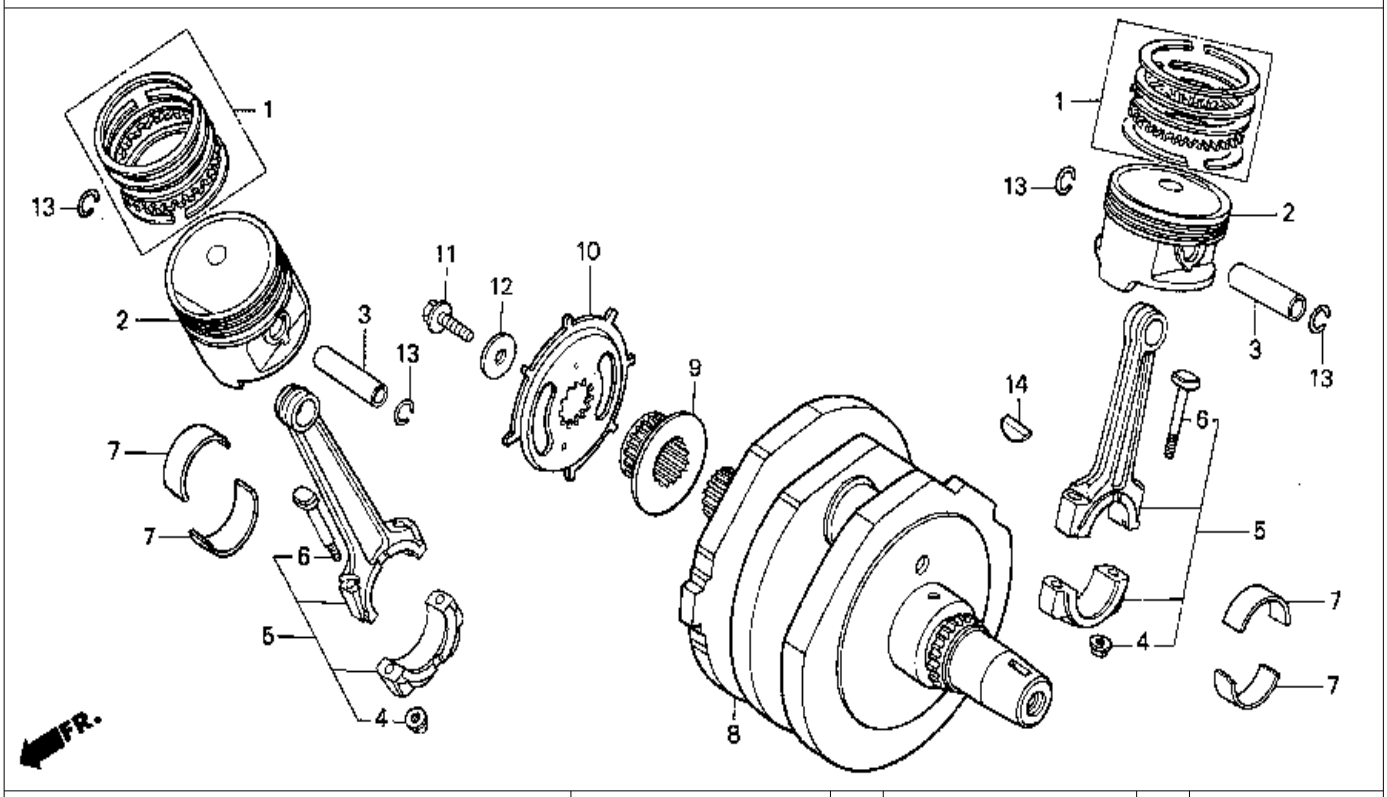

9 = PC800'89 6 = PC800'96
0 = PC800'90 7 = PC800'97
4 = PC800'94 8 = PC800'98
5 = PC800'95

Ref. No.	BLOCK NO. E-14 DESCRIPTION	PC800 1989 9	1990 0	1994 4	1995 5	1996 6	1997 7	1998 8	AREA CODE	FRAME SERIAL NUMBER FROM	TO	QTY REQ	PART NUMBER
1	RING SET, PISTON (STD)	9	0	4	5	6	7	8		.....	.....	2	13011-MR5-305
	RING SET, PISTON (0.25)	9	0	4	5	6	7	8		.....	.....	(2)	13021-MR5-305
	RING SET, PISTON (0.50)	9	0	4	5	6	7	8		.....	.....	(2)	13031-MR5-305
2	PISTON	9	0	4	5	6	7	8		.....	.....	2	13101-MR5-670
	PISTON (0.25)	9	0	4	5	6	7	8		.....	.....	(2)	13102-MR5-305
	PISTON (0.50)	9	0	4	5	6	7	8		.....	.....	(2)	13103-MR5-305
3	PIN, PISTON	9	0	4	5	6	7	8		.....	.....	2	13111-ME9-000
4	NUT, CONNECTING ROD	9	0	4	5	6	7	8		.....	.....	4	13205-ME2-000
5	ROD ASST. A, CONNECTING	9	0	4	5	6	7	8		.....	.....	2	13207-MR5-670
	ROD ASST. B, CONNECTING	9	0	4	5	6	7	8		.....	.....	2	13208-MR5-670
	ROD ASST. C, CONNECTING	9	0	4	5	6	7	8		.....	.....	2	13209-MR5-670
	ROD ASST. D, CONNECTING	9	0	4	5	6	7	8		.....	.....	2	13210-MR5-670
6	BOLT, CONNECTING ROD	9	0	4	5	6	7	8		.....	.....	4	13213-ME2-000
7	BEARING C, CONNECTING ROD (BROWN)	9	0	4	5	6	7	8		.....	.....	4	13217-MR5-671
	BEARING D, CONNECTING ROD (GREEN)	9	0	4	5	6	7	8		.....	.....	2	13218-MR5-671

 © AMERICAN HONDA MOTOR CO. INC. 1997

CRANKSHAFT

Connecting rod bearing selection
(Oil clearance 28~52 μm)

Connecting rod I.D. 46φ \ Crankpin O.D. 43φ		1	2
		−0.010~ −0.018	−0.018~ −0.026
1	0 ~ +0.008	Yellow	Green
2	+0.008~ +0.016	Green	Brown

Connecting rod selection

RR. \ FR.	13207-MR5-670	13208-MR5-670	13209-MR5-670	13210-MR5-670
13207-MR5-670	○	○	×	×
13208-MR5-670	○	○	○	×
13209-MR5-670	×	○	○	○
13210-MR5-670	×	×	○	○

9 = PC800'89
0 = PC800'90
4 = PC800'94
5 = PC800'95
6 = PC800'96
7 = PC800'97
8 = PC800'98

Ref. No.	BLOCK NO. E-14 / DESCRIPTION	PC800 1989	1990	1994	1995	1996	1997	1998	AREA CODE	FRAME SERIAL NUMBER FROM	TO	QTY REQ	PART NUMBER
7	BEARING E, CONNECTING ROD (YELLOW)	9	0	4	5	6	7	8		.....	.....	4	13219-MR5-671
8	CRANKSHAFT COMP.	9	0	4	5	6	7	8		.....	.....	1	13300-MR5-670
9	SPROCKET, CAM CHAIN DRIVE	9	0	4	5	6	7	8		.....	.....	1	14311-ME9-000
10	PLATE, PULSER	9	0	4	5	6	7	8		.....	.....	1	30211-MR5-000
11	BOLT, FLANGE (12X35	9	0	4	5	6	7	8		.....	.....	1	90025-MK7-670
12	WASHER (12.5X34X5)	9	0	4	5	6	7	8		.....	.....	1	90402-PC6-000
13	CLIP, PISTON PIN (1.2X20)	9	0	4	5	6	7	8		.....	.....	4	90601-KA5-000
14	KEY, WOODRUFF	9	0	4	5	6	7	8		.....	.....	1	90741-413-000

 © AMERICAN HONDA MOTOR CO. INC. 1997

TRANSMISSION

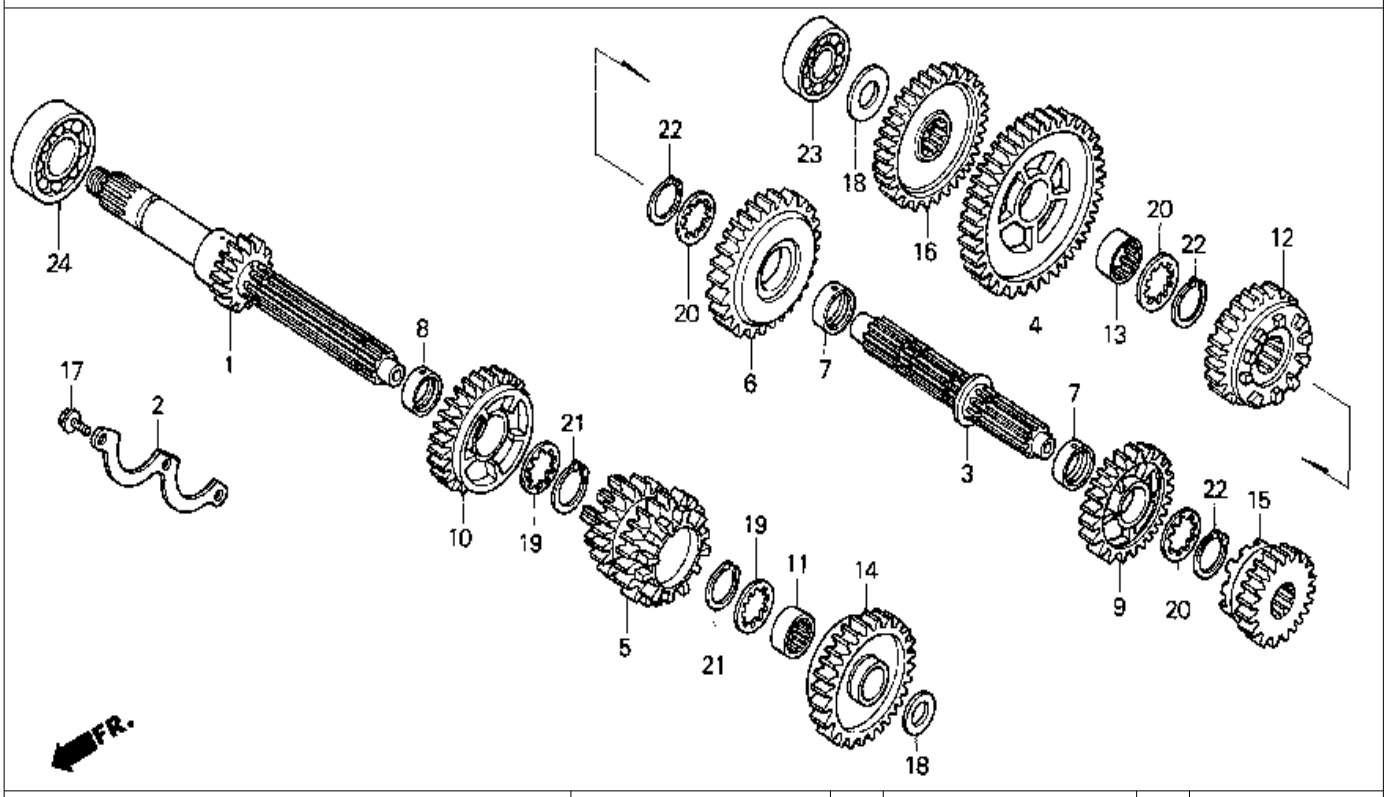

9 = PC800'89	6 = PC800'96	PC800							AREA CODE	FRAME SERIAL NUMBER		QTY REQ	
0 = PC800'90	7 = PC800'97												
4 = PC800'94	8 = PC800'98												
5 = PC800'95													
		1989	1990	1994	1995	1996	1997	1998					
Ref. No.	BLOCK NO. E-15 DESCRIPTION	9	0	4	5	6	7	8		FROM	TO		PART NUMBER
1	MAINSHAFT	9	..	..	..	..	..	..		.....	.....	1	23211-MR5-670
	MAINSHAFT	..	0	4	5	6	7	8		.....	.....	1	23211-MR5-870
2	PLATE, BEARING	9	0	4	5	6	7	8		.....	.....	1	23212-MK7-670
3	COUNTERSHAFT	9	0	4	5	6	7	8		.....	.....	1	23220-MR5-670
4	GEAR, COUNTERSHAFT LOW (39T)	9	0	4	5	6	7	8		.....	.....	1	23421-MR5-670
5	GEAR, MAINSHAFT SECOND & THIRD (20T,24T)	9	..	..	..	..	..	..		.....	.....	1	23431-MR5-670
	GEAR, MAINSHAFT SECOND	9	..	..	..	..	..	..		.....	.....	1	23431-MR5-671
	GEAR, MAINSHAFT SECOND & THIRD (20T,24T)	..	0	4	5	6	7	8		.....	.....	1	23431-MR5-870
6	GEAR, COUNTERSHAFT SECOND (34T)	9	0	4	5	6	7	8		.....	.....	1	23441-MR5-670
7	BUSH (28X31X10)	9	0	4	5	6	7	8		.....	.....	2	23442-MR5-670
8	BUSH, COUNTERSHAFT THIRD	9	0	4	5	6	7	8		.....	.....	1	23455-HA7-670
9	BUSH, COUNTERSHAFT THIRD (30T)	9	0	4	5	6	7	8		.....	.....	1	23461-MR5-670
10	GEAR, MAINSHAFT FOURTH (28T)	9	0	4	5	6	7	8		.....	.....	1	23471-MR5-670
11	COLLAR, SPLIND (25X28X15)	9	0	4	5	6	7	8		.....	.....	1	23472-MR1-000

 © AMERICAN HONDA MOTOR CO. INC. 1997

TRANSMISSION

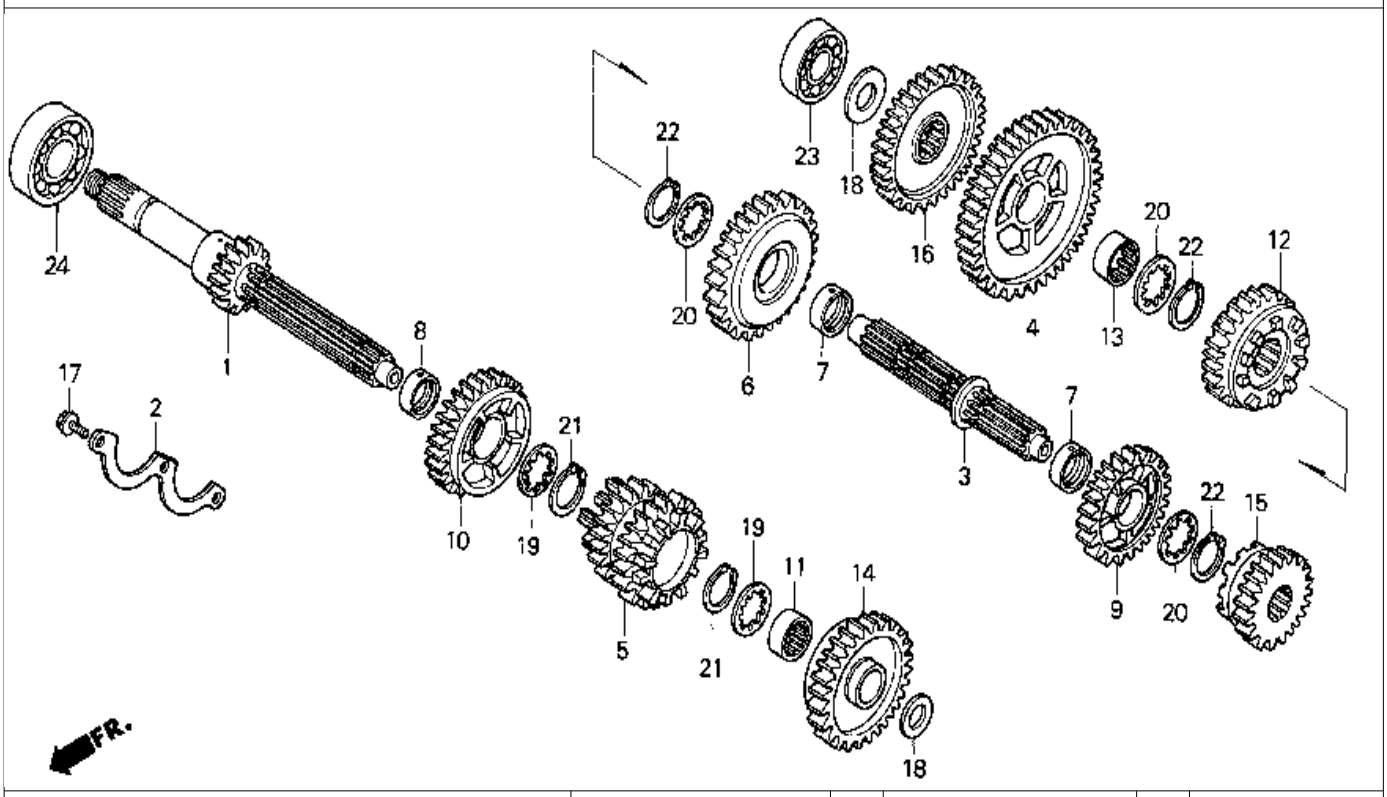

9 = PC800'89 6 = PC800'96
0 = PC800'90 7 = PC800'97
4 = PC800'94 8 = PC800'98
5 = PC800'95

Ref. No.	BLOCK NO. E-15 / DESCRIPTION	PC800 1989	1990	1994	1995	1996	1997	1998	AREA CODE	FRAME SERIAL NUMBER FROM	TO	QTY REQ	PART NUMBER
12	GEAR, COUNTERSHAFT FOURTH (27T)	9	0	4	5	6	7	8		.....	.....	1	23481-MR5-670
13	COLLAR, SPLINE (28X31X10)	9	0	4	5	6	7	8		.....	.....	1	23482-MR5-670
14	GEAR, MAINSHAFT FIFTH (30T)	9	..	..	..	..	..	..		.....	.....	1	23491-MR5-670
	GEAR, MAINSHAFT FIFTH (30T)	..	0	4	5	6	7	8		.....	.....	1	23491-MR5-870
15	GEAR, COUNTERSHAFT FIFTH (24T)	9	0	4	5	6	7	8		.....	.....	1	23501-MR5-670
16	GEAR, FINAL DRIVE (34T)	9	0	4	5	6	7	8		.....	.....	1	23725-MR5-670
17	BOLT, FLANGE (6X16)	9	0	4	5	6	..	..		.....	.....	3	90001-GHB-630
	BOLT, FLANGE (6X16) (NSHF)	..	..	..	..	..	7	8		.....	.....	3	90004-GHB-630
18	WASHER (20X37X2)	9	0	4	5	6	7	8		.....	.....	2	90404-KK0-000
19	WASHER, SPLINE (25X31X1.5)	9	0	4	5	6	7	8		.....	.....	2	90451-KY2-000
20	WASHER, SPLINE (28X34X1.5)	9	0	4	5	6	7	8		.....	.....	3	90452-MR7-000
21	CIRCLIP (25MM)	9	0	4	5	6	7	8		.....	.....	2	90601-107-000
22	CIRCLIP (28MM)	9	0	4	5	6	7	8		.....	.....	3	90602-MM5-000
	CIRCLIP (28MM)	9	0	4	5	6	7	8		.....	.....	3	90603-MN4-000
23	BEARING, RADIAL BALL (6304)	9	0	4	5	6	7	8		.....	.....	1	96100-63040-00
24	BEARING, RADIAL BALL (6305)	9	0	4	5	6	7	8		.....	.....	1	96100-63050-00

 © AMERICAN HONDA MOTOR CO. INC. 1997

GEARSHIFT DRUM

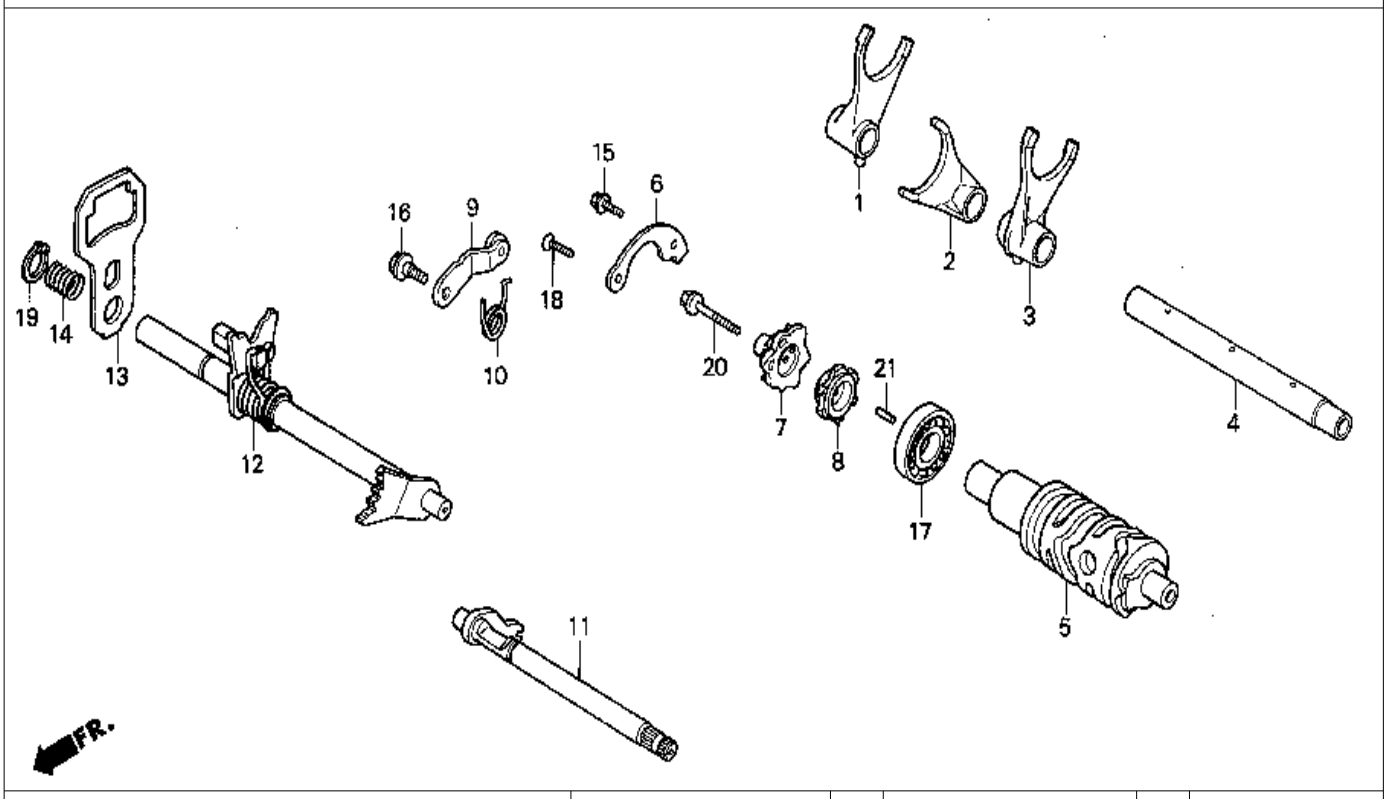

9 = PC800'89 6 = PC800'96
0 = PC800'90 7 = PC800'97
4 = PC800'94 8 = PC800'98
5 = PC800'95

Ref. No.	BLOCK NO. E-16 / DESCRIPTION	PC800 1989	1990	1994	1995	1996	1997	1998	AREA CODE	FRAME SERIAL NUMBER FROM	TO	QTY REQ	PART NUMBER
1	FORK, R. GEARSHIFT	9	..	..	..	..	..	..		.....	.....	1	24211-MR5-670
	FORK, R. GEARSHIFT	..	0	4	5	6	7	8		.....	.....	1	24211-MR5-870
2	FORK, CENTER GEARSHIFT	9	0	4	5	6	7	8		.....	.....	1	24212-MR5-670
3	FORK, L GEARSHIFT	9	..	..	..	..	..	..		.....	.....	1	24213-MR5-670
	FORK, L GEARSHIFT	..	0	4	5	6	7	8		.....	.....	1	24213-MR5-870
4	SHAFT COMP., GEARSHIFT FORK	9	0	4	5	6	7	8		.....	.....	1	24261-MR5-670
5	DRUM, GEARSHIFT	9	0	4	5	6	7	8		.....	.....	1	24302-MR5-670
6	PLATE, SHIFT DRUM GEARING SETTING	9	0	4	5	6	7	8		.....	.....	1	24310-MK7-670
7	CAM, GEARSHIFT	9	0	4	5	6	7	8		.....	.....	1	24411-MR5-671
8	ROTOR, POSITIVE STOPPER	9	0	4	5	6	7	8		.....	.....	1	24413-KA6-003
9	STOPPER COMP., GEARSHIFT SHAFT	9	0	4	5	6	7	8		.....	.....	1	24430-MR5-670
10	SPRING, GEARSHIFT DRUM STOPPER	9	0	4	5	6	7	8		.....	.....	1	24435-ME9-000
11	SPINDLE COMP. A, GEARSHIFT	9	0	4	5	6	7	8		.....	.....	1	24610-MR5-670
12	SPINDLE COMP., GEARSHIFT (B)	9	0	4	5	6	7	8		.....	.....	1	24615-MR5-670
13	PLATE, GEARSHIFT	9	0	4	5	6	7	8		.....	.....	1	24621-MG8-000
14	SPRING, GEARSHIFT PLATE	9	0	4	5	6	7	8		.....	.....	1	24631-362-000

 © AMERICAN HONDA MOTOR CO. INC. 1997

GEARSHIFT DRUM

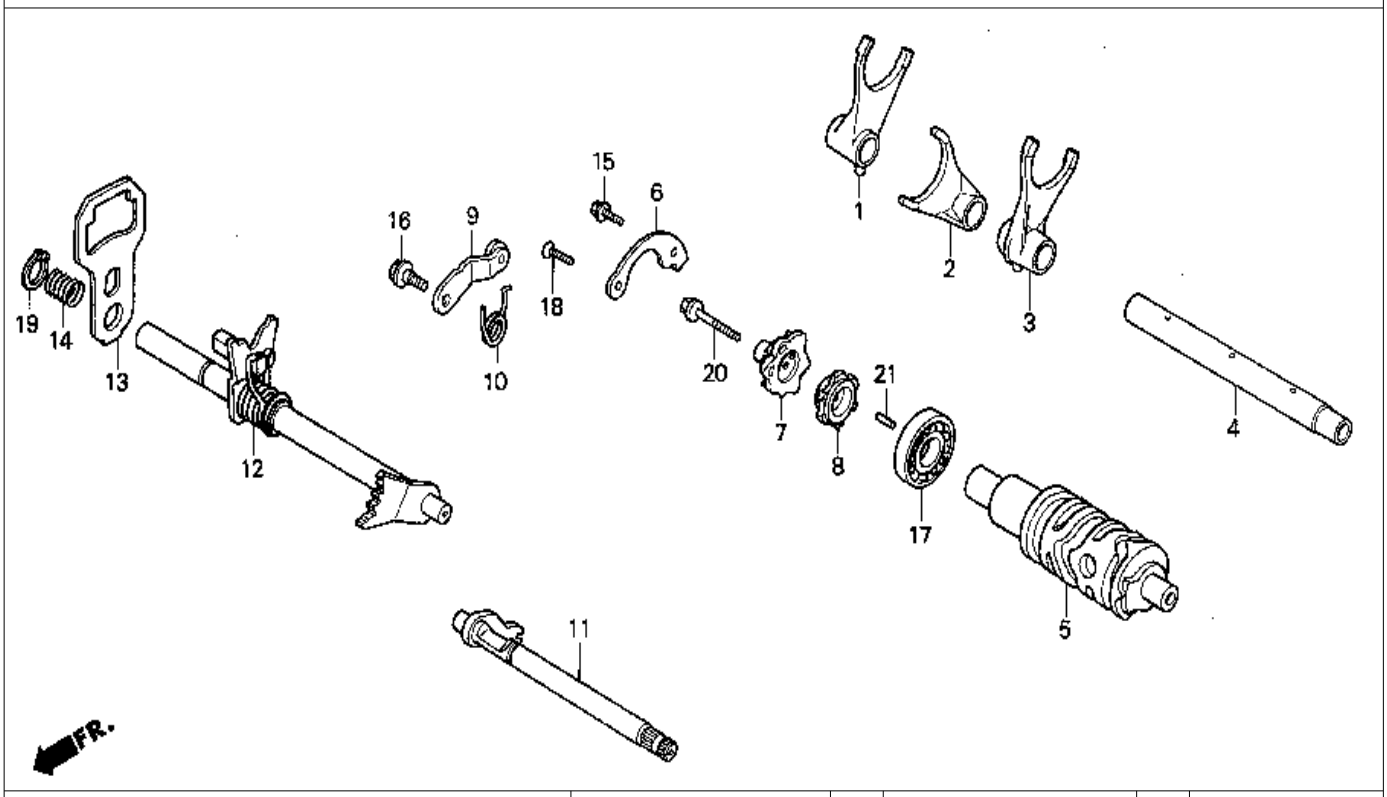

9 = PC800'89 6 = PC800'96
0 = PC800'90 7 = PC800'97
4 = PC800'94 8 = PC800'98
5 = PC800'95

Ref. No.	BLOCK NO. E-16 / DESCRIPTION	PC800 1989	1990	1994	1995	1996	1997	1998	AREA CODE	FRAME SERIAL NUMBER FROM	TO	QTY REQ	PART NUMBER
15	BOLT, FLANGE (6X16)	9	0	4	5	6	..	..		.....	.....	1	90001-GHB-630
	BOLT, FLANGE (6X16) (NSHF)	..	..	..	..	..	7	8		.....	.....	1	90004-GHB-630
16	BOLT, GEARSHIFT DRUM STOPPER ARM PIVOT	9	0	4	5	6	7	8		.....	.....	1	90023-MR5-670
17	BEARING, RADIAL BALL (17X32X7) (KOYO)	9	0	4	5	6	7	8		.....	.....	1	91006-MG8-003
18	SCREW, FLAT (6X16)	9	0	4	5	6	7	8		.....	.....	1	93600-06016-0A
19	CIRCLIP (OUTER) (12MM)	9	0	4	5	6	7	8		.....	.....	1	94510-12000
20	BOLT, FLANGE (6X32)	9	0	4	5	6	7	8		.....	.....	1	95701-06032-00
21	ROLLER (3X10)	9	0	4	5	6	7	8		.....	.....	1	96222-30100

 © AMERICAN HONDA MOTOR CO. INC. 1997

WATER PIPE

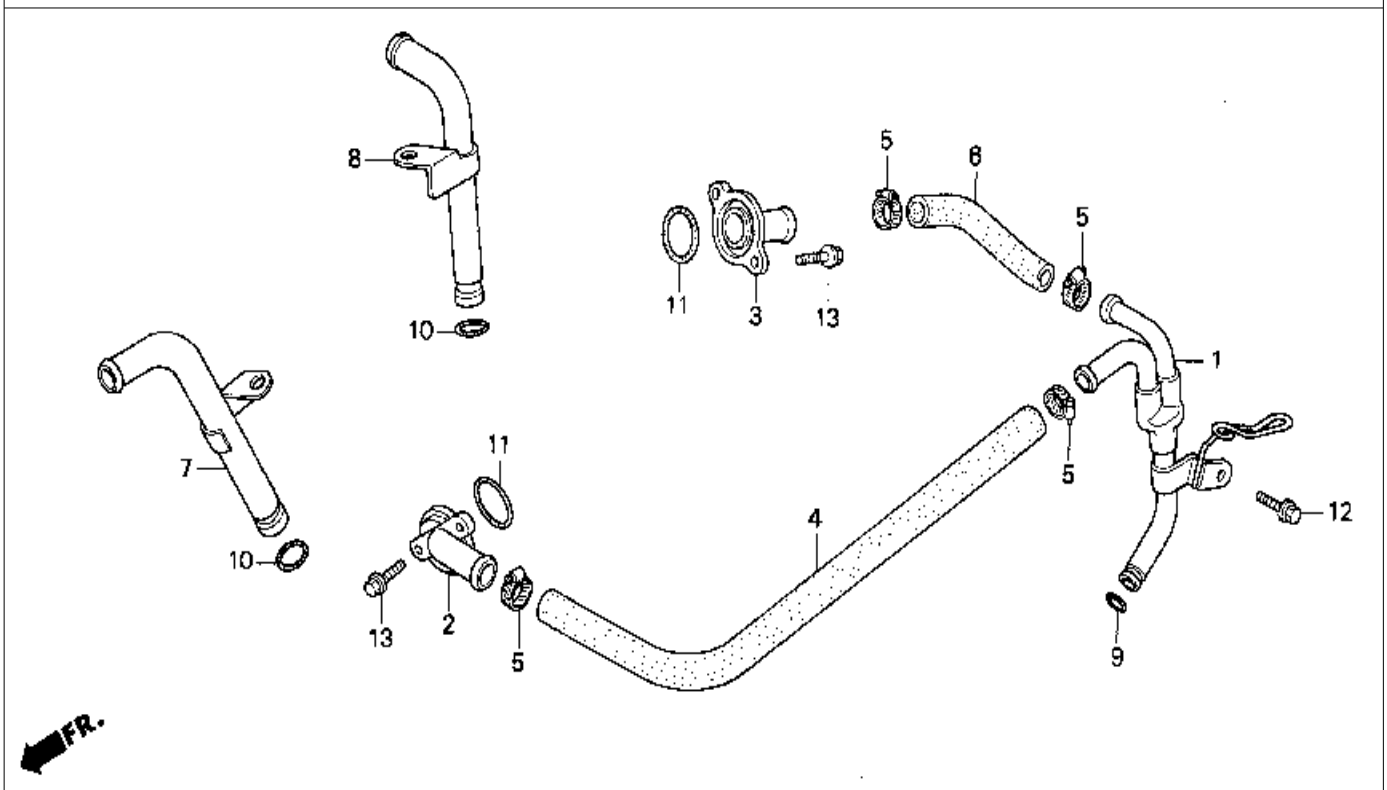

9 = PC800'89 6 = PC800'96
0 = PC800'90 7 = PC800'97
4 = PC800'94 8 = PC800'98
5 = PC800'95

Ref. No.	BLOCK NO. E-17 / DESCRIPTION	PC800 1989	1990	1994	1995	1996	1997	1998	AREA CODE	FRAME SERIAL NUMBER FROM	TO	QTY REQ	PART NUMBER
1	PIPE, INLET WATER	9	0	4	5	6	7	8		.....	.....	1	19501-MR5-670
2	JOINT A, WATER HOSE	9	0	4	5	6	7	8		.....	.....	1	19503-MG8-000
3	JOINT B, WATER HOSE	9	0	4	5	6	7	8		.....	.....	1	19504-MG8-000
4	HOSE A, IN. WATER	9	0	4	5	6	7	8		.....	.....	1	19505-MR5-670
5	CLAMP, WATER HOSE (B)	9	0	4	5	6	7	8		.....	.....	4	19506-KS6-700
6	HOSE B, IN. WATER	9	0	4	5	6	7	8		.....	.....	1	19506-MR5-670
7	PIPE, FR. OUTLET WATER	9	0	4	5	6	7	8		.....	.....	1	19511-MR5-670
8	PIPE, RR. OUTLET WATER	9	0	4	5	6	7	8		.....	.....	1	19512-MR5-670
9	O-RING (18.5X2.4) (ARAI)	9	0	4	5	6	7	8		.....	.....	1	91311-MB0-003
10	SEAL, WATER PIPE (NOK)	9	0	..	..	..	..	..		.....	.....	2	91315-ME9-004
	SEAL, WATER PIPE (ARAI)	9	0	4	5	6	7	8		.....	.....	2	91315-ME9-003
11	O-RING	9	0	4	5	6	7	8		.....	.....	2	91356-169-003
12	BOLT, FLANGE (6X16)	9	0	4	5	6	7	8		.....	.....	1	95701-06016-00
13	BOLT, FLANGE (6X20)	9	0	4	5	6	7	8		.....	.....	4	95701-06020-00

 © AMERICAN HONDA MOTOR CO. INC. 1997

CROSS SHAFT

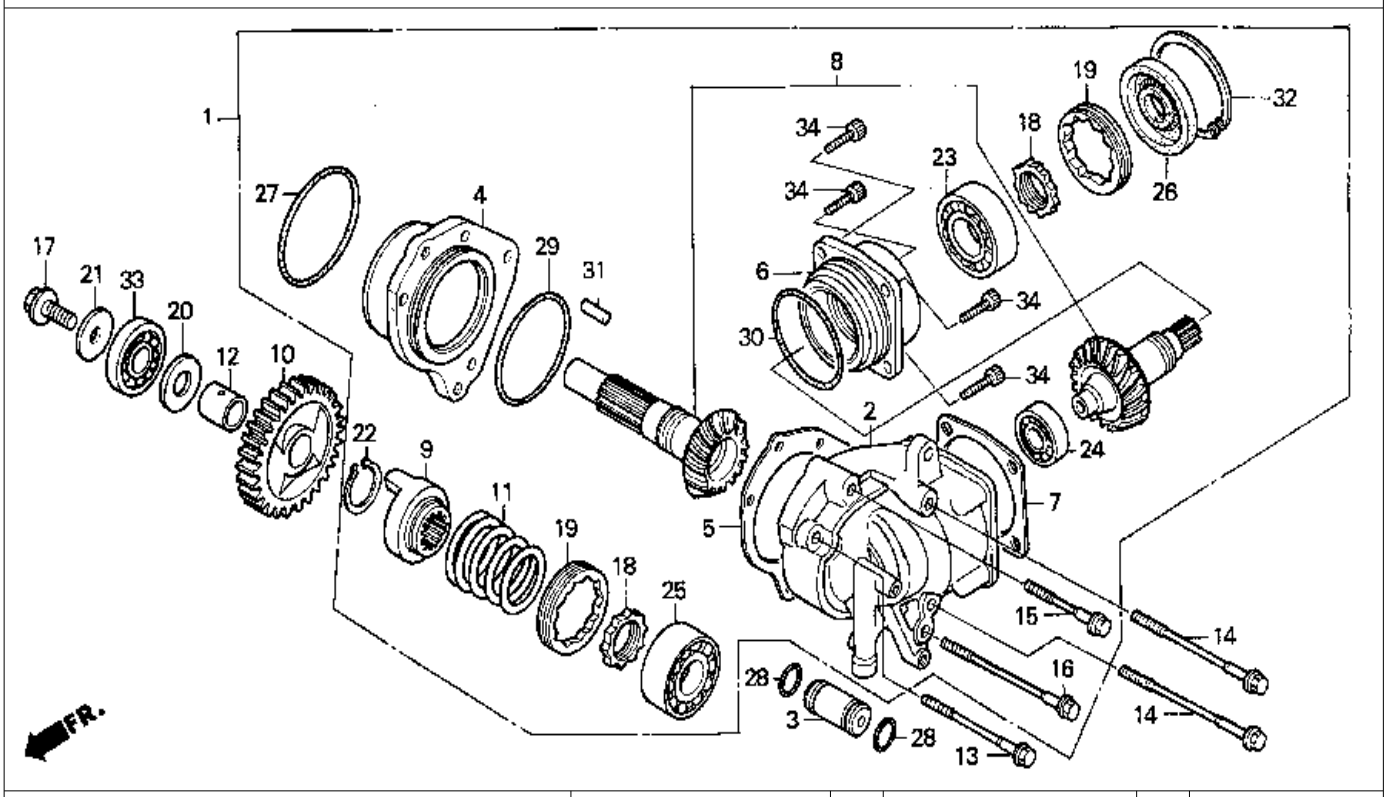

9 = PC800'89 6 = PC800'96
0 = PC800'90 7 = PC800'97
4 = PC800'94 8 = PC800'98
5 = PC800'95

Ref. No.	BLOCK NO. E-18 DESCRIPTION	PC800 1989 9	1990 0	1994 4	1995 5	1996 6	1997 7	1998 8	AREA CODE	FRAME SERIAL NUMBER FROM	TO	QTY REQ	PART NUMBER
1	CASE ASSY., SIDE GEAR	9	0	4	5	6	7	8		.....	.....	1	21100-MR5-670
2	CASE COMP., SIDE GEAR	9	0	4	5	6	7	8		.....	.....	1	21200-MR5-670
3	ORIFICE, SIDE GEAR CASE	9	0	4	5	6	7	8		.....	.....	1	21215-ME9-000
4	HOLDER, FINAL DRIVESHAFT BEARING	9	0	4	5	6	7	8		.....	.....	1	21281-MR5-670
5	SHIM, FINAL DRIVESHAFT (0.40)	9	0	4	5	6	7	8		.....	.....	1	21311-MG8-000
	SHIM, FINAL DRIVESHAFT (0.45)	9	0	4	5	6	7	8		.....	.....	1	21312-MG8-000
	SHIM, FINAL DRIVESHAFT (0.50)	9	0	4	5	6	7	8		.....	.....	1	21313-MG8-000
	SHIM, FINAL DRIVESHAFT (0.55)	9	0	4	5	6	7	8		.....	.....	1	21314-MG8-000
	SHIM, FINAL DRIVESHAFT (0.60)	9	0	4	5	6	7	8		.....	.....	1	21315-MG8-000
6	HOLDER, CROSS SHAFT BEARNG	9	0	4	5	6	7	8		.....	.....	1	21371-MM8-680
7	SHIM, CROSS SHAFT (0.20)	9	0	4	5	6	7	8		.....	.....	1	21377-MB0-770
	SHIM, CROSS SHAFT (0.25)	9	0	4	5	6	7	8		.....	.....	1	21378-MB0-770
	SHIM, CROSS SHAFT (0.30)	9	0	4	5	6	7	8		.....	.....	1	21379-MB0-770
	SHIM, CROSS SHAFT (0.35)	9	0	4	5	6	7	8		.....	.....	1	21380-MB0-770
	SHIM, CROSS SHAFT (0.40)	9	0	4	5	6	7	8		.....	.....	1	21381-MB0-770
	SHIM, CROSS SHAFT (0.45)	9	0	4	5	6	7	8		.....	.....	1	21382-MB0-770

 © AMERICAN HONDA MOTOR CO. INC. 1997

CROSS SHAFT

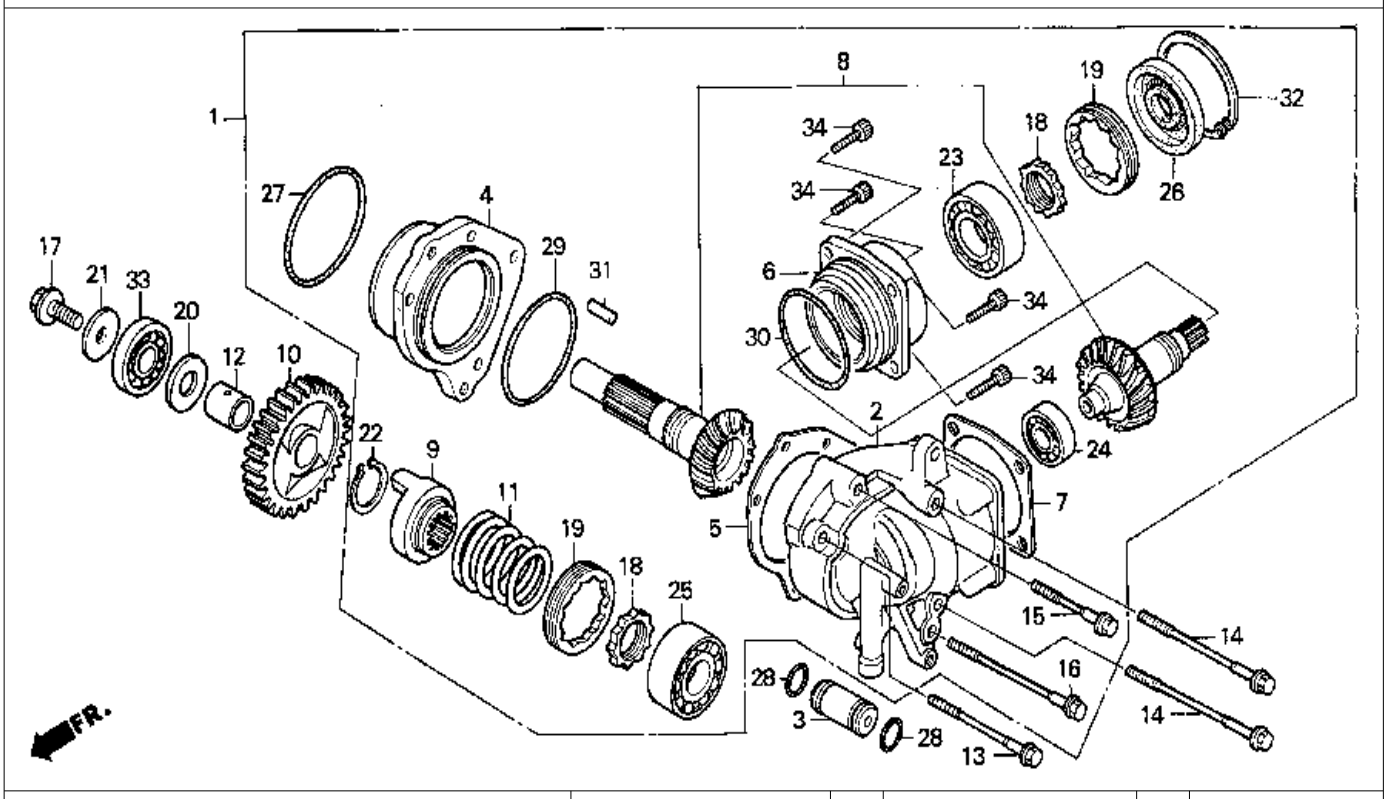

9 = PC800'89 6 = PC800'96
0 = PC800'90 7 = PC800'97
4 = PC800'94 8 = PC800'98
5 = PC800'95

Ref. No.	BLOCK NO. E-18 / DESCRIPTION	1989 / 9	1990 / 0	1994 / 4	1995 / 5	1996 / 6	1997 / 7	1998 / 8	AREA CODE	FRAME SERIAL NUMBER FROM	TO	QTY REQ	PART NUMBER
7	SHIM, CROSS SHAFT (0.50)	9	0	4	5	6	7	8		.....	.....	1	21383-MB0-770
	SHIM, CROSS SHAFT (0.55)	9	0	4	5	6	7	8		.....	.....	1	21384-MB0-770
	SHIM, CROSS SHAFT (0.60)	9	0	4	5	6	7	8		.....	.....	1	21385-MB0-770
8	SHAFT SET, CROSS	9	0	4	5	6	7	8		.....	.....	1	23200-MR5-670
9	LIFTER, DAMPER	9	0	4	5	6	7	8		.....	.....	1	23721-ME9-000
10	GEAR, DAMPER SHAFT (29T)	9	0	4	5	6	7	8		.....	.....	1	23726-MR5-670
11	SPRING, DAMPER	9	0	4	5	6	7	8		.....	.....	1	23732-MR5-670
12	COLLAR (20X24X18.5)	9	0	4	5	6	7	8		.....	.....	1	23733-ME9-000
13	BOLT, UBS (8X60)	9	0	4	5	6	7	8		.....	.....	1	90029-MG8-000
14	BOLT, UBS (8X105)	9	0	4	5	6	7	8		.....	.....	2	90030-MG8-000
15	BOLT, UBS (8X45)	9	0	4	5	6	7	8		.....	.....	1	90031-MG8-000
16	BOLT, UBS (8X85)	9	0	4	5	6	7	8		.....	.....	1	90032-MG8-000
17	BOLT, SPECIAL (10MM)	9	0	4	5	6	7	8		.....	.....	1	90037-ME9-000
18	NUT, LOCK (30MM)	9	0	4	5	6	7	8		.....	.....	2	90241-MB0-000
19	NUT, LOCK (20MM)	9	0	4	5	6	7	8		.....	.....	2	90242-MB0-000
20	WASHER, THRUST (20MM0	9	0	4	5	6	7	8		.....	.....	1	90451-426-000

 © AMERICAN HONDA MOTOR CO. INC. 1997

CROSS SHAFT

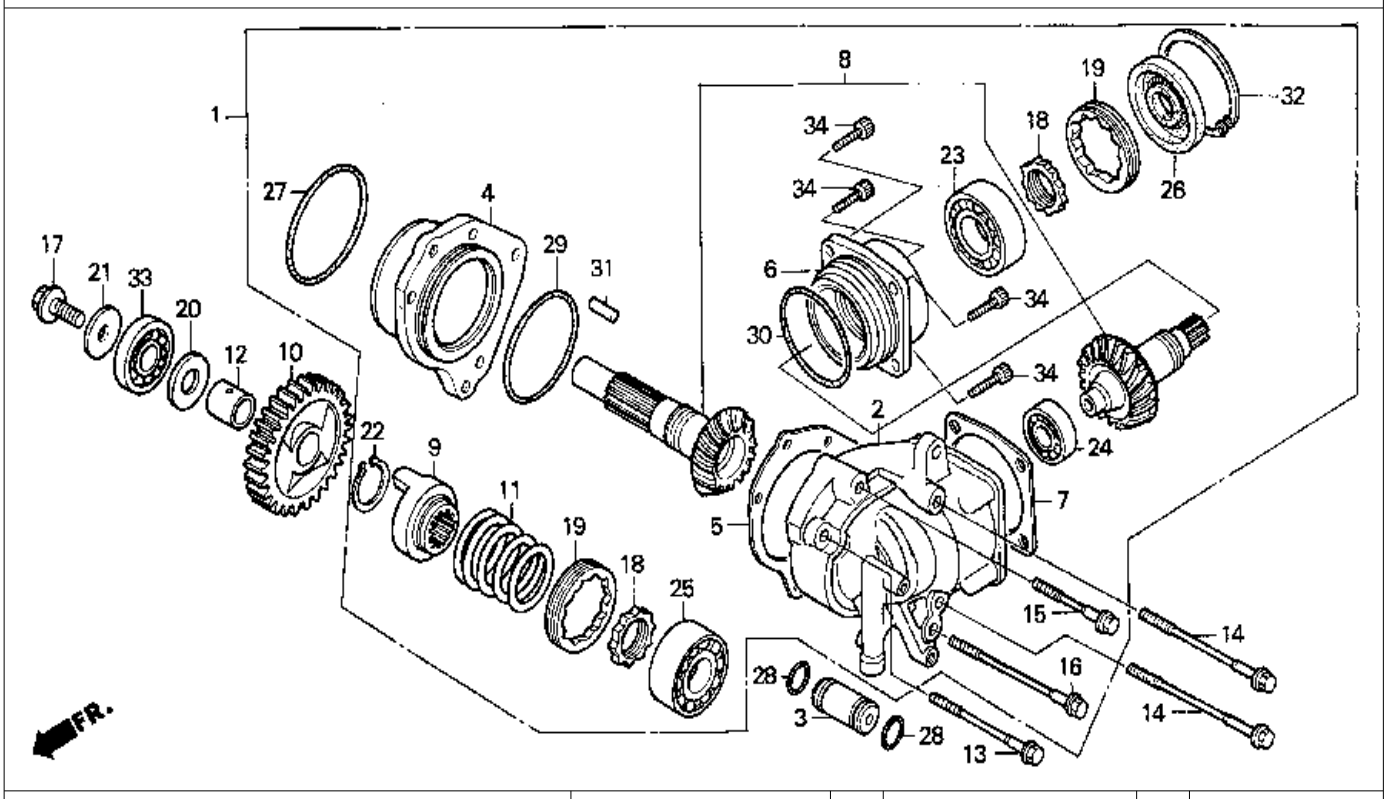

9 = PC800'89	6 = PC800'96								A				
0 = PC800'90	7 = PC800'97			PC800					R				
4 = PC800'94	8 = PC800'98								E			Q	
5 = PC800'95									A			T	
			1	1	1	1	1	1	1			Y	
			9	9	9	9	9	9	9	C			
			8	9	9	9	9	9	9	O	FRAME	R	
Ref.	BLOCK NO.	E-18	9	0	4	5	6	7	8	D	SERIAL NUMBER	E	
No.	DESCRIPTION		9	0	4	5	6	7	8	E	FROM TO	Q	PART NUMBER
21	WASHER (10.2MM)		9	0	4	5	6	7	8		....	1	90459-438-000
22	CIRCLIP (OUTER) (28MM)		9	0	4	5	6	7	8		....	1	90602-463-000
23	BEARING, BALL (5206) (TOYO)		9	0	4	5	6	7	8		....	1	91008-300-008
24	BEARING, BALL (6303) (KOYO)		9	0	4	5	6	7	8		....	1	91011-MB0-003
	BEARING, BALL (6303) (TOYO)		9	0	4	5	6	7	8		....	1	91011-MB0-004
25	BEARING, SPECIAL (30X62X25.8) (TOYO)		9	0	4	5	6	7	8		....	1	91012-MG8-003
26	OIL SEAL (25X66X8.5) (ARAI)		9	0	4	5	6	7	8		....	1	91205-MG7-003
27	O-RING (69.5X2.25) (ARAI)		9	0	4	5	6	7	8		....	1	91300-MG7-003
28	O-RING (4.9X1.9)		9	0	4	5	6	7	8		....	2	91307-442-000
	O-RING (4.8X1.9) (NOK)		9	0	4	5	6	7	8		....	2	91313-MA6-005
29	O-RING (64.5X3) (ARAI)		9	0	4	5	6	7	8		....	1	91310-MG7-003
30	O-RING (69.5X3)		9	0	4	5	6	7	8		....	1	91314-MG7-003
31	PIN, DOWEL (10X20)		9	0	4	5	6	7	8		....	1	94302-10200
32	CIRCLIP (INNER) (65MM)		9	0	4	5	6	7	8		....	1	94520-65120
33	BEARING, RADIAL BALL (6304)		9	0	4	5	6	7	8		....	1	96100-63040-00
34	BOLT, SOCKET (8X22)		9	0	4	5	6	7	8		....	4	96700-08022-17

 © AMERICAN HONDA MOTOR CO. INC. 1997

CARBURETOR ASSY

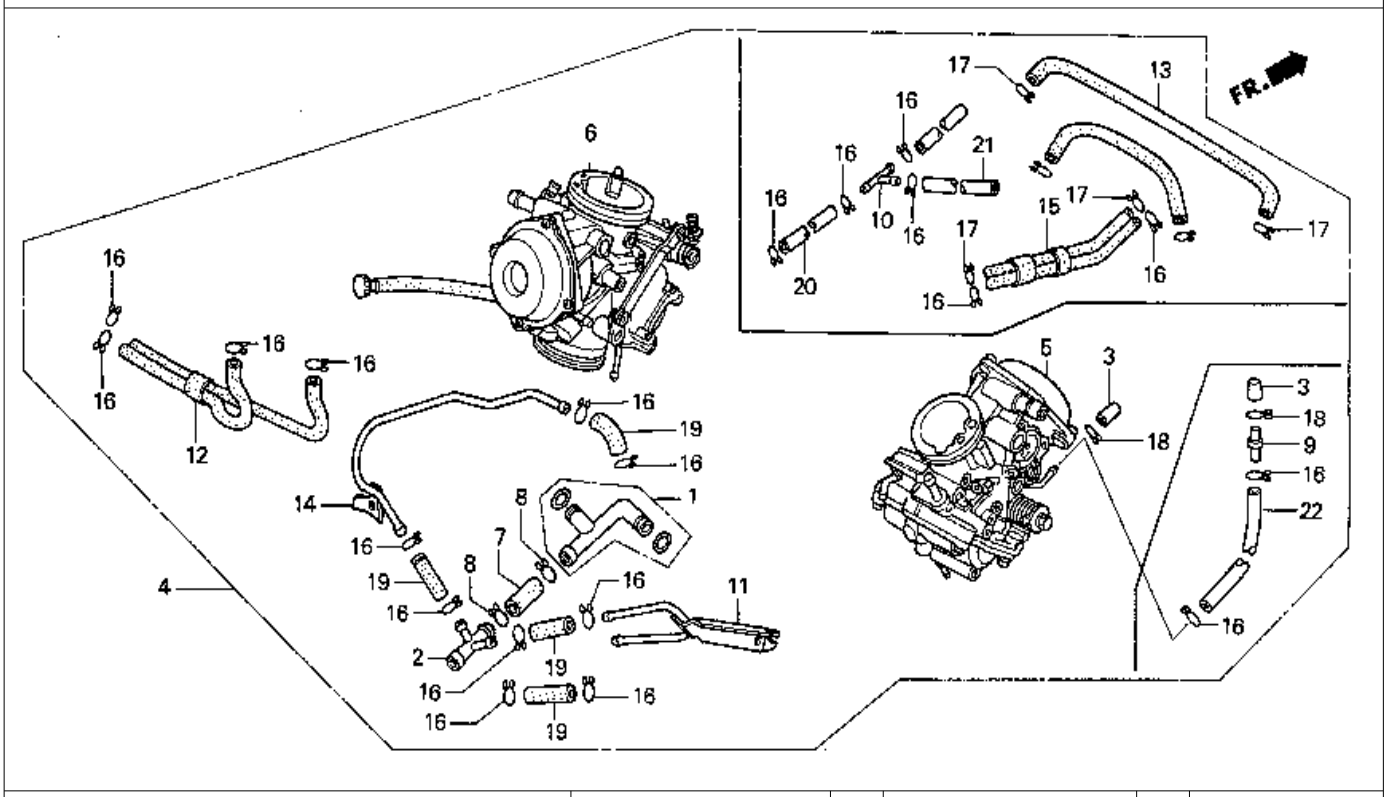

9 = PC800'89 6 = PC800'96
0 = PC800'90 7 = PC800'97
4 = PC800'94 8 = PC800'98
5 = PC800'95

Ref. No.	BLOCK NO. E-19 / DESCRIPTION	1989	1990	1994	1995	1996	1997	1998	AREA CODE	FRAME SERIAL NUMBER FROM	TO	QTY REQ	PART NUMBER
1	JOINT SET	9	0	4	5	6	7	8		.....	.....	1	16026-ME9-671
2	T-JOINT	9	0	4	5	6	7	8		.....	.....	1	16026-MR5-671
3	CAP	9	0	4	5	6	7	8		.....	.....	1	16097-ME9-671
4	CARBURETOR ASSY,	9	..	..	..	..	..	..	A	.....	.....	1	16100-MR5-674
		..	0	..	..	..	..	..	A	.....	2103169	1	16100-MR5-674
	CARBURETOR ASSY,	9	..	..	..	..	..	..	AC	.....	.....	1	16100-MR5-794
		..	0	..	..	..	..	..	AC	.....	2103166	1	16100-MR5-794
	CARBURETOR ASSY,	..	0	..	..	..	..	..	A	2103170	.....	1	16100-MR5-675
		..	..	4	5	6	7	8	A	.....	.....	1	16100-MR5-675
	CARBURETOR ASSY,	..	0	..	..	..	..	..	AC	2103167	.....	1	16100-MR5-795
		..	..	4	5	6	7	8	AC	.....	.....	1	16100-MR5-795
5	CARBURETOR ASSY., R. FR.	9	0	4	5	6	7	8	A	.....	.....	1	16101-MR5-673
	CARBURETOR ASSY., R. FR.	9	0	4	5	6	7	8	AC	.....	.....	1	16101-MR5-793
6	CARBURETOR ASSY., L. RR.	9	0	4	5	6	7	8	A	.....	.....	1	16102-MR5-673
	CARBURETOR ASSY., L. RR.	9	0	4	5	6	7	8	AC	.....	.....	1	16102-MR5-793
7	TUBE	9	0	4	5	6	7	8		.....	.....	1	16144-MR5-671
8	CLIP, TUBE	9	0	4	5	6	7	8		.....	.....	2	16163-MB3-671

 © AMERICAN HONDA MOTOR CO. INC. 1997

CARBURETOR ASSY

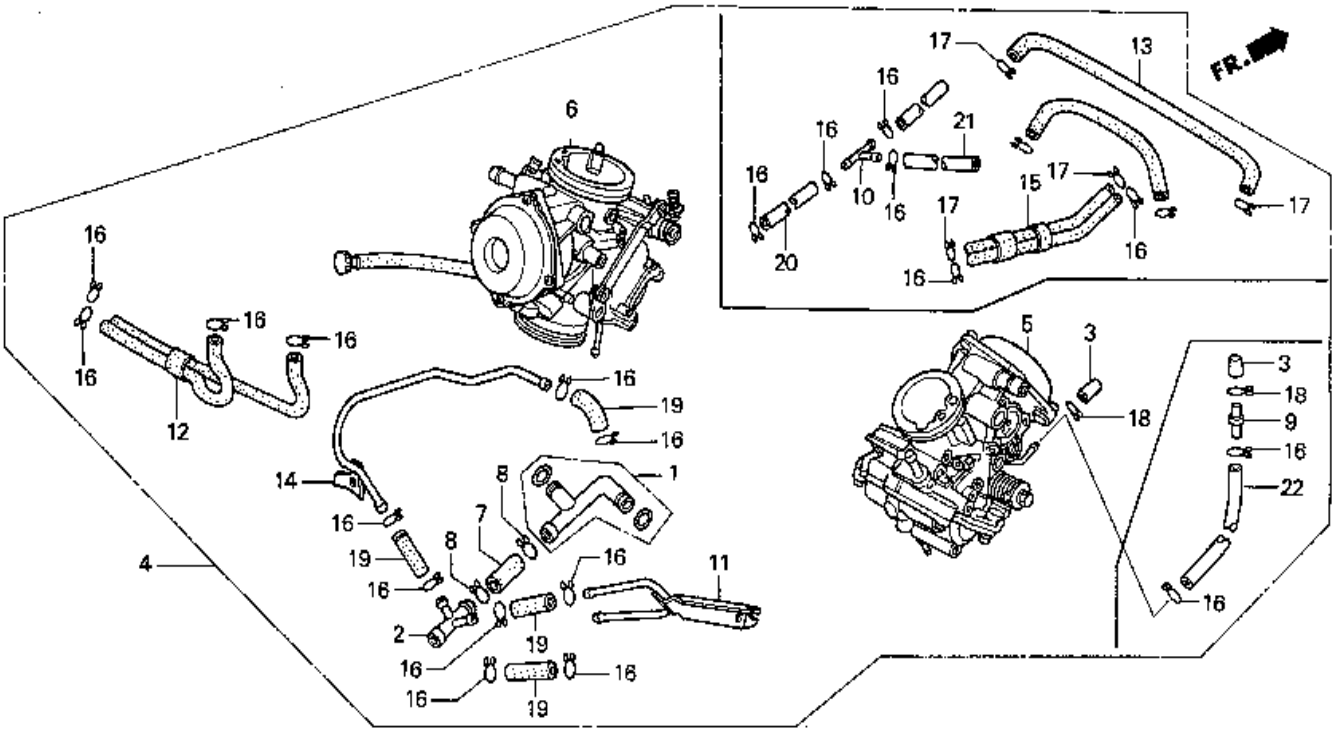

9 = PC800'89 6 = PC800'96
0 = PC800'90 7 = PC800'97
4 = PC800'94 8 = PC800'98
5 = PC800'95

Ref. No.	BLOCK NO. E-19 / DESCRIPTION	1989 / 9	1990 / 0	1994 / 4	1995 / 5	1996 / 6	1997 / 7	1998 / 8	AREA CODE / E	FRAME SERIAL NUMBER FROM	TO	QTY REQ	PART NUMBER
9	JOINT	..	0	..	..	..	..	..	A	VDGTA B	.....	1	16180-MR5-670
		..	0	..	..	..	..	..	AC	VDGUA B	.....	1	16180-MR5-670
		..	..	4	5	6	7	8		.....	.....	1	16180-MR5-670
10	JOINT, T-TYPE	9	0	4	5	6	7	8	AC	.....	.....	1	16180-195-731
11	PIPE COMP., STEEL	9	0	4	5	6	7	8		.....	.....	1	16197-MR5-671
12	TUBE COMP.	9	0	4	5	6	7	8		.....	.....	1	16198-MR5-671
13	TUBE	9	0	4	5	6	7	8	AC	.....	.....	1	16198-MR5-791
14	PIPE COMP., STEEL	9	0	4	5	6	7	8		.....	.....	1	16199-MR5-671
15	TUBE COMP.	9	0	4	5	6	7	8	AC	.....	.....	1	16199-MR5-791
16	CLIP, TUBE (B7)	9	..	..	..	..	..	..	A	.....	.....	12	95002-02070
		9	..	..	..	..	..	..	AC	.....	.....	18	95002-02070
		..	0	..	..	..	..	..	A	.....	VDGTA A	12	95002-02070
		..	0	..	..	..	..	..	A	VDGTA B	.....	14	95002-02070
		..	0	..	..	..	..	..	AC	.....	VDGUA A	18	95002-02070
		..	0	..	..	..	..	..	AC	VDGUA B	.....	20	95002-02070
		..	..	4	5	6	7	8	A	.....	.....	14	95002-02070
		..	..	4	5	6	7	8	AC	.....	.....	20	95002-02070
17	CLIP, TUBE (B10)	9	0	4	5	6	7	8	AC	.....	.....	4	95002-02100
18	CLIP, TUBE (B6.5)	9	0	4	5	6	7	8		.....	.....	1	95002-02650
19	BULK HOSE, VACUUM (3.5X8000) (3.5X40)	9	0	4	5	6	7	8		.....	.....	4	95005-35008-10M
20	BULK HOSE, VACUUM (3.5X8000) (3.5X150)	9	0	4	5	6	7	8	AC	.....	.....	1	95005-35008-10M

 © AMERICAN HONDA MOTOR CO. INC. 1997

CARBURETOR ASSY

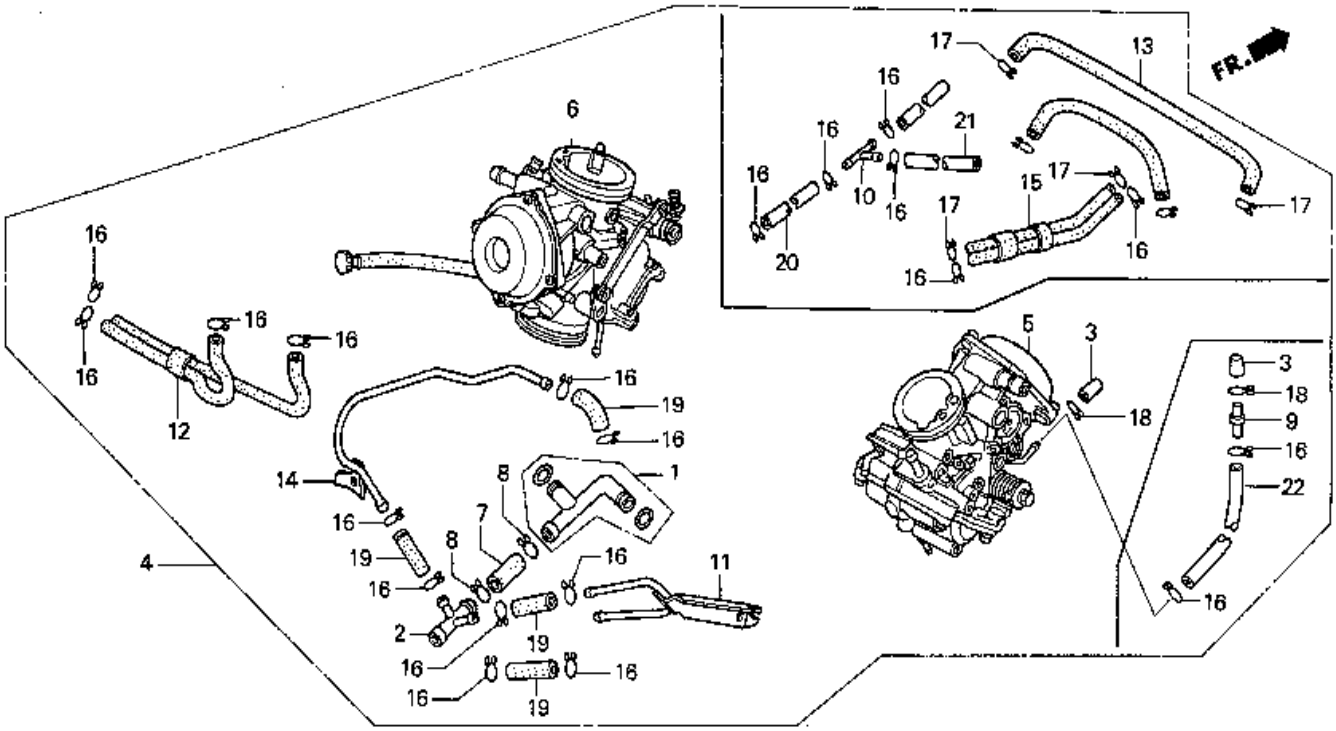

9 = PC800'89
0 = PC800'90
4 = PC800'94
5 = PC800'95
6 = PC800'96
7 = PC800'97
8 = PC800'98

Ref. No.	BLOCK NO. E-19 / DESCRIPTION	PC800 1989	1990	1994	1995	1996	1997	1998	AREA CODE	FRAME SERIAL NUMBER FROM	TO	QTY REQ	PART NUMBER
21	BULK HOSE, VACUUM (3.5X8000) (3.5X210)	..	0	..	..	..	..	..	A	VDGTA B	.....	1	95005-35008-10M
22	BULK HOSE, VACUUM (3.5X8000) (3.5X210)	..	0	..	..	..	..	..	AC	VDGUA B	.....	1	95005-35008-10M
		..	..	4	5	6	7	8		.....	.....	1	95005-35008-10M

 © AMERICAN HONDA MOTOR CO. INC. 1997 D8

THIS IS A CONTINUATION OF PAGE 41 GRID D6 NO ROOM

CARBURETOR COMPONENTS

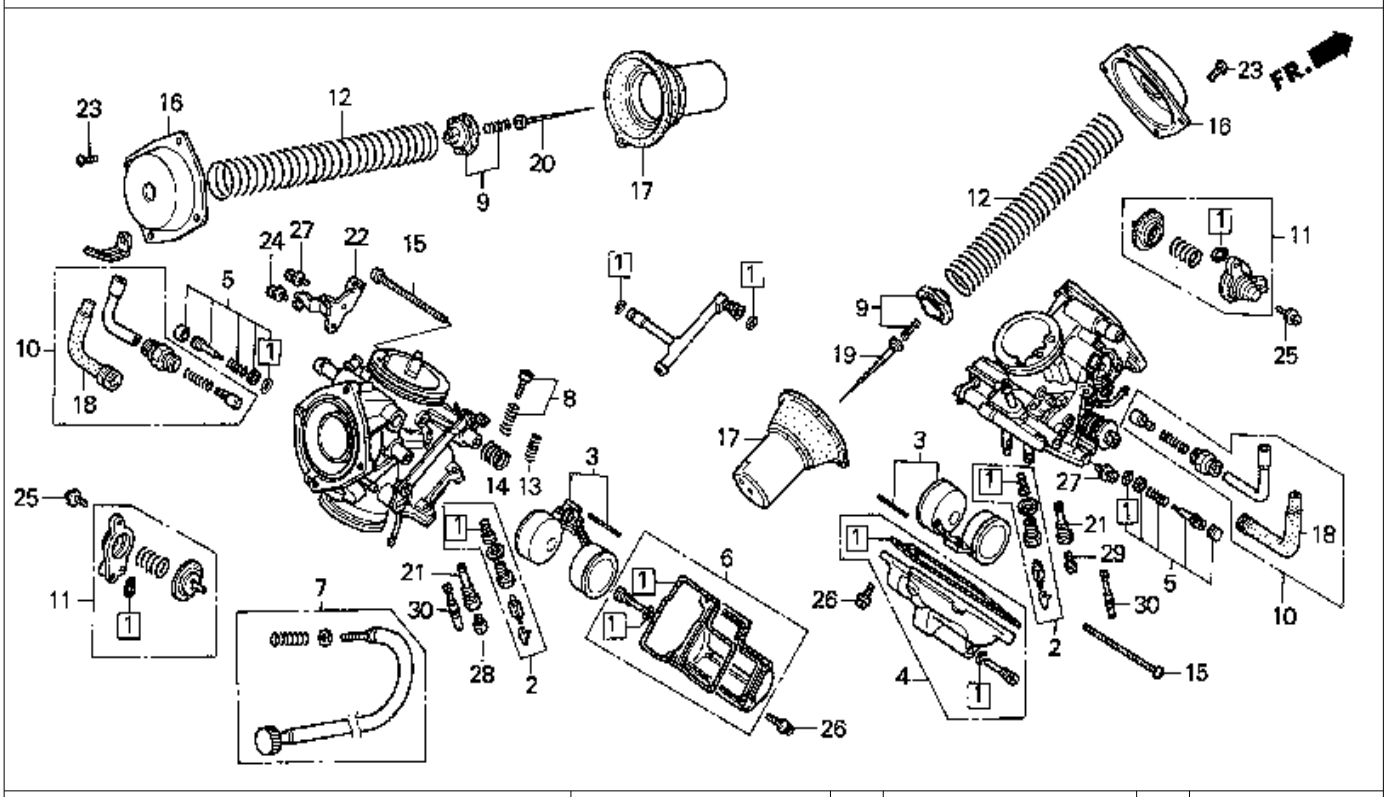

9 = PC800'89 6 = PC800'96
0 = PC800'90 7 = PC800'97
4 = PC800'94 8 = PC800'98
5 = PC800'95

Ref. No.	BLOCK NO. E-19-1 DESCRIPTION	PC800 1989 9	1990 0	1994 4	1995 5	1996 6	1997 7	1998 8	AREA CODE	FRAME SERIAL NUMBER FROM	TO	QTY REQ	PART NUMBER
1	GASKET SET	9	0	4	5	6	7	8		.....	.....	2	16010-MR5-671
2	VALVE SET, FLOAT	9	0	4	5	6	7	8		.....	.....	2	16011-MR5-672
3	FLOAT SET	9	0	4	5	6	7	8		.....	.....	2	16013-ML7-004
4	CHAMBER SET, FLOAT	9	0	4	5	6	7	8		.....	.....	1	16015-MR5-671
5	SCREW SET A	9	0	4	5	6	7	8		.....	.....	2	16016-MR5-671
6	CHAMBER SET, FLOAT	9	0	4	5	6	7	8		.....	.....	1	16023-MR5-671
7	SCREW SET B	9	0	4	5	6	7	8		.....	.....	1	16028-MR5-671
8	SCREW SET	9	0	4	5	6	7	8		.....	.....	1	16029-MN4-003
9	PLATE SET	9	0	4	5	6	7	8		.....	.....	2	16037-MN9-004
10	VALVE SET, STARTER	9	0	4	5	6	7	8		.....	.....	2	16046-MN8-004
11	VALVE SET, AIR CUT	9	0	4	5	6	7	8		.....	.....	2	16048-MR1-004
	VALVE SET, AIR CUT	9	0	4	5	6	7	8		.....	.....	2	16048-MR1-305
12	SPRING, VACUUM PISTON	9	0	4	5	6	7	8		.....	.....	2	16050-MG7-601
13	SPRING	9	0	4	5	6	7	8		.....	.....	1	16052-ME9-672
14	SPRING	9	0	4	5	6	7	8		.....	.....	1	16053-ME9-672
	SPRING	9	0	4	5	6	7	8		.....	.....	1	16053-MG7-601

 © AMERICAN HONDA MOTOR CO. INC. 1997

CARBURETOR COMPONENTS

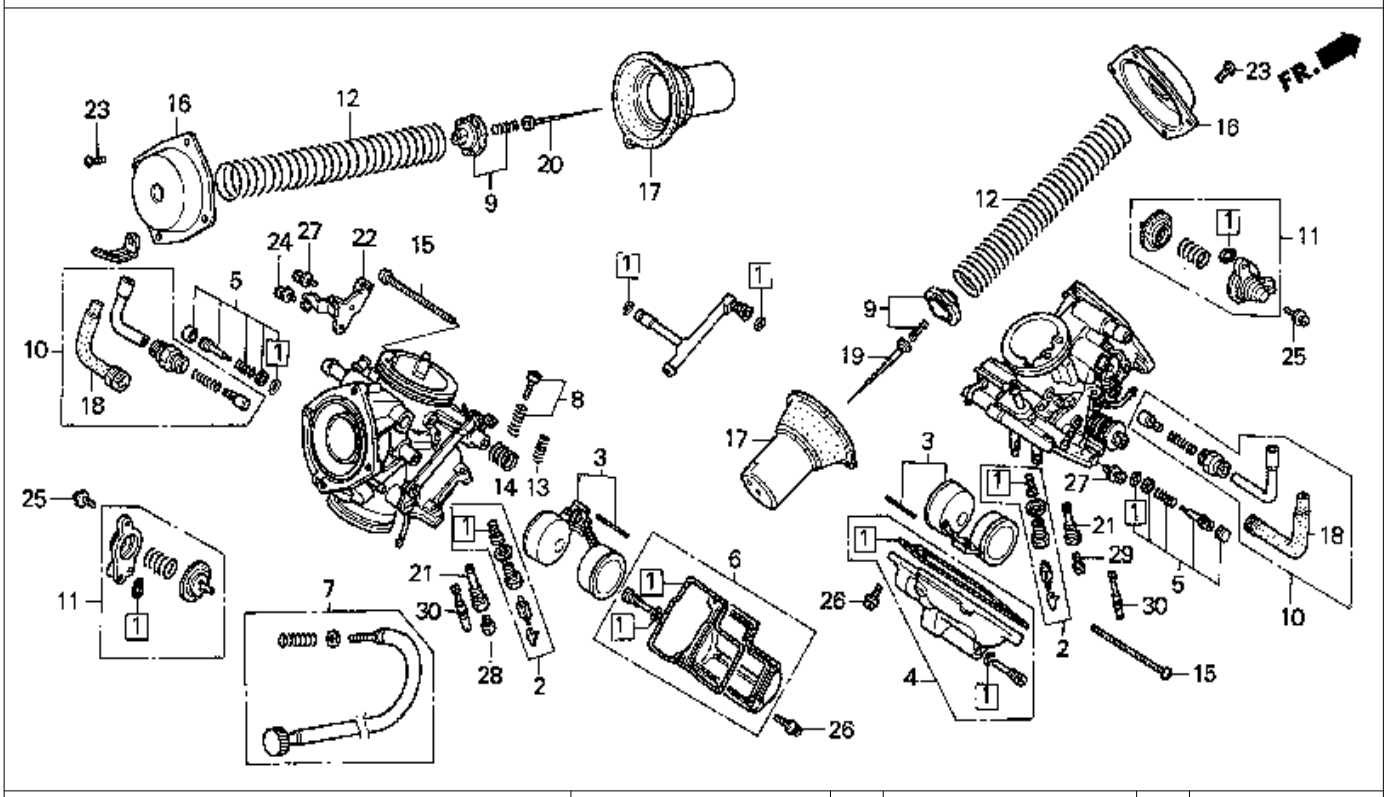

9 = PC800'89	6 = PC800'96								A				
0 = PC800'90	7 = PC800'97			PC800					R				
4 = PC800'94	8 = PC800'98								E			Q	
5 = PC800'95									A			T	
			1	1	1	1	1	1	1			Y	
			9	9	9	9	9	9	9	C			
			8	9	9	9	9	9	9	O	FRAME	R	
Ref.	BLOCK NO.	E-19-1	9	0	4	5	6	7	8	D	SERIAL NUMBER	E	
No.	DESCRIPTION		9	0	4	5	6	7	8	E	FROM TO	Q	PART NUMBER
15	SCREW, PAN		9	0	4	5	6	7	8		....	2	16082-ME9-671
16	TOP COMP.		9	0	4	5	6	7	8		....	2	16107-MM8-004
17	PISTON COMP., VACUUM		9	0	4	5	6	7	8		....	2	16111-MR5-673
18	CAP, CABLE SEALING		9	0	4	5	6	7	8		....	2	16118-ME9-671
19	NEEDLE COMP., FR. JET		9	0	4	5	6	7	8		....	1	16131-MR5-671
20	NEEDLE COMP., RR. JET		9	0	4	5	6	7	8		....	1	16151-MR5-791
21	HOLDER, NEEDLE JET		9	0	4	5	6	7	8	AC	....	2	16165-ME9-671
	HOLDER, NEEDLE JET		9	0	4	5	6	7	8	A	....	2	16165-MR5-671
22	STAY COMP., WIRE		9	0	4	5	6	7	8		....	1	16169-MR5-671
23	SCREW, PAN (4X10)		9	0	4	5	6	7	8		....	8	93500-04010-0A
24	SCREW-WASHER (4X8)		9	0	4	5	6	7	8		....	1	93892-04008-00
25	SCREW-WASHER (4X12)		9	0	4	5	6	7	8		....	4	93892-04012-00
26	SCREW-WASHER (4X16)		9	0	4	5	6	7	8		....	8	93892-04016-00
27	SCREW-WASHER (5X12)		9	0	4	5	6	7	8		....	2	93892-05012-00
28	JET, MAIN (#122)		9	0	4	5	6	7	8		....	1	99101-393-1220
29	JET, MAIN (#125)		9	0	4	5	6	7	8		....	1	99101-GHB-1250
	JET, MAIN (#125)		9	0	4	5	6	7	8		....	1	99101-393-1250
30	JET, SLOW (#38)		9	0	4	5	6	7	8		....	2	99103-MT2-0380

 © AMERICAN HONDA MOTOR CO. INC. 1997

GASKET KIT A

NO DRAWING

9 = PC800'89 6 = PC800'96
0 = PC800'90 7 = PC800'97
4 = PC800'94 8 = PC800'98
5 = PC800'95

Ref. No.	BLOCK NO. EOP-1 DESCRIPTION	PC800 1989	1990	1994	1995	1996	1997	1998	AREA CODE	FRAME SERIAL NUMBER FROM	TO	QTY REQ	PART NUMBER
	GASKET KIT A	9	..	..	..	..	..	..		.....	.....	1	061A1-MR5-405
	GASKET KIT A	9	..	..	..	..	..	..		.....	.....	1	061A1-MR5-670
	GASKET KIT A	..	0	..	..	..	..	..		.....	.....	1	061A1-MR5-671
	GASKET KIT A	..	..	4	5	6	7	8		.....	.....	1	06111-MR5-671
1	GASKET, CYLINDER	9	0	4	5	6	7	8		.....	.....	2	12191-MK7-671
2	SEAL, VALVE STEM (ARAI)	9	0	4	5	6	7	8		.....	.....	2	12209-413-003
3	SEAL, VALVE STEM (ARAI)	9	0	4	5	6	7	8		.....	.....	4	12212-MR5-671
4	GASKET, CYLINDER HEAD	9	0	4	5	6	7	8		.....	.....	2	12251-MR5-670
5	PLUG, CAMSHAFT	..	..	4	5	6	7	8		.....	.....	4	12312-ME9-750
6	GASKET, EX. PIPE	9	0	..	..	..	..	..		.....	.....	2	18291-ME9-000
	GASKET, EX. PIPE	9	0	..	..	..	..	..		.....	.....	2	18291-ME9-306
	GASKET, EX. PIPE	9	0	..	..	..	..	..		.....	.....	2	18291-MM8-880
	GASKET, EX. PIPE	..	..	4	5	6	7	8		.....	.....	2	18291-MR5-801
7	WASHER, SEALING (7MM)	9	0	4	5	6	7	8		.....	.....	4	90441-MC0-000
8	WASHER, SEALING (6MM)	9	0	4	5	6	7	8		.....	.....	4	90441-706-000
9	WASHER, OIL BOLT	9	0	4	5	6	7	8		.....	.....	2	90545-300-000

 © AMERICAN HONDA MOTOR CO. INC. 1997

GASKET KIT A

NO DRAWING

9 = PC800'89
0 = PC800'90
4 = PC800'94
5 = PC800'95
6 = PC800'96
7 = PC800'97
8 = PC800'98

Ref. No.	BLOCK NO. EOP-1 DESCRIPTION	PC800 1989	1990	1994	1995	1996	1997	1998	AREA CODE	FRAME SERIAL NUMBER FROM		TO	QTY REQ	PART NUMBER
10	O-RING (13.8X1.9)	9	0	4	5	6	7	8		.....		.....	6	91301-KJ9-000
	O-RING (13.8X1.9)	9	0	4	5	6	7	8		.....		.....	6	91301-PC0-003
11	O-RING (27.4X2.4)	9	0	4	5	6	7	8		.....		.....	2	91304-MG7-003
12	O-RING (21.6X2)	9	0	4	5	6	7	8		.....		.....	6	91310-MB0-003
13	O-RING (35.3X2.4) (NOK)	9	0	4	5	6	7	8		.....		.....	3	91351-MG7-004

 © AMERICAN HONDA MOTOR CO. INC. 1997

GASKET KIT B

NO DRAWING

9 = PC800'89 6 = PC800'96
0 = PC800'90 7 = PC800'97
4 = PC800'94 8 = PC800'98
5 = PC800'95

Ref. No.	BLOCK NO. EOP-2 / DESCRIPTION	PC800 1989	1990	1994	1995	1996	1997	1998	AREA CODE	FRAME SERIAL NUMBER FROM	TO	QTY REQ	PART NUMBER
	GASKET B KIT	9	0	..	..	..	..	..		.....	.....	1	061B1-MR5-670
	GASKET B KIT	..	..	4	5	6	7	8		.....	.....	1	06112-MR5-670
1	GASKET , R. CRANKCASE COVER	9	0	..	..	..	..	..		.....	.....	1	11394-MK7-306
	GASKET , R. CRANKCASE COVER	9	0	..	..	..	..	..		.....	.....	1	11394-MK7-670
	GASKET , R. CRANKCASE COVER	9	0	4	5	6	7	8		.....	.....	1	11394-MR5-801
2	GASKET , L. CRANKCASE COVER	9	0	..	..	..	..	..		.....	.....	1	11395-MR5-306
	GASKET , L. CRANKCASE COVER	9	0	..	..	..	..	..		.....	.....	1	11395-MR5-670
	GASKET , L. CRANKCASE COVER	9	0	4	5	6	7	8		.....	.....	1	11395-MR5-800
3	GASKET, OIL STRAINER	9	0	4	5	6	7	8		.....	.....	1	15154-425-000
4	GASKET, WATER PUMP COVER	9	0	4	5	6	7	8		.....	.....	1	19226-ME9-000
5	WASHER, SEALING (6MM)	9	0	4	5	6	7	8		.....	.....	1	90441-706-000
6	O-RING (69.5X2.25) (ARAI)	9	0	4	5	6	7	8		.....	.....	1	91300-MG7-003
7	O-RING (48.1X3.6) (ARAI)	9	0	4	5	6	7	8		.....	.....	1	91301-ML7-003
8	O-RING (22X3.0)	9	0	4	5	6	7	8		.....	.....	1	91301-250-000
	O-RING (22X3.0)	9	0	4	5	6	7	8		.....	.....	1	91307-425-003
9	O-RING (32.95X2.62) (ARAI)	9	0	4	5	6	7	8		.....	.....	1	91302-MB0-013

 © AMERICAN HONDA MOTOR CO. INC. 1997

GASKET KIT B

NO DRAWING

9 = PC800'89
0 = PC800'90
4 = PC800'94
5 = PC800'95
6 = PC800'96
7 = PC800'97
8 = PC800'98

Ref. No.	BLOCK NO. EOP-2 / DESCRIPTION	PC800 1989	1990	1994	1995	1996	1997	1998	AREA CODE	FRAME SERIAL NUMBER FROM	TO	QTY REQ	PART NUMBER
10	O-RING (14.8X2.4)	9	0	4	5	6	7	8		.....	.....	2	91303-KFO-003
	O-RING (14.8X2.4) (NOK)	9	0	4	5	6	7	8		.....	.....	2	91356-MA6-005
11	O-RING (5X1.7) (ARAI)	9	0	4	5	6	7	8		.....	.....	2	91305-MG7-003
12	O-RING (4.9X1.3)	9	0	4	5	6	7	8		.....	.....	2	91307-422-000
	O-RING (4.9X1.3) (NOK)	9	0	4	5	6	7	8		.....	.....	2	91313-MA6-005
13	O-RING (14.6X3.7) (ARAI)	9	0	4	5	6	7	8		.....	.....	2	91309-MB0-003
14	O-RING (24.4X3.1) (ARAI)	9	0	4	5	6	7	8		.....	.....	1	91309-425-003
	O-RING (24.4X3.1)	9	0	4	5	6	7	8		.....	.....	1	91312-MG7-003
15	O-RING (64.5X3) (ARAI)	..	..	4	5	6	7	8		.....	.....	1	91310-MG7-003
16	O-RING (18.5X2.4) (ARAI)	9	0	4	5	6	7	8		.....	.....	1	91311-MB0-003
17	O-RING (69.5X3)	..	..	4	5	6	7	8		.....	.....	1	91314-MG7-003
18	SEAL, WATER PIPE (NOK)	9	0	..	..	..	..	..		.....	.....	2	91315-ME9-004
	SEAL, WATER PIPE (ARAI)	9	0	4	5	6	7	8		.....	.....	2	91315-ME9-003
19	O-RING (35.3X2.4) (NOK)	9	0	4	5	6	7	8		.....	.....	1	91351-MG7-004
20	O-RING	9	0	4	5	6	7	8		.....	.....	2	91356-169-003
21	WASHER, DRAIN PLUG (14MM)	9	0	4	5	6	7	8		.....	.....	1	94109-14000

 © AMERICAN HONDA MOTOR CO. INC. 1997

HEADLIGHT

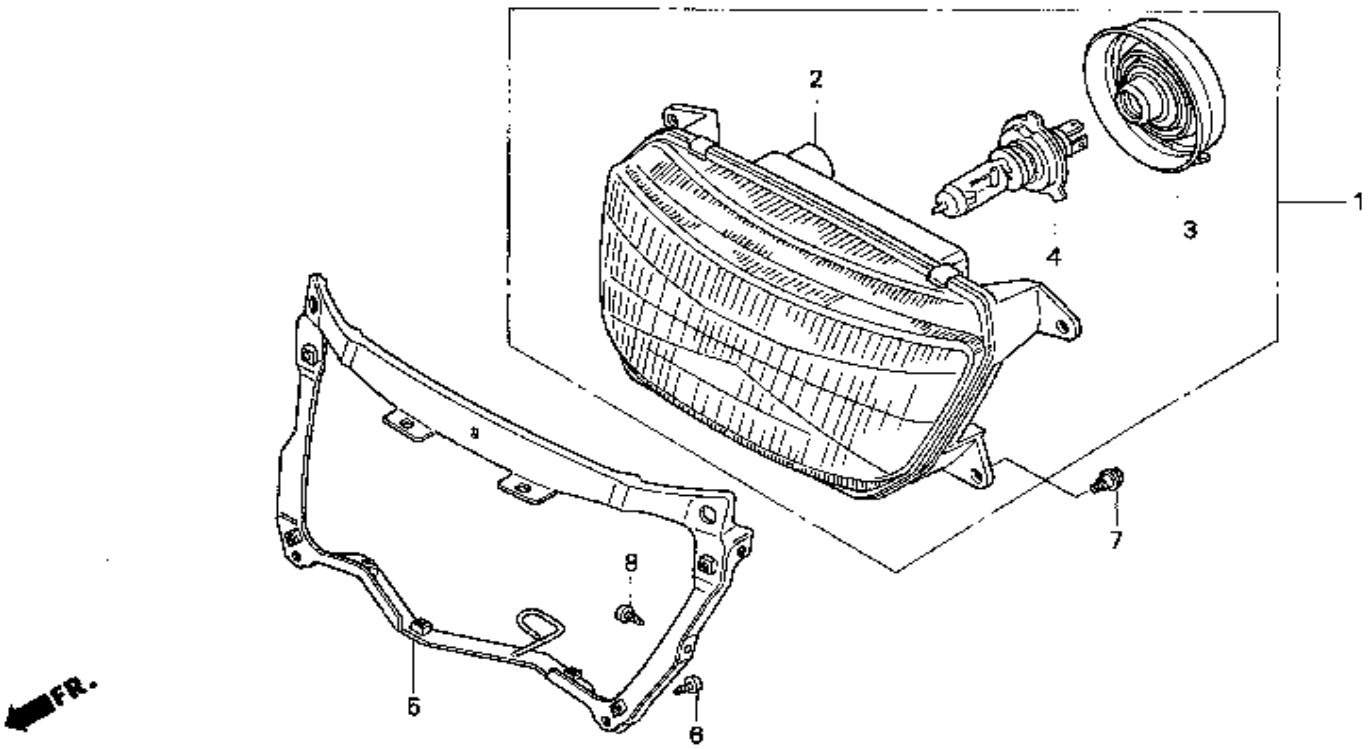

9 = PC800'89 6 = PC800'96
0 = PC800'90 7 = PC800'97
4 = PC800'94 8 = PC800'98
5 = PC800'95

Ref. No.	BLOCK NO. F-1 / DESCRIPTION	1989	1990	1994	1995	1996	1997	1998	AREA CODE	FRAME SERIAL FROM		FRAME NUMBER TO	QTY REQ	PART NUMBER
		PC800												
1	HEADLIGHT ASSY. (12V 60/55W)	9	0	..	..	..	..	..		.....		.....	1	33100-MR5-671
	HEADLIGHT ASSY. (12V 60/55W)	9	0	..	..	..	..	..		.....		.....	1	33100-MR5-672
2	HEADLIGHT UNIT	9	0	4	5	6	7	8		.....		.....	1	33102-MR5-671
3	COVER, RUBBER	9	0	4	5	6	7	8		.....		.....	1	33112-MM5-601
4	BULB, HEADLIGHT (H4 JA12V60/55W)	9	0	4	5	6	7	8		.....		.....	1	34901-MC7-601
	BULB (12V/55W) (H4)	9	0	4	5	6	7	8		.....		.....	1	34901-MC7-601AH
5	STAY, HEADLIGHT SETTING	9	0	..	..	..	7	8		.....		.....	1	64213-MR5-000
	STAY, HEADLIGHT SETTING	..	..	4	5	6	..	..		.....		.....	1	64213-MR5-620
6	SCREW, TAPPING (4X12)	9	0	4	5	6	7	8		.....		.....	2	90101-SA4-000
	SCREW, TAPPING (4X16)	9	0	4	5	6	7	8		.....		.....	2	93913-14280
7	SCREW, PAN (5X16)	9	0	4	5	6	7	8		.....		.....	4	90102-GB2-720
8	SCREW, TAPPING (4X12)	9	..	..	..	..	..	8		.....		.....	4	90101-SA4-000
	SCREW, TAPPING (4X16)	9	..	..	..	..	..	8		.....		.....	4	93913-14280
	SCREW, PAN (4X8)	..	0	..	..	..	..	..	A	LM100136		.....	4	93500-04008-0A
		..	..	4	5	6	7	8		.....		.....	4	93500-04008-0A
	SCREW, PAN (4X12)	..	0	..	..	..	..	..	A	.....		LM100135	4	93500-04012-0A
		..	0	..	..	..	..	..	AC	.....		.....	4	93500-04012-0A

48/49 © AMERICAN HONDA MOTOR CO. INC. 1997 E1

PAGE 48/49 INCLUDED IN THIS GRID

METER PANEL

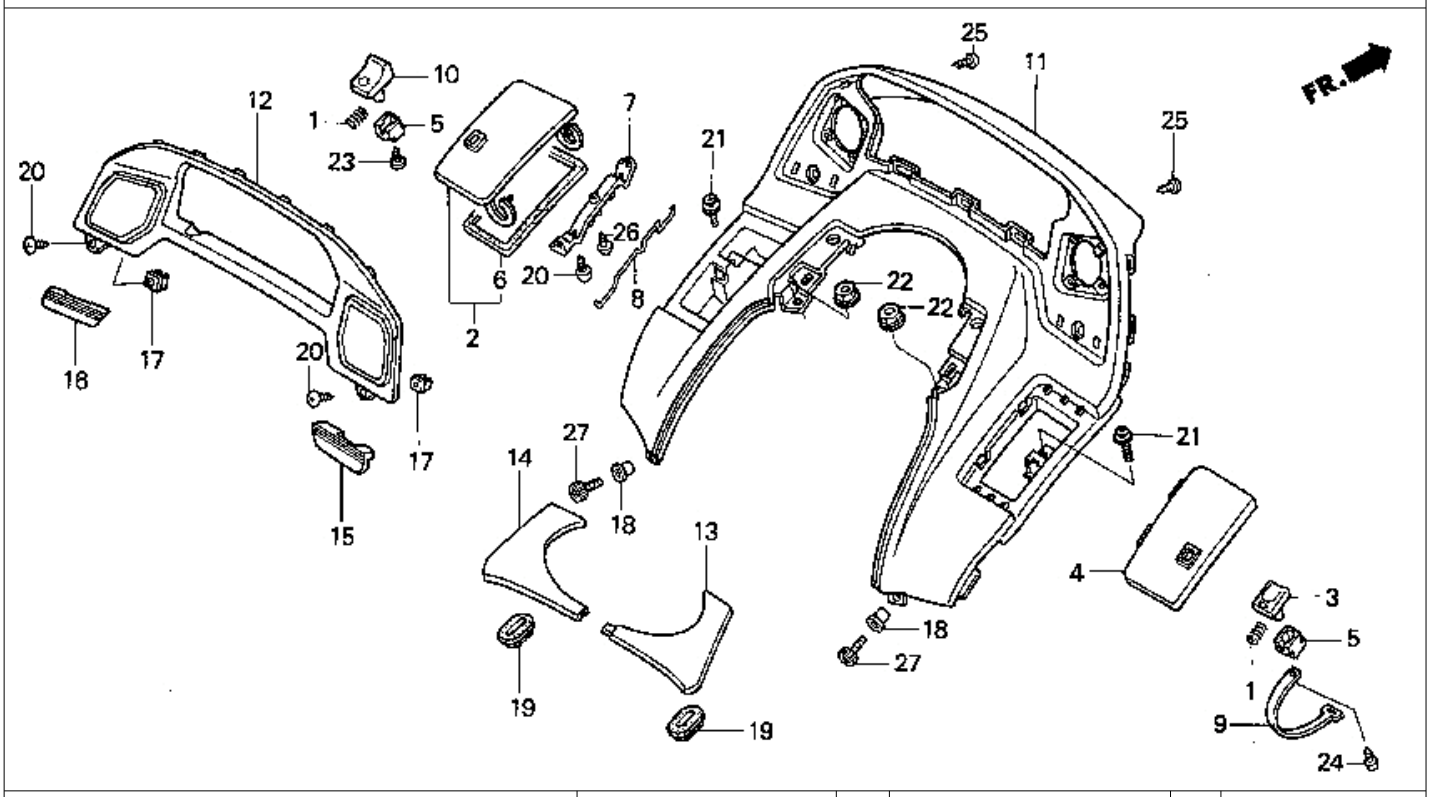

9 = PC800'89 6 = PC800'96
0 = PC800'90 7 = PC800'97
4 = PC800'94 8 = PC800'98
5 = PC800'95

Ref. No.	BLOCK NO. F-2 / DESCRIPTION	PC800 1989	1990	1994	1995	1996	1997	1998	AREA CODE	FRAME SERIAL NUMBER FROM	TO	QTY REQ	PART NUMBER
1	SPRING, PAWL PLUNGER	9	..	..	..	..	..	..		.....	.....	2	24329-360-000
	SPRING, KNOB	..	0	..	..	..	..	..		.....	.....	2	64325-MR5-870
	SPRING, KNOB		0	4	5	6	7	8		.....	.....	2	64325-MR5-870
2	COVER COMP., L. POCKET *NH252*												
	(ATLANTIC GRAY)	9	..	..	..	..	..	..		.....	.....	1	64223-MR5-000ZA
	COVER COMP., L. POCKET *NH252*												
	(ATLANTIC GRAY)	..	0	4	5	..	..	..		.....	.....	1	64223-MR5-000ZA
	COVER COMP., L. POCKET *NH105*												
	(MAT BLACK)	..	..	..	..	6	..	..		.....	.....	1	64223-MR5-000ZB
	COVER COMP., L. POCKET *NH1*												
	(BLACK)	..	..	..	..	..	7	8		.....	.....	1	64223-MR5-A30ZA
3	KNOB, R. POCKET COVER	9	..	..	..	..	..	..		.....	.....	1	64224-MR5-000
	KNOB, R. POCKET COVER	9	0	4	5	..	..	..		.....	.....	1	64224-MR5-010
	KNOB, R. POCKET COVER	..	0	..	..	..	..	..		.....	.....	1	64224-MR5-870
	KNOB, R. POCKET COVER *NH1*												
	(BLACK)	..	..	..	..	6	7	8		.....	.....	1	64224-MR5-A20ZA
4	COVER, R. POCKET	9	..	..	..	..	..	..		.....	.....	1	64225-MR5-000

 © AMERICAN HONDA MOTOR CO. INC. 1997

METER PANEL

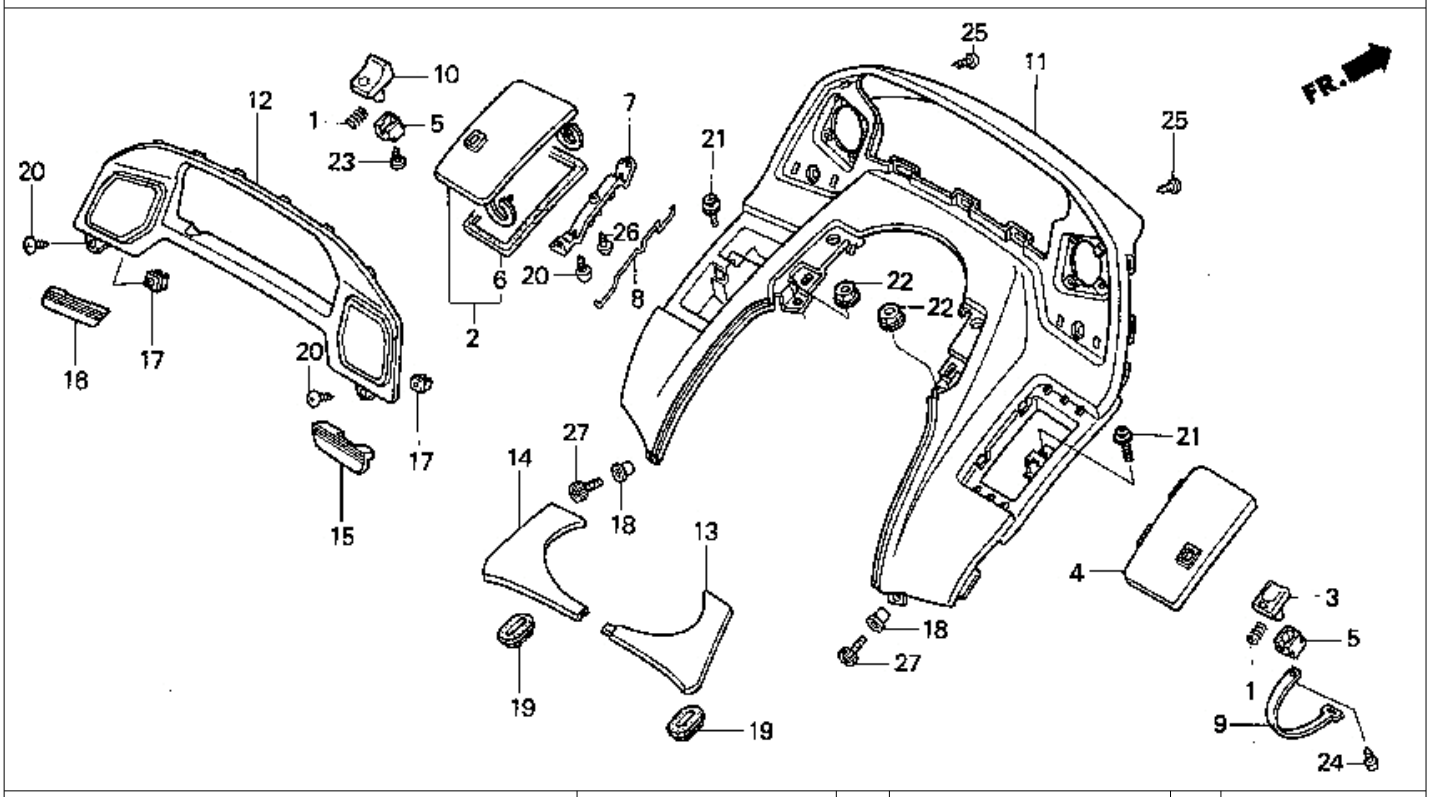

9 = PC800'89 6 = PC800'96
0 = PC800'90 7 = PC800'97
4 = PC800'94 8 = PC800'98
5 = PC800'95

Ref. No.	BLOCK NO. F-2 / DESCRIPTION	1998 99	1990	1994	1995	1996	1997	1998	AREA CODE	FRAME SERIAL FROM	FRAME NUMBER TO	QTY REQ	PART NUMBER
4	COVER, R. POCKET	9	0	..	..	..	..	..		.....	.....	1	64225-MR5-870
	COVER, R. POCKET	9	0	4	5	6	..	..		.....	.....	1	64225-MR5-010
	COVER, R. POCKET *NH1* (BLACK)	..	..	..	..	..	7	8		.....	.....	1	64225-MR5-A30ZA
5	LOCK, POCKET COVER	9	..	..	..	..	..	..		.....	.....	2	64227-MR5-000
	LOCK, POCKET COVER	9	0	4	5	6	7	8		.....	.....	2	64227-MR5-010
6	SEAL, POCKET COVER	9	0	4	5	6	7	8		.....	.....	1	64228-MR5-300
7	PLATE, POCKET COVER HINGE	9	0	4	5	6	7	8		.....	.....	1	64229-MR5-000
8	SPRING, L. COVER POCKET	9	..	..	..	..	..	..		.....	.....	1	64231-MR5-000
	SPRING, L. COVER POCKET	..	0	4	5	6	7	8		.....	.....	1	64231-MR5-870
9	BAND, STRAP	..	0	4	5	6	7	8		.....	.....	1	64232-MR5-870
10	KNOB, L. POCKET COVER	9	0	4	5	..	..	..		.....	.....	1	64234-MR5-000
	KNOB, L. POCKET COVER *NH1* (BLACK)	..	..	..	..	6	7	8		.....	.....	1	64234-MR5-A20ZA
11	VISOR, METER *NH252* (ATLANTIC GRAY)	9	0	..	..	..	..	..		.....	.....	1	64240-MR5-000ZA
	PANEL, METER *NH252* (ATLANTIC GRAY)	9	0	..	..	..	..	..		.....	.....	1	64240-MR5-010ZA
	VISOR, METER *NH252* (ATLANTIC GRAY)	..	..	4	5	..	..	..		.....	.....	1	64240-MR5-830ZA
	VISOR, METER *NH105* (MAT BLACK)	..	..	..	..	6	..	..		.....	.....	1	64240-MR5-830ZB
	VISOR, METER *NH1* (BLACK)	..	..	..	..	..	7	8		.....	.....	1	64240-MR5-A30ZA
12	PANEL, METER *NH105* (MAT BLACK)	9	0	..	..	..	..	..		.....	.....	1	64245-MR5-000ZA
	PANEL, METER *NH105* (MAT BLACK)	..	..	4	5	6	..	..		.....	.....	1	64245-MR5-800ZA
	PANEL, METER *NH1* (BLACK)	..	..	..	..	..	7	8		.....	.....	1	64245-MR5-A30ZA
13	PANEL, R. CENTER *NH252* (ATLANTIC GRAY)	9	0	4	5	..	..	..		.....	.....	1	64246-MR5-000ZA
	PANEL, R. CENTER *NH105* (MAT BLACK)	..	..	..	..	6	..	..		.....	.....	1	64246-MR5-000ZB
	PANEL, R. CENTER *NH1* (BLACK)	..	..	..	..	..	7	8		.....	.....	1	64246-MR5-A30ZA

 © AMERICAN HONDA MOTOR CO. INC. 1997

METER PANEL

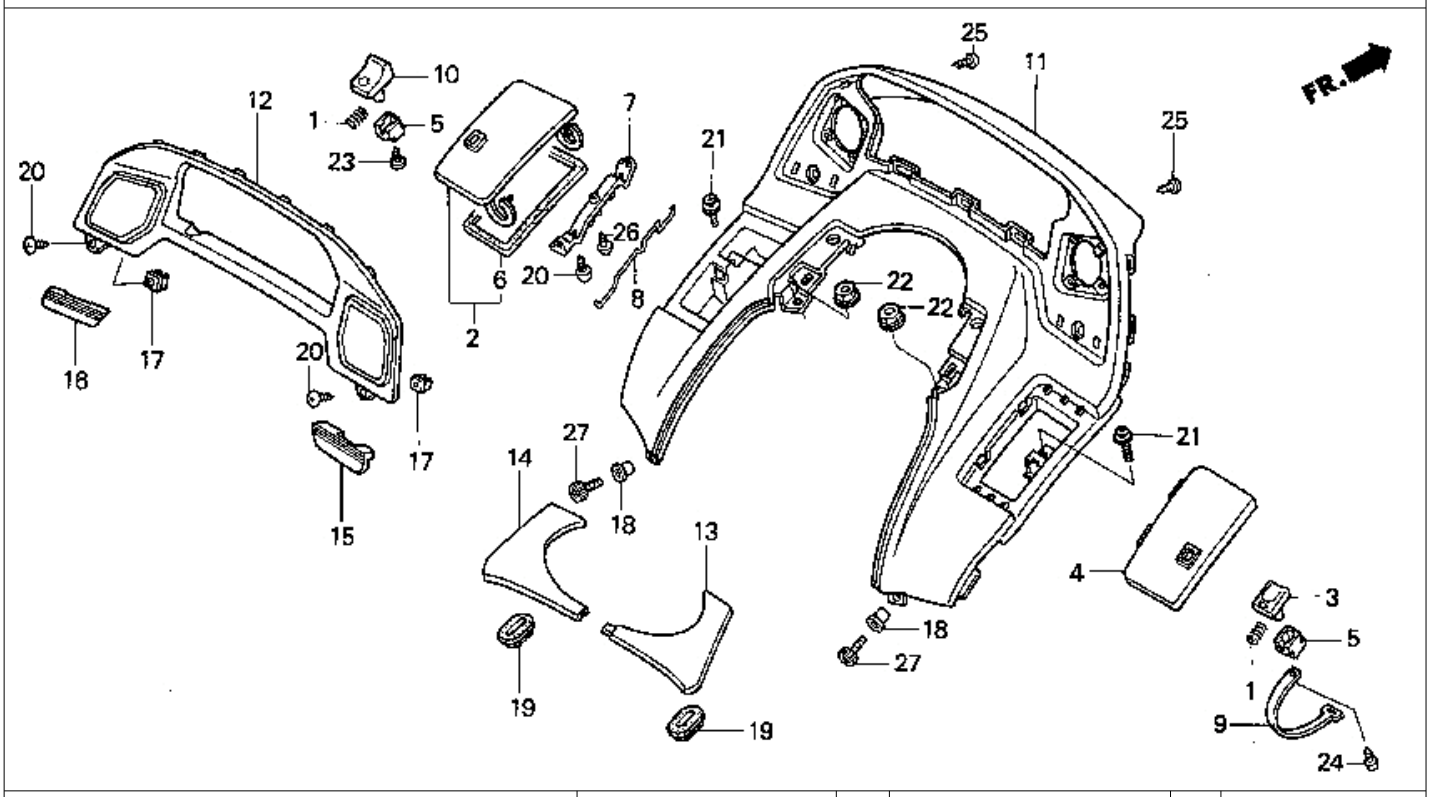

9 = PC800'89 6 = PC800'96
0 = PC800'90 7 = PC800'97
4 = PC800'94 8 = PC800'98
5 = PC800'95

Ref. No.	BLOCK NO. F-2 / DESCRIPTION	1998 99	1990	1994	1995	1996	1997	1998	AREA CODE	FRAME SERIAL FROM	FRAME NUMBER TO	QTY REQ	PART NUMBER
14	PANEL, L. CENTER *NH252* (ATLANTIC GRAY)	9	0	4	5	..	..	..		.....	.....	1	64247-MR5-000ZA
	PANEL, L. CENTER *NH105* (MAT BLACK)	..	..	..	..	6	..	..		.....	.....	1	64247-MR5-000ZB
	PANEL, L. CENTER *NH1* (BLACK)	..	..	..	..	..	7	8		.....	.....	1	64247-MR5-A30ZA
15	LID, R. METER PANEL *NH105* (MAT BLACK)	9	0	4	5	6	..	..		.....	.....	1	64248-MR5-000ZA
	LID, R. METER PANEL *NH1* (BLACK)	..	..	..	..	..	7	8		.....	.....	1	64248-MR5-A30ZA
16	LID, L. METER PANEL *NH105* (MAT BLACK)	9	0	4	5	6	..	..		.....	.....	1	64249-MR5-000ZA
	LID, L. METER PANEL *NH1* (BLACK)	..	..	..	..	..	7	8		.....	.....	1	64249-MR5-A30ZA
17	GROMMET, SCREW (4MM)	9	0	4	5	6	7	8		.....	.....	2	75522-634-000
18	COLLAR, AIR CLEANER	9	0	4	5	6	7	8		.....	.....	2	80109-KG7-000
19	GROMMET, AIR CLEANER HOUSING	9	0	4	5	6	7	8		.....	.....	2	83551-GE2-000
20	SCREW, TAPPING (4X12)	9	0	4	5	6	7	8		.....	.....	4	90101-SA4-000
	SCREW, TAPPING (4X16)	9	0	4	5	6	7	8		.....	.....	4	93913-14280
21	SCREW, SPECIAL (5X12)	9	0	4	5	6	7	8		.....	.....	2	90105-MB0-000
22	NUT, FLANGE (6MM)	9	0	..	..	..	..	..		.....	.....	2	90302-187-000
	NUT, FLANGE (6MM)	..	..	4	5	6	7	8		.....	.....	2	90301-634-670
23	SCREW, TAPPING (4X12)	9	0	4	5	6	7	8		.....	.....	1	93901-24380

 © AMERICAN HONDA MOTOR CO. INC. 1997

METER PANEL

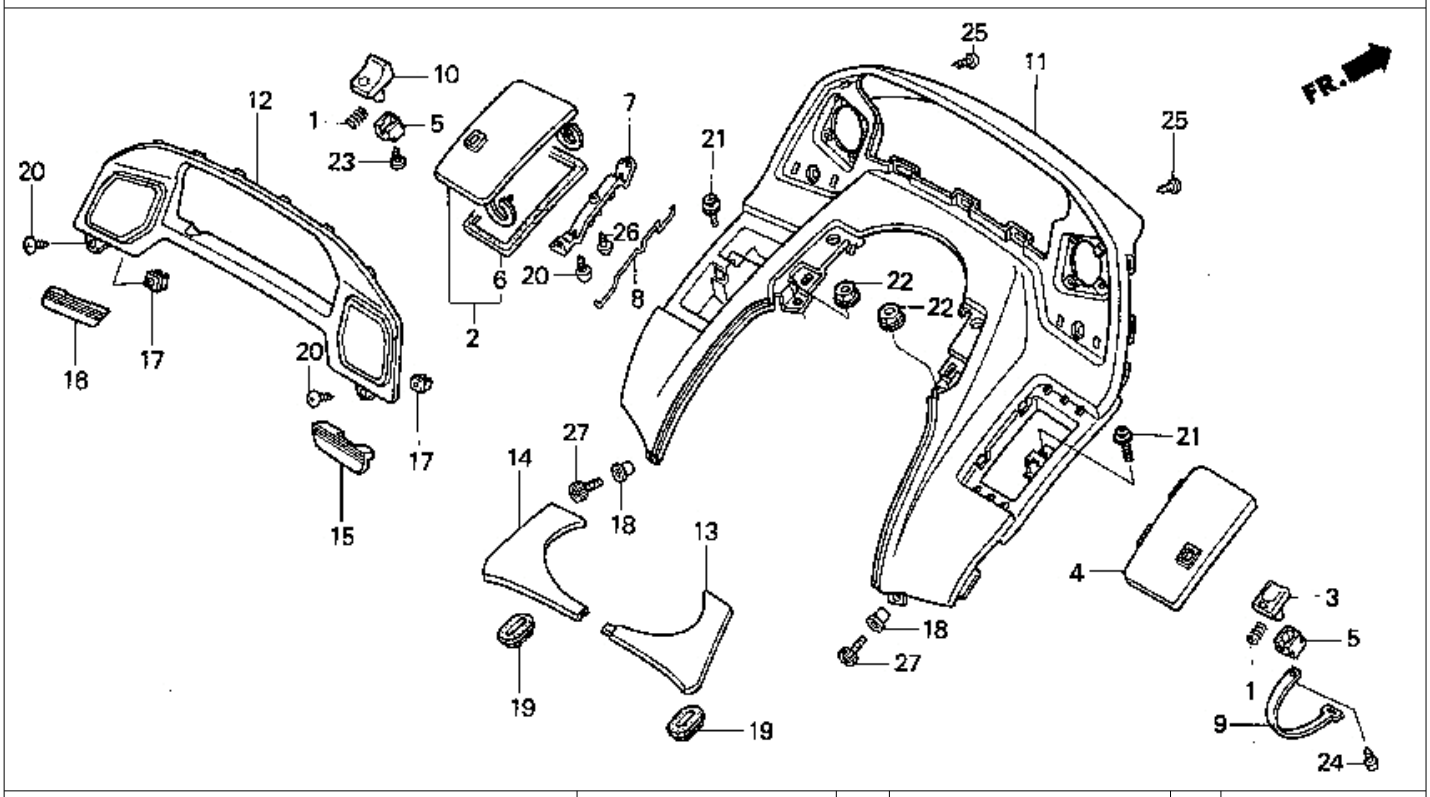

9 = PC800'89 6 = PC800'96
0 = PC800'90 7 = PC800'97
4 = PC800'94 8 = PC800'98
5 = PC800'95

Ref. No.	BLOCK NO. F-2 / DESCRIPTION	1998 99	1990	1994	1995	1996	1997	1998	AREA CODE	FRAME SERIAL FROM	FRAME NUMBER TO	QTY REQ	PART NUMBER
24	SCREW, TAPPING (4X12)	9	..	..	..	..	..	8		.....	.....	1	93901-24380
	SCREW, TAPPING (4X12)	..	0	..	..	..	..	..		.....	.....	1	90101-SA4-000
	SCREW, TAPPING (4X16)	..	0	..	..	..	..	..		.....	.....	1	93913-14280
	SCREW, TAPPING (4X12) (PO)	..	..	4	5	6	7	8		.....	.....	1	90124-SM4-000
25	SCREW, TAPPING (4X12)	9	0	4	5	6	7	8		.....	.....	2	93902-24320
26	SCREW, TAPPING (4X12)	9	0	..	..	..	..	..		.....	.....	1	90101-SA4-000
	SCREW, TAPPING (4X16)	9	0	..	..	..	..	..		.....	.....	1	93913-14280
	SCREW, TAPPING (4X10)	..	..	4	5	6	7	8		.....	.....	1	93913-14180
27	BOLT, SPECIAL (6X16)	9	..	..	..	..	..	..	A	.....	KM001538	2	96600-06016-00
		9	..	..	..	..	..	..	AC	.....	KM001638	2	96600-06016-00
	BOLT, SPECIAL (6X16)	9	..	..	..	..	..	..	A	KM001539	.....	2	96600-06016-08
		9	..	..	..	..	..	..	AC	KM001639	.....	2	96600-06016-08
		..	0	4	5	6	7	8		.....	.....	2	96600-06016-08
	BOLT, SPECIAL (6X16)	9	..	..	..	..	..	..	A	KM001539	.....	2	96700-06016-08
		9	..	..	..	..	..	..	AC	KM001639	.....	2	96700-06016-08
		..	0	4	5	6	7	8		.....	.....	2	96700-06016-08

 © AMERICAN HONDA MOTOR CO. INC. 1997

METERS

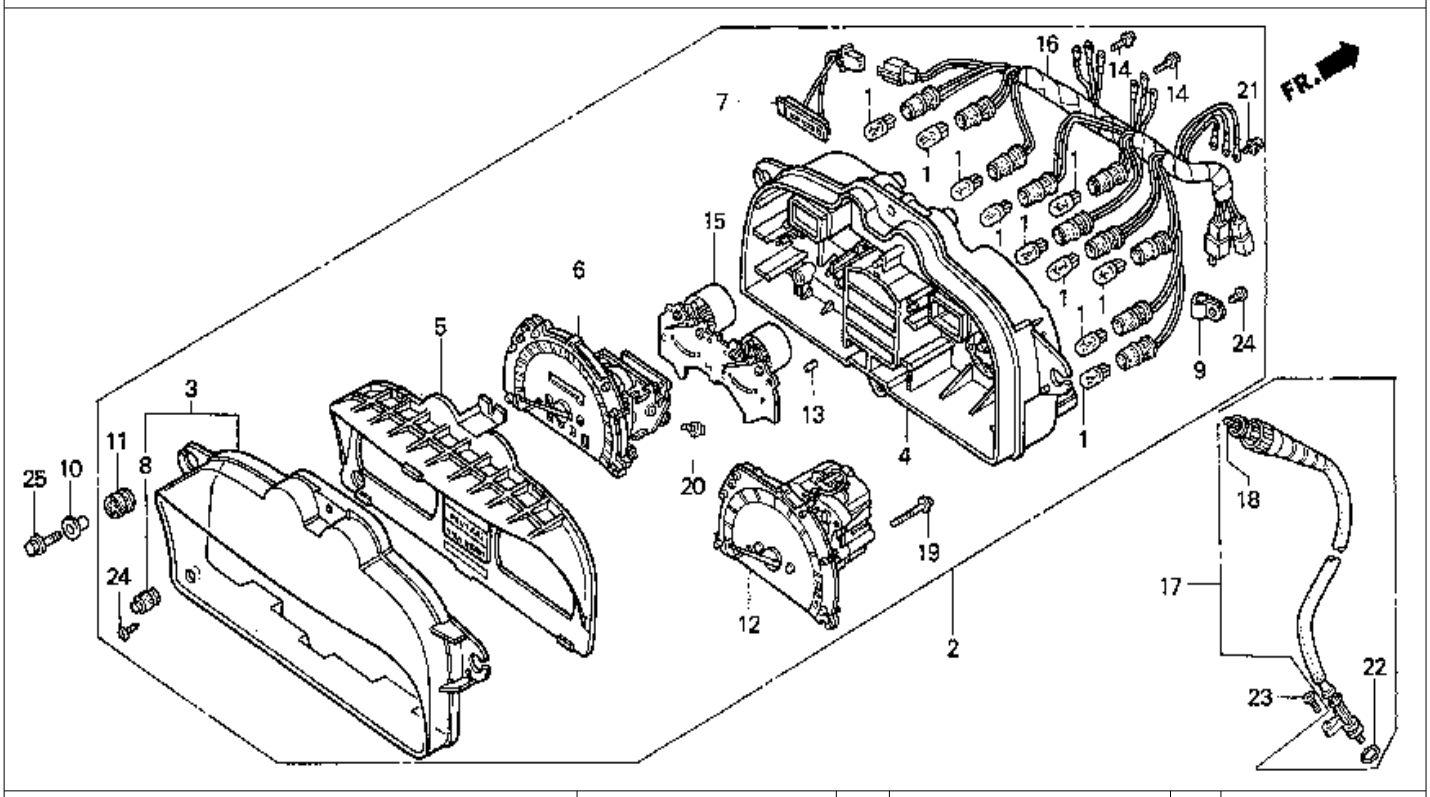

9 = PC800'89 6 = PC800'96
0 = PC800'90 7 = PC800'97
4 = PC800'94 8 = PC800'98
5 = PC800'95

Ref. No.	BLOCK NO. F-3 / DESCRIPTION	1989	1990	1994	1995	1996	1997	1998	AREA CODE	FRAME SERIAL FROM		FRAME NUMBER TO	QTY REQ	PART NUMBER
1	BULB, WEDGE BASE (12V 3.4W)	9	0	4	5	6	7	8		.....		.....	10	34908-GA7-701
	BULB, (12V3.4W) (158)	9	0	4	5	6	7	8		.....		.....	10	37102-567-009
	BULB, (12V3.4W) (NS)	9	0	4	5	6	7	8		.....		.....	10	37237-SA5-003
	BULB, (12V3.4W) (158)	9	0	4	5	6	7	8		.....		.....	10	37237-SA5-004
2	METER ASSY., COMBINATION	9	..	..	..	..	..	..		.....		.....	1	37100-MR5-671
	METER ASSY., COMBINATION	..	0	..	..	..	..	..	A	.....		LM102065	1	37100-MR5-870
		..	0	..	..	..	..	..	AC	.....		.....	1	37100-MR5-870
	METER ASSY., COMBINATION	..	0	..	..	..	..	..	A	.....		.....	1	37100-MR5-871
		..	0	..	..	..	..	..	AC	.....		.....	1	37100-MR5-871
		..	..	4	5	6	..	..		.....		.....	1	37100-MR5-871
	METER ASSY., COMBINATION	..	..	..	..	..	7	8		.....		.....	1	37100-MR5-A30
3	GLASS COMP., METER	9	0	4	5	6	7	8		.....		.....	1	37110-MR5-008
4	CASE ASSY., METER	9	..	..	..	..	..	..		.....		.....	1	37120-MR5-671
	CASE ASSY., METER	9	..	4	5	6	7	..		.....		.....	1	37120-MR5-871
		..	0	..	..	..	..	..	A	.....		.....	1	37120-MR5-871
		..	0	..	..	..	..	..	AC	.....		.....	1	37120-MR5-871
	CASE ASSY., METER	..	0	..	..	..	..	..	A	.....		LM102065	1	37120-MR5-870
		..	0	..	..	..	..	..	AC	.....		.....	1	37120-MR5-870

 © AMERICAN HONDA MOTOR CO. INC. 1997

METERS

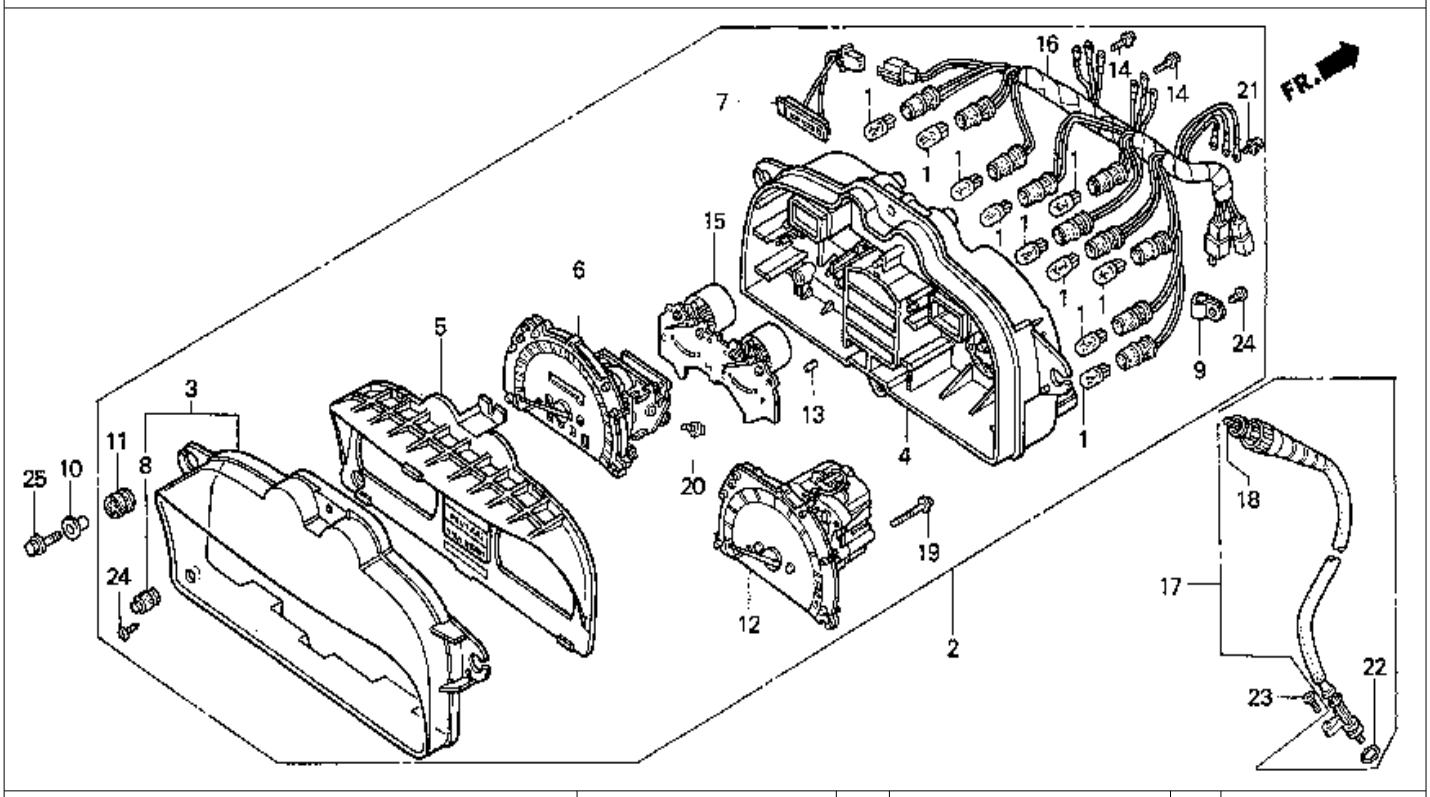

9 = PC800'89
0 = PC800'90
4 = PC800'94
5 = PC800'95
6 = PC800'96
7 = PC800'97
8 = PC800'98

Ref. No.	BLOCK NO. F-3 / DESCRIPTION	PC800 1989	1990	1994	1995	1996	1997	1998	AREA CODE	FRAME SERIAL NUMBER FROM	TO	QTY REQ	PART NUMBER
4	CASE ASSY., METER	..	..	..	..	..	..	8		.....	.....	1	37120-MR5-A30
5	PLATE ASSY., REFLECTING	9	0	4	5	6	7	8		.....	.....	1	37130-MR5-671
6	SPEEDOMETER ASSY. (KPH/MPH)	9	..	..	..	..	..	..		.....	.....	1	37200-MR5-671
	SPEEDOMETER ASSY.	..	0	..	..	..	..	..	A	.....	LM102065	1	37200-MR5-870
		..	0	..	..	..	..	..	AC	.....	.....	1	37200-MR5-870
	SPEEDOMETER ASSY.	..	0	..	..	..	..	..	A	.....	.....	1	37200-MR5-871
		..	0	..	..	..	..	..	AC	.....	.....	1	37200-MR5-871
		..	..	4	5	6	7	8		.....	.....	1	37200-MR5-871
7	SWITCH ASSY., LEAD	9	0	4	5	6	..	..		.....	.....	1	37203-MR5-008
8	KNOB, TRIP METER	9	0	4	5	6	7	8		.....	.....	1	37205-MR5-008
9	CLAMP	9	0	4	5	6	7	8		.....	.....	1	37215-MB6-831
10	COLLAR, SPEEDOMETER SETTING	9	0	4	5	6	7	8		.....	.....	4	37243-MM4-000
11	RUBBER, METER SETTING	9	0	4	5	6	7	8		.....	.....	4	37244-MB6-631
12	TACHOMETER ASSY.	9	0	4	5	6	7	8		.....	.....	1	37250-MR5-671
13	RUBBER, CUSHION	9	0	4	5	6	7	8		.....	.....	3	37304-198-901
14	SCREW-WASHER (3X22)	9	0	4	5	6	7	8		.....	.....	6	37305-KE5-008

 © AMERICAN HONDA MOTOR CO. INC. 1997

METERS

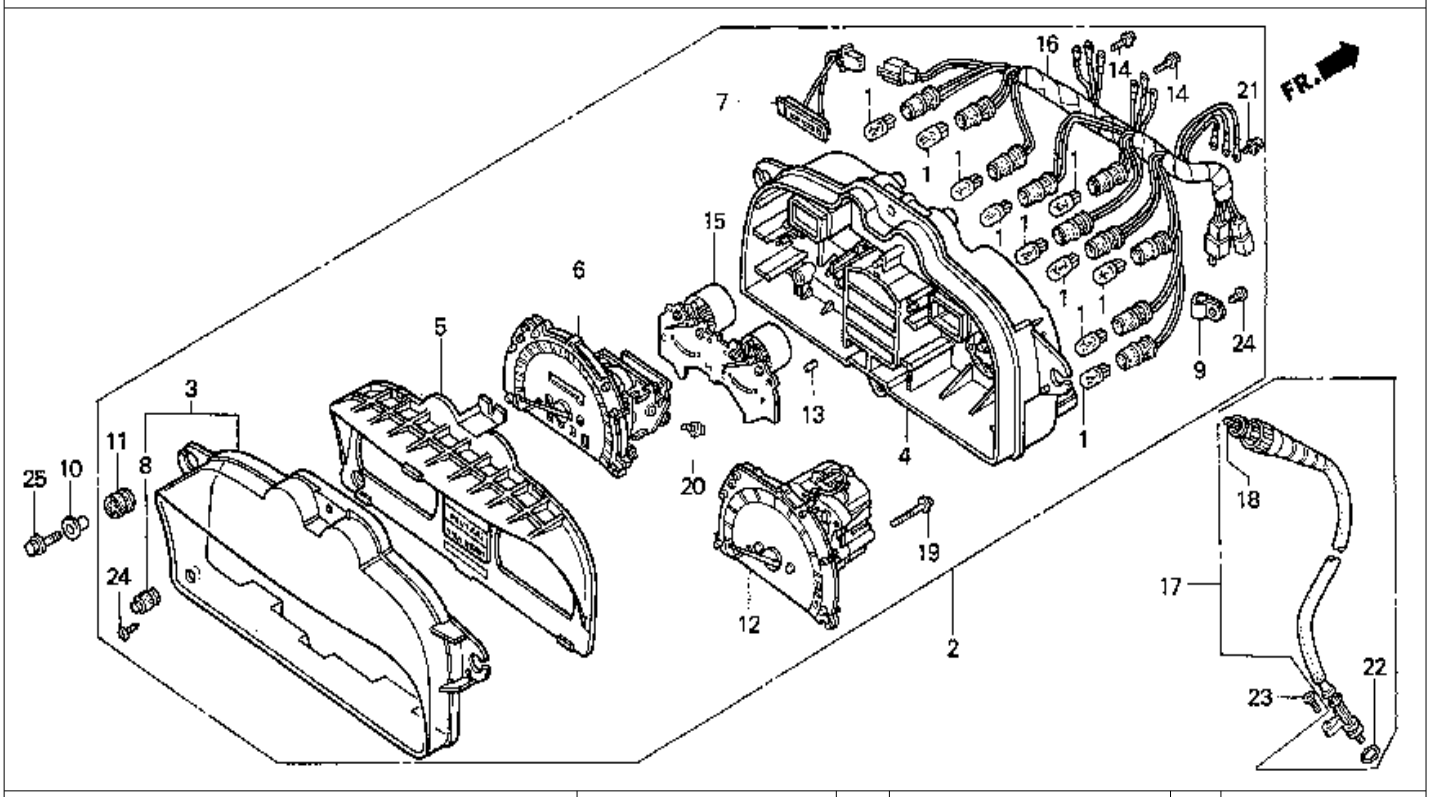

9 = PC800'89
0 = PC800'90
4 = PC800'94
5 = PC800'95
6 = PC800'96
7 = PC800'97
8 = PC800'98

Ref. No.	BLOCK NO. F-3 / DESCRIPTION	1989	1990	1994	1995	1996	1997	1998	AREA CODE	FRAME SERIAL NUMBER FROM	TO	QTY REQ	PART NUMBER
15	METER ASSY., FUEL & TEMPERATURE	9	0	4	5	6	7	8		.....	.....	1	37400-MR5-008
16	SOCKET COMP.	9	..	..	..	..	..	..		.....	.....	1	37619-MR5-008
	SOCKET COMP.	..	0	..	..	..	..	..	A	.....	LM102065	1	37619-MR5-870
		..	0	..	..	..	..	..	AC	.....	.....	1	37619-MR5-870
	SOCKET COMP.	..	0	..	..	..	..	..	A	LM102066	.....	1	37619-MR5-871
		..	..	4	5	6	..	..		.....	.....	1	37619-MR5-871
	SOCKET COMP.	..	..	..	..	..	7	8		.....	.....	1	37619-MR5-A30
17	CABLE ASSY., SPEEDOMETER	9	0	4	5	6	..	..		.....	.....	1	44830-MR5-000
	CABLE ASSY., SPEEDOMETER	..	..	..	..	..	7	8		.....	.....	1	44830-MAJ-G40
18	CABLE (INNER)	9	0	4	5	6	..	..		.....	.....	1	44831-MR5-300
	CABLE (INNER)	..	..	..	..	..	7	8		.....	.....	1	44831-MAJ-G40
19	SCREW, TAPPING (4X3)	9	0	4	5	6	7	8		.....	.....	2	90032-ML7-671
20	SCREW, FLANGE (4X8)	9	0	4	5	6	7	..		.....	.....	2	90101-GC8-008
	SCREW-WASHER, SPECIAL	..	..	..	..	..	..	8		.....	.....	2	90035-166-008
21	SCREW-WASHER (3X12)	9	0	4	5	6	7	8		.....	.....	3	90108-GN2-008
22	O-RING (6.8X1.9)	9	0	4	5	6	7	8		.....	.....	1	91301-027-000
	O-RING (6.8X1.9)	9	0	4	5	6	7	8		.....	.....	1	91306-PJ4-000
	O-RING B (6.8X1.9)	9	0	4	5	6	7	8		.....	.....	1	91310-MC7-003

55B © AMERICAN HONDA MOTOR CO. INC. 1997 E4

METERS

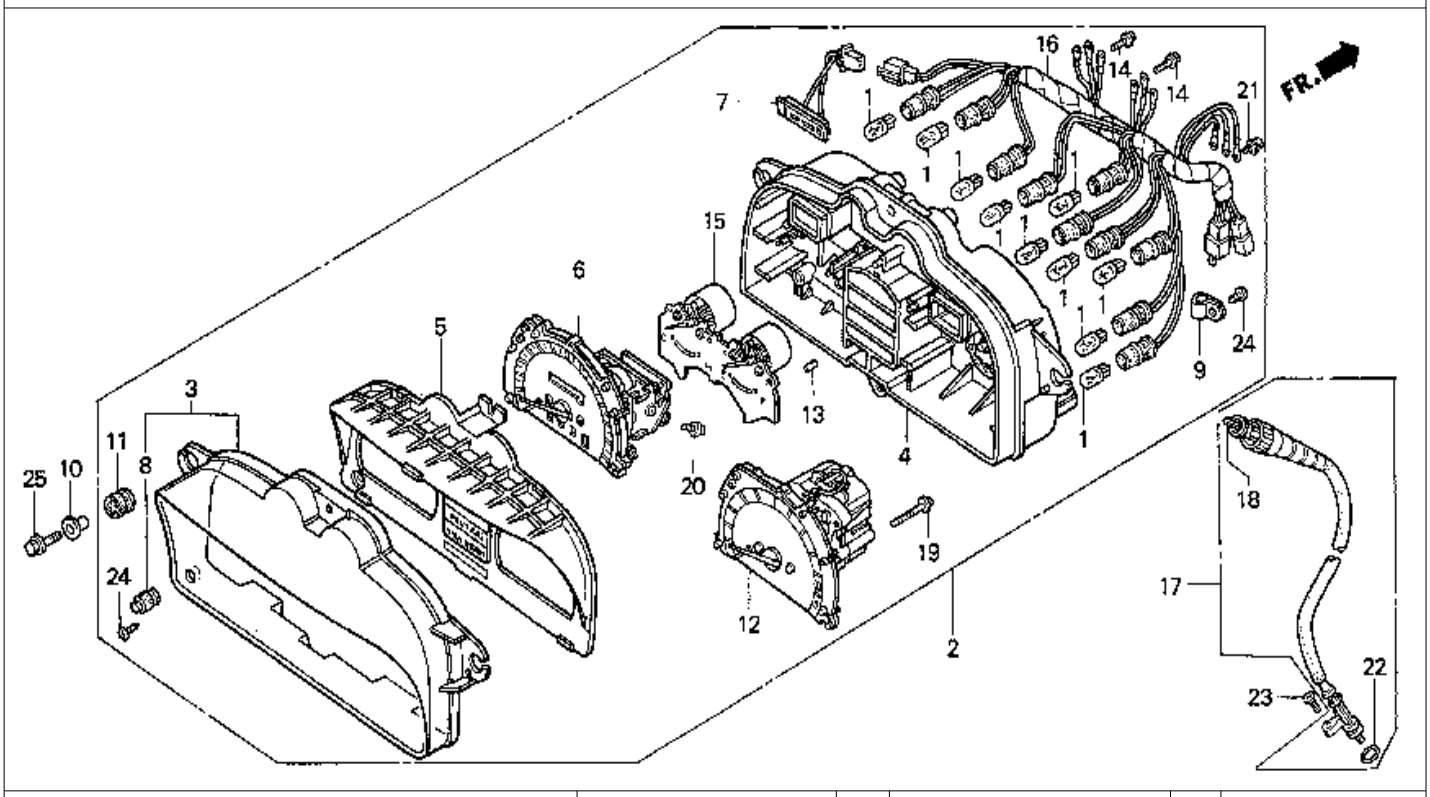

9 = PC800'89
0 = PC800'90
4 = PC800'94
5 = PC800'95
6 = PC800'96
7 = PC800'97
8 = PC800'98

Ref. No.	BLOCK NO. F-3 / DESCRIPTION	PC800 1989	1990	1994	1995	1996	1997	1998	AREA CODE	FRAME SERIAL NUMBER FROM	TO	QTY REQ	PART NUMBER
23	SCREW, OVAL (5X20)	9	0	4	5	6	7	8		.....	.....	1	93700-05020-00
24	SCREW, TAPPING (4X16)	9	0	4	5	6	7	..		.....	.....	3	93901-24420
	SCREW, TAPPING (4X16)	..	..	..	..	..	..	8		.....	.....	3	93903-24420
25	BOLT, FLANGE (6X25)	9	0	4	5	6	7	8		.....	.....	4	95701-06025-00

 © AMERICAN HONDA MOTOR CO. INC. 1997

HANDLE SWITCH

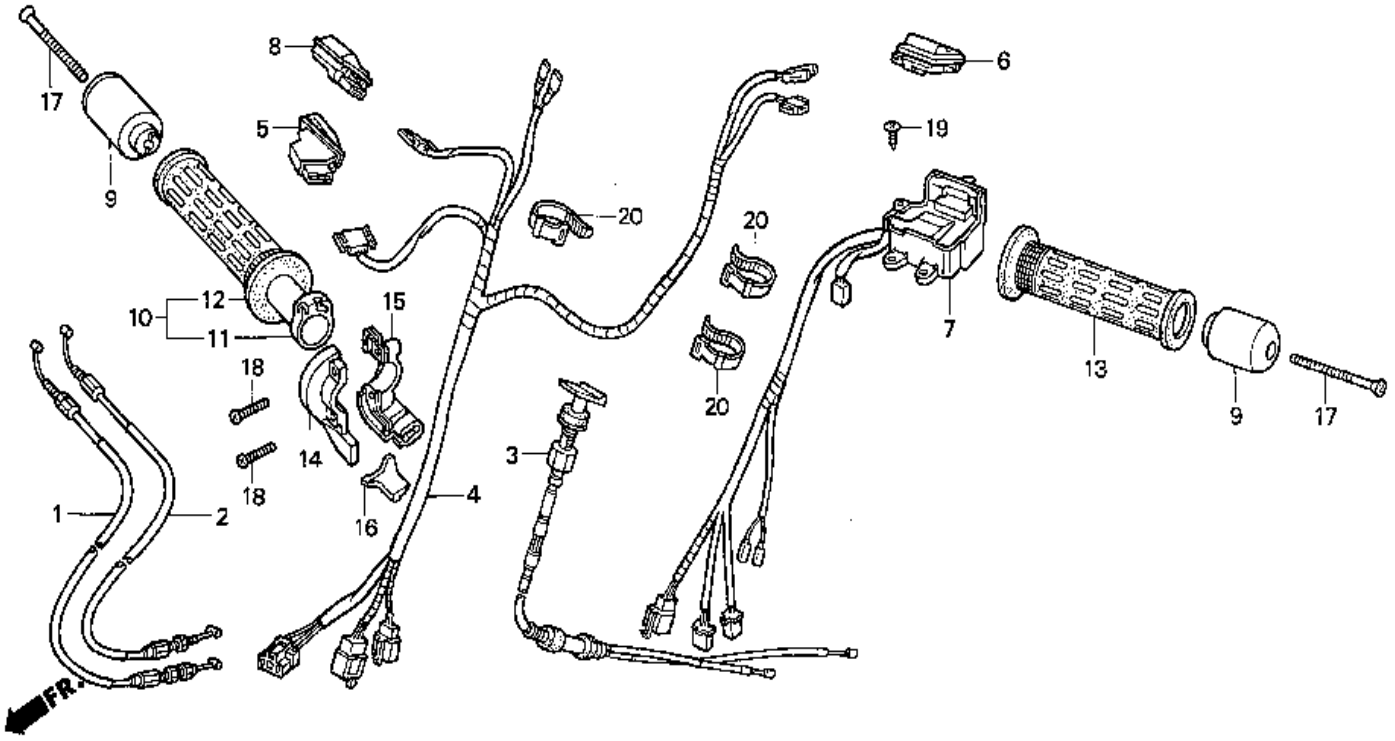

9 = PC800'89 6 = PC800'96
0 = PC800'90 7 = PC800'97
4 = PC800'94 8 = PC800'98
5 = PC800'95

Ref. No.	BLOCK NO. F-4 / DESCRIPTION	PC800 1989	1990	1994	1995	1996	1997	1998	AREA CODE	FRAME SERIAL NUMBER FROM	TO	QTY REQ	PART NUMBER
1	CABLE COMP. A, THROTLE	9	0	4	5	6	7	8		.....	.....	1	17910-MR5-000
2	CABLE COMP. B, THROTLE	9	0	4	5	6	7	8		.....	.....	1	17920-MR5-000
3	CABLE COMP., CHOKE *NH252*												
	(ATLANTIC GRAY)	9	..	..	..	..	..	..		.....	.....	1	17950-MR5-010ZA
	CABLE COMP., CHOKE	9	..	..	5	6	..	..		.....	.....	1	17950-MR5-870
	CABLE COMP., CHOKE *NH252*												
	(ATLANTIC GRAY)	9	0	4	5	6	..	..		.....	.....	1	17950-MR5-870ZA
	CABLE COMP., CHOKE *NH1* (BLACK)	..	..	..	..	..	7	8		.....	.....	1	17950-MR5-870ZB
4	WIRE COMP., STARTER KILL SWITCH	9	0	4	5	6	..	..		.....	.....	1	35131-MR5-670
	CORD COMP., HANDLE SWITCH	..	..	..	..	..	7	8		.....	.....	1	35131-MR5-A30
5	SWITCH UNIT, STARTER	9	0	4	5	6	7	8		.....	.....	1	35160-MR5-671
6	SWITCH UNIT, DIMMER	9	..	..	..	..	..	..		.....	.....	1	35170-MR5-003
	SWITCH UNIT, DIMMER	9	..	4	5	6	7	8		.....	.....	1	31570-MR5-013
	SWITCH UNIT, DIMMER	..	0	..	..	..	..	..		.....	.....	1	35170-MR5-870
7	SWITCH ASSY., TURN SIGNAL	9	..	..	..	..	..	..		.....	.....	1	35200-MR5-003

 © AMERICAN HONDA MOTOR CO. INC. 1997

HANDLE SWITCH

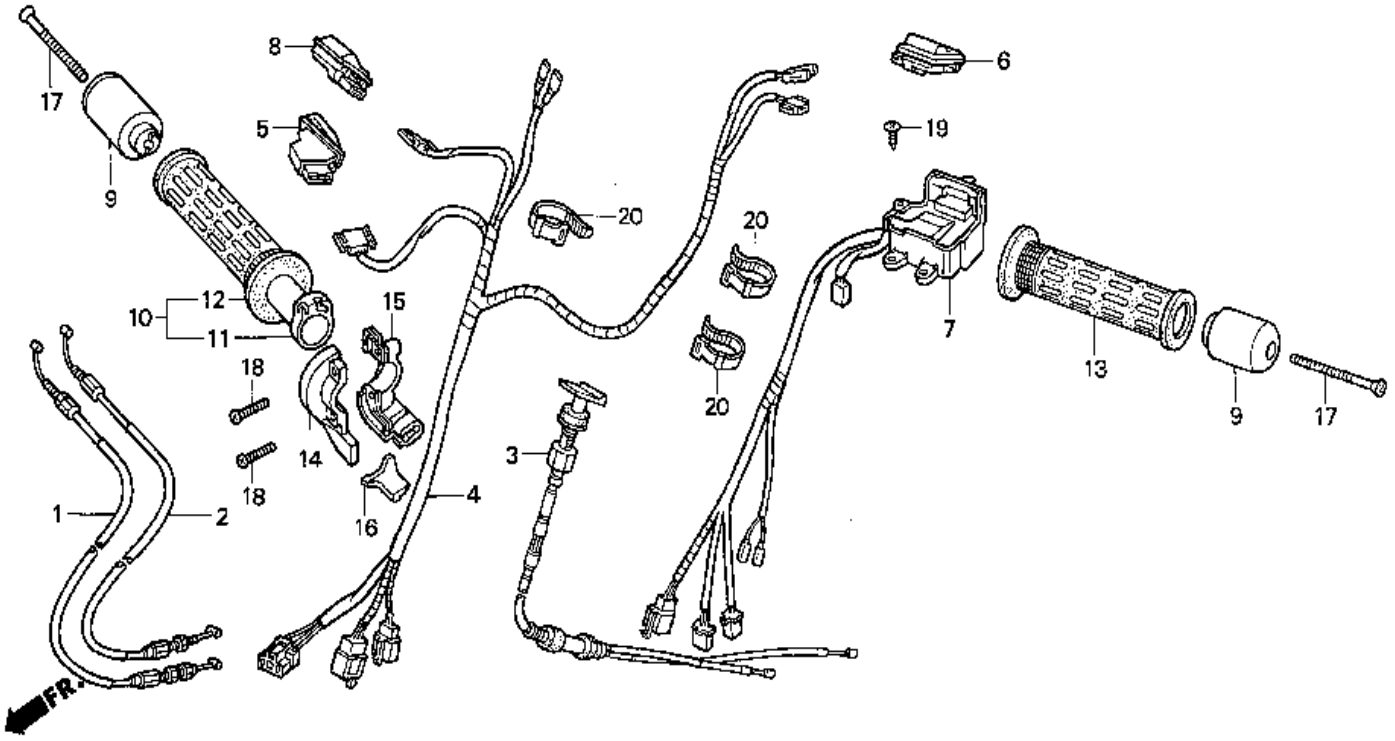

9 = PC800'89 6 = PC800'96
0 = PC800'90 7 = PC800'97
4 = PC800'94 8 = PC800'98
5 = PC800'95

Ref. No.	BLOCK NO. F-4 / DESCRIPTION	1989	1990	1994	1995	1996	1997	1998	AREA CODE	FRAME SERIAL FROM		FRAME NUMBER TO	QTY REQ	PART NUMBER
7	SWITCH ASSY., TURN SIGNAL	9	..	4	5	6	..	..		.....		.....	1	35200-MR5-871
		..	0	..	..	..	..	..	A	LM102547		.....	1	35200-MR5-871
	SWITCH ASSY., TURN SIGNAL	..	0	..	..	..	..	..	A	.....		LM102546	1	35200-MR5-870
		..	0	..	..	..	..	..	AC	.....		.....	1	35200-MR5-870
	SWITCH ASSY., TURN SIGNAL	..	..	..	..	..	7	8		.....		.....	1	35200-MR5-A31
8	SWITCH UNIT, KILL	9	..	..	..	..	..	..		.....		.....	1	35210-MR5-003
	SWITCH UNIT, KILL	..	0	4	5	6	7	8		.....		.....	1	35210-MR5-870
9	WEIGHT, HANDLEBAR	9	..	..	..	..	..	..		.....		.....	2	53105-MM5-000
	WEIGHT, HANDLEBAR	..	0	4	5	6	7	8		.....		.....	2	53105-MM5-870
10	GRIP COMP., R	..	..	4	5	6	7	8		.....		.....	1	53140-MR5-000
11	PIPE, THROTTLE GRIP	9	0	..	..	..	..	..		.....		.....	1	53141-MR5-000
12	GRIP, R. HANDLE	9	0	4	5	6	7	..		.....		.....	1	53165-MR5-000
13	GRIP, L. HANDLE	9	0	4	5	6	7	8		.....		.....	1	53166-MR5-000
14	HOUSING, THROTTLE (UPPER)	9	0	4	5	6	7	8		.....		.....	1	53167-MR5-000
15	HOUSING, THROTTLE (LOWER)	9	0	4	5	6	7	8		.....		.....	1	53168-MR5-000
16	SLIDER, THROTTLE CABLE	9	0	4	5	6	7	8		.....		.....	1	53169-KB7-000

 © AMERICAN HONDA MOTOR CO. INC. 1997

HANDLE SWITCH

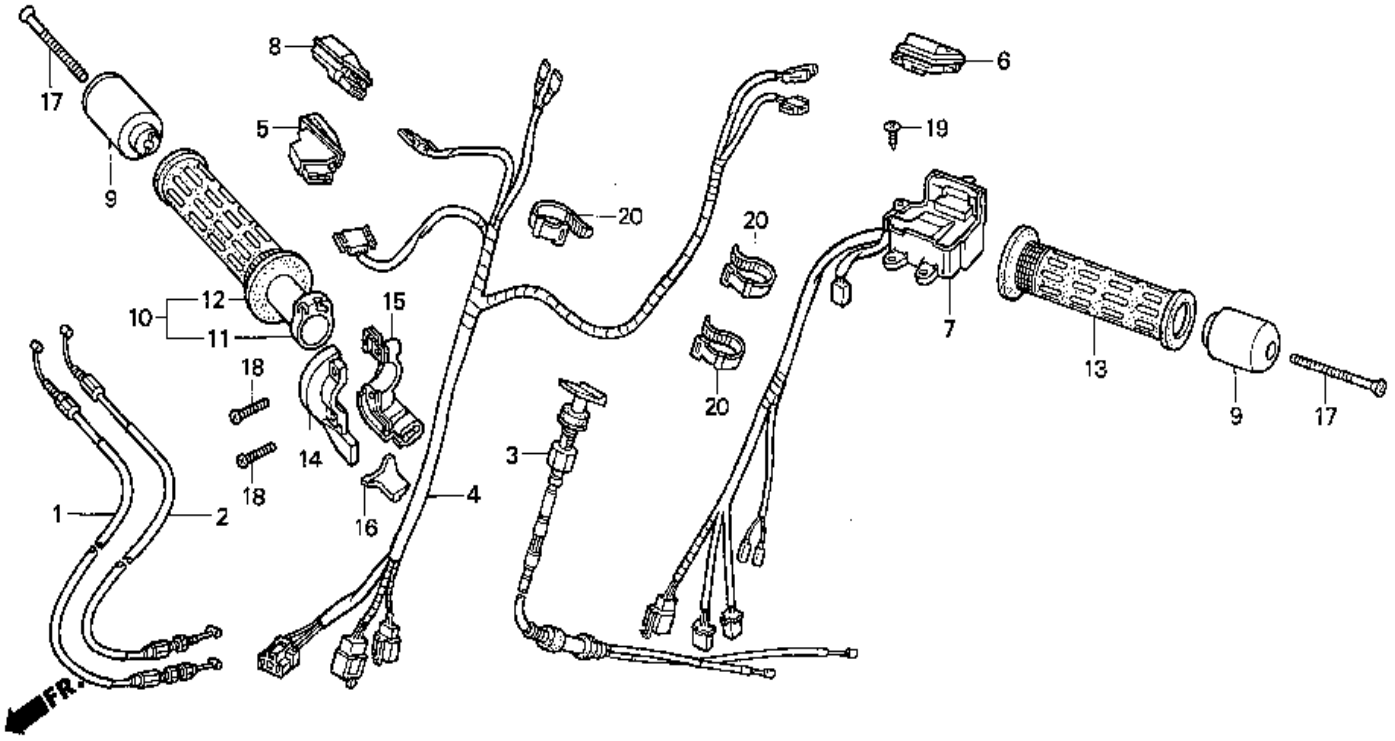

9 = PC800'89 6 = PC800'96
0 = PC800'90 7 = PC800'97
4 = PC800'94 8 = PC800'98
5 = PC800'95

Ref. No.	BLOCK NO. F-4 / DESCRIPTION	1989	1990	1994	1995	1996	1997	1998	AREA CODE	FRAME SERIAL FROM		FRAME NUMBER TO	QTY REQ	PART NUMBER
17	SCREW, HANDLEBAR WEIGHT	9	..	..	..	..	..	..		.....		.....	2	90126-MJ4-700
	BOLT, SOCKET (8X65)	..	0	4	5	6	7	8		.....		.....	2	96700-08065-07
18	SCREW, PAN (5X20)	9	0	4	5	6	7	8		.....		.....	2	93500-05020-0A
19	SCREW, TAPPING (4X16)	9	0	4	5	6	7	8		.....		.....	3	93903-24420
20	BAND, WIRE HARNESS	9	..	..	..	..	..	..	A	.....		.....	3	90650-MA6-720
		9	..	..	..	..	..	..	AC	.....		.....	3	90650-MA6-720
		..	0	4	5	6	7	8		.....		.....	3	90650-MA6-720
	BAND B2, CABLE HARNESS	9	..	..	..	..	..	..	A	.....		.....	3	95014-62200
		9	..	..	..	..	..	..	AC	.....		.....	3	95014-62200

 © AMERICAN HONDA MOTOR CO. INC. 1997

FRONT BRAKE MASTER CYLINDER

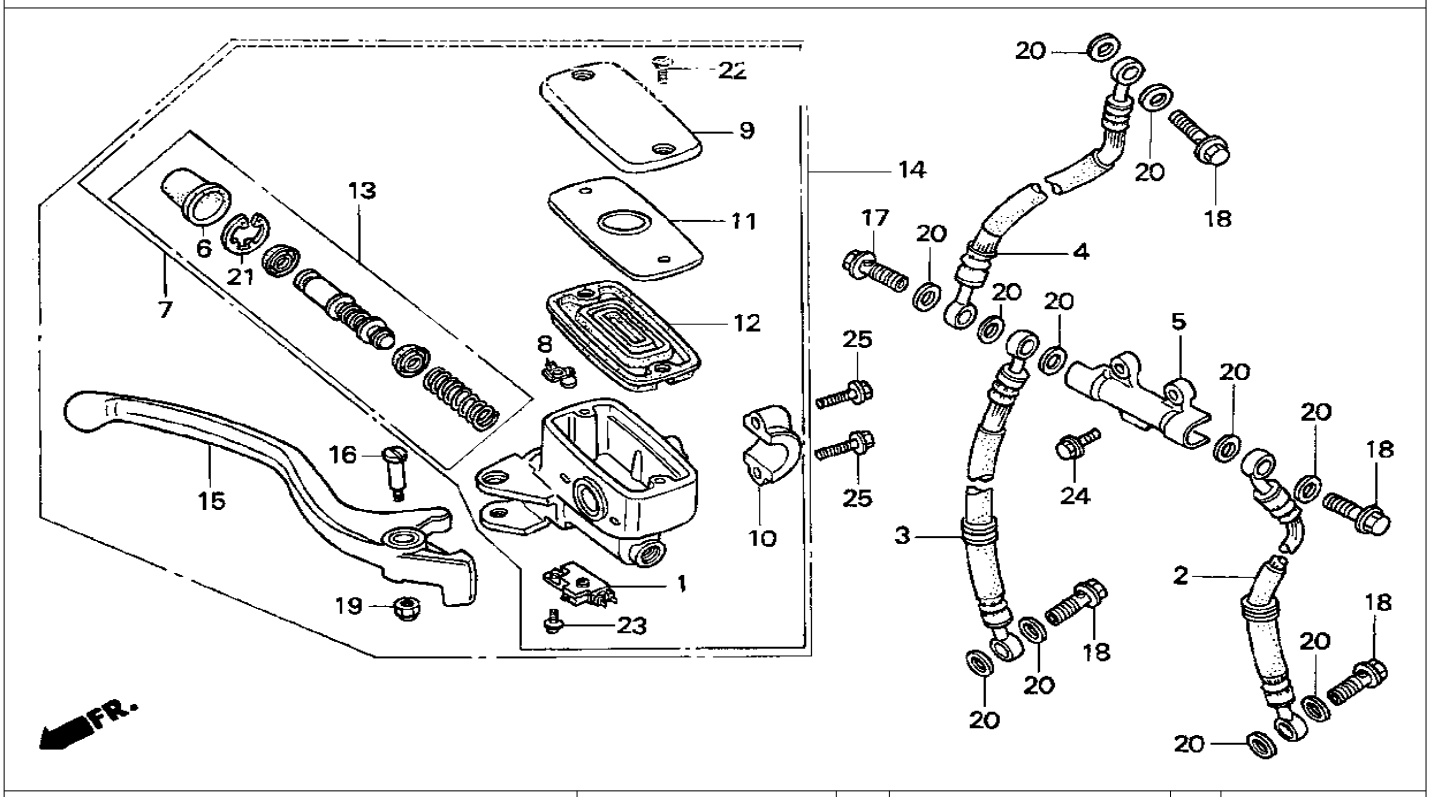

9 = PC800'89 6 = PC800'96
0 = PC800'90 7 = PC800'97
4 = PC800'94 8 = PC800'98
5 = PC800'95

Ref. No.	BLOCK NO. F-5 / DESCRIPTION	PC800 1989	1990	1994	1995	1996	1997	1998	AREA CODE	FRAME SERIAL NUMBER FROM	TO	QTY REQ	PART NUMBER
1	SWITCH ASSY., FR. STOP	9	0	4	5	6	7	8		.....	.....	1	35340-MM5-600
2	HOSE, L. FR. BRAKE	9	0	..	..	..	..	..		.....	.....	1	45124-MR5-003
	HOSE, L. FR. BRAKE	..	..	4	5	6	..	..		.....	.....	1	45124-MR5-013
	HOSE COMP., R. FR BRAKE	..	..	..	..	..	7	8		.....	.....	1	45124-MR5-A31
3	HOSE, R. FR. BRAKE	9	0	..	..	..	..	..		.....	.....	1	45125-MR5-003
	HOSE, R. FR. BRAKE	..	..	4	5	6	..	..		.....	.....	1	45125-MR5-013
	HOSE COMP., L. FR BRAKE	..	..	..	..	..	7	8		.....	.....	1	45125-MR5-A31
4	HOSE B, FR. BRAKE	9	0	..	..	..	..	..		.....	.....	1	45126-MR5-003
	HOSE B, FR. BRAKE	..	..	4	5	6	7	8		.....	.....	1	45126-MR5-013
5	JOINT, TWO-WAY (NISSIN)	9	0	4	5	6	7	8		.....	.....	1	45127-MA1-003
6	BOOT COMP	9	0	4	5	6	7	8		.....	.....	1	45505-410-003
7	MASTER CYLINDER SUB-ASSY., FR. BRAKE	..	..	4	5	6	7	8		.....	.....	1	45510-MR5-305
8	PROTECTOR	9	0	4	5	6	7	8		.....	.....	1	45512-MA6-006
9	CAP, MASTER CYLINDER (NISSIN)	9	0	4	5	6	7	8		.....	.....	1	45513-MM5-006
10	HOLDER, MASTER CYLINDER	9	0	4	5	6	7	8		.....	.....	1	45517-166-006

 © AMERICAN HONDA MOTOR CO. INC. 1997

FRONT BRAKE MASTER CYLINDER

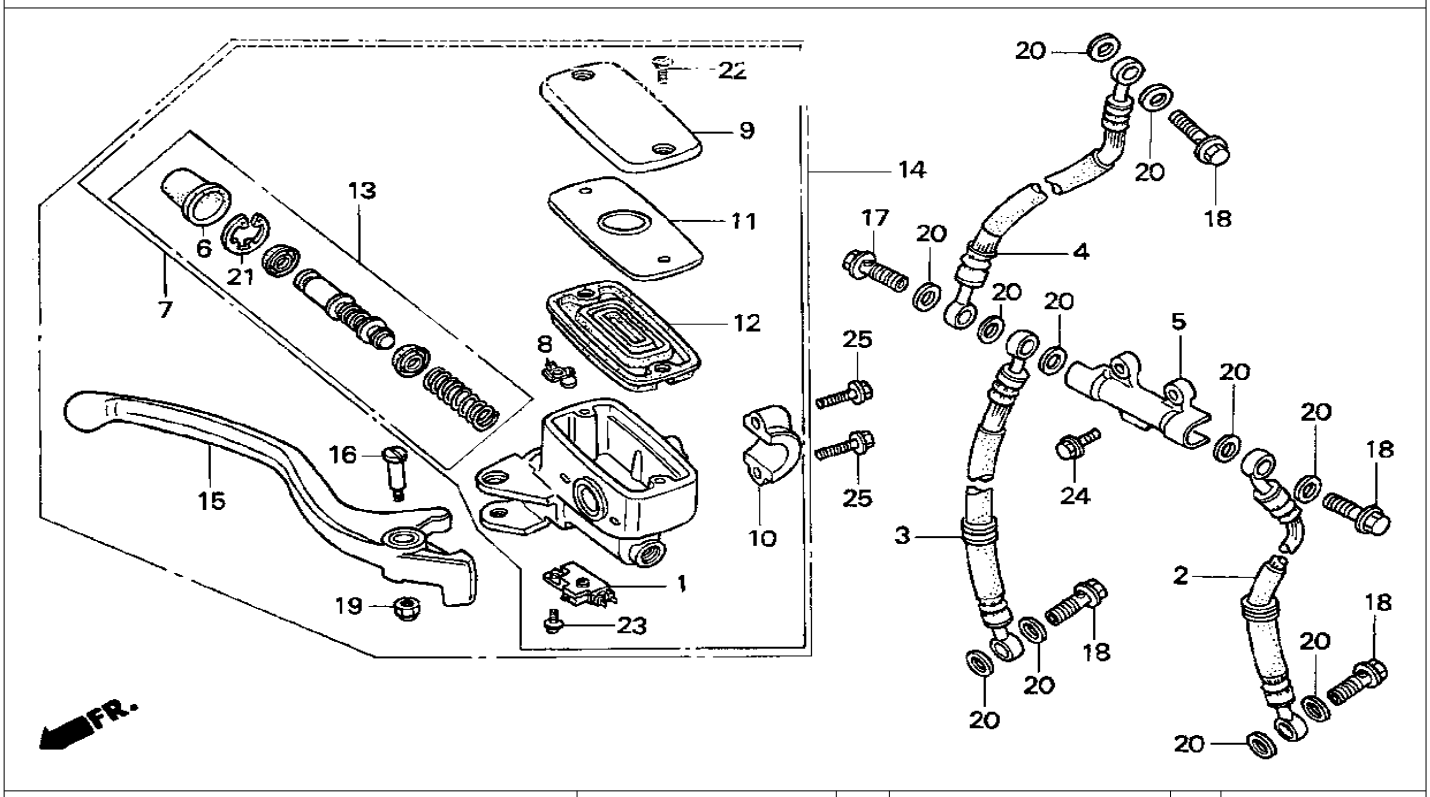

9 = PC800'89 6 = PC800'96
0 = PC800'90 7 = PC800'97
4 = PC800'94 8 = PC800'98
5 = PC800'95

Ref. No.	BLOCK NO. F-5 / DESCRIPTION	1998 99	1999 00	1999 04	1999 05	1999 06	1999 07	1999 08	AREA CODE	FRAME SERIAL FROM	FRAME NUMBER TO	QTY REQ	PART NUMBER
11	PLATE, DIAPHRAGM (NISSIN)	9	0	4	5	6	7	8		.....	.....	1	45518-MM5-006
12	DIAPHRAGM (NISSIN)	9	0	4	5	6	7	8		.....	.....	1	45520-MM5-006
13	MASTER CYLINDER SET	9	0	4	5	6	7	8		.....	.....	1	45530-MA4-671
14	MASTER CYLINDER SET, FR. BRAKE	9	0	..	..	..	..	..		.....	.....	1	45550-MR5-305
15	LEVER COMP., R. HANDLEBAR	9	0	4	5	6	7	8		.....	.....	1	53175-MR5-003
16	BOLT, R. HANDLEBAR PIVOT	9	0	4	5	6	7	8		.....	.....	1	90114-MA5-671
17	BOLT, OIL (10X34)	9	0	4	5	..	..	..		.....	.....	1	90145-MB0-010
	BOLT, OIL (10X34)	..	..	..	..	6	7	8		.....	.....	1	90145-MR8-004
18	BOLT, OIL (10X22)	9	0	4	5	6	7	..		.....	.....	4	90145-MS9-611
	BOLT, OIL (10X22)	..	..	..	..	..	..	8		.....	.....	4	90145-MS9-612
19	NUT, CAP (6MM)	9	..	..	..	..	..	..	A	.....	KM002778	1	90215-GM0-000
		9	..	..	..	..	..	..	AC	.....	KM000075	1	90215-GM0-000
	NUT, CAP (6MM)	9	..	..	..	..	..	..	A	KM002779	.....	1	90215-GM0-000
		9	..	..	..	..	..	..	AC	KM000076	.....	1	90215-GM0-000
		..	0	..	..	..	..	..		.....	.....	1	90215-GM0-000

 © AMERICAN HONDA MOTOR CO. INC. 1997

FRONT BRAKE MASTER CYLINDER

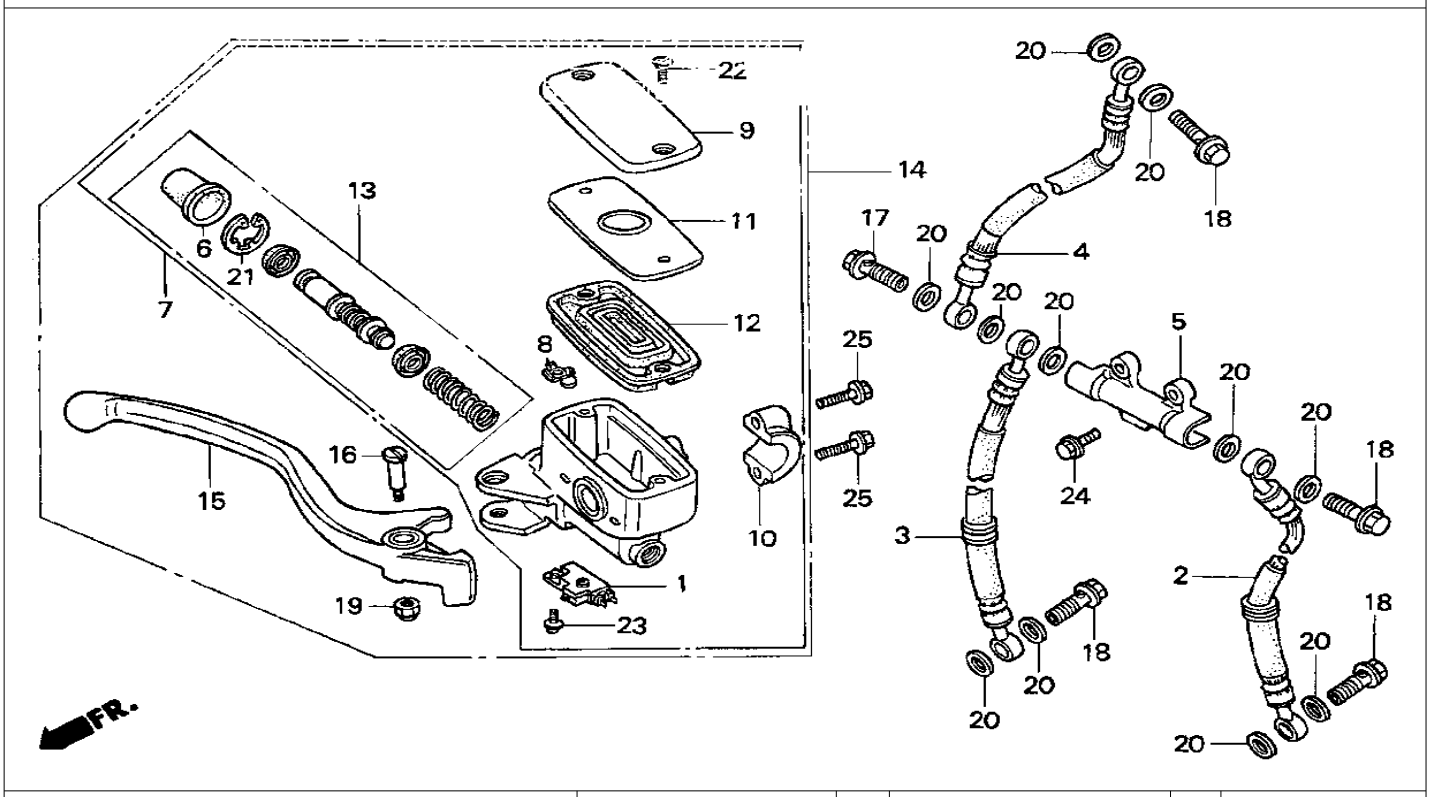

9 = PC800'89 6 = PC800'96
0 = PC800'90 7 = PC800'97
4 = PC800'94 8 = PC800'98
5 = PC800'95

Ref. No.	BLOCK NO. F-5 / DESCRIPTION	1989	1990	1994	1995	1996	1997	1998	AREA CODE	FRAME SERIAL NUMBER FROM	TO	QTY REQ	PART NUMBER
19	NUT, CAP (6MM)	..	..	4	..	..	..	..		.....	RM200917	1	90215-GM0-000
		..	..	4	..	..	..	..		.....	RM200200	1	90215-GM0-000
	NUT, CAP (6MM)	9	..	..	..	..	..	..	A	KM002779	.....	1	90308-MT8-000
		9	..	..	..	..	..	..	AC	KM000076	.....	1	90308-MT8-000
		..	0	..	5	6	7	8		.....	.....	1	90308-MT8-000
		..	..	4	..	..	..	..	A	.....	.....	1	90308-MT8-000
		..	..	4	..	..	..	..	AC	.....	.....	1	90308-MT8-000
	NUT, CAP (6MM)	..	..	4	..	..	..	..	A	RM200918	.....	1	90201-428-900
		..	..	4	..	..	..	..	AC	RM200201	.....	1	90201-428-900
		..	..	..	5	6	7	8		.....	.....	1	90201-428-900
20	WASHER, BOLT OIL	9	0	4	5	6	7	8		.....	.....	11	90545-300-000
21	CIRCLIP	9	0	4	5	6	7	8		.....	.....	1	90651-MA5-671
22	SCREW, FLAT (4X12)	9	0	4	5	6	7	8		.....	.....	2	93600-04012-0G
	SCREW, FLAT (4X12)	9	0	4	5	6	7	8		.....	.....	2	93600-04012-1G

 © AMERICAN HONDA MOTOR CO. INC. 1997 E7

PAGE 61 CONTINUED

FRONT BRAKE MASTER CYLINDER

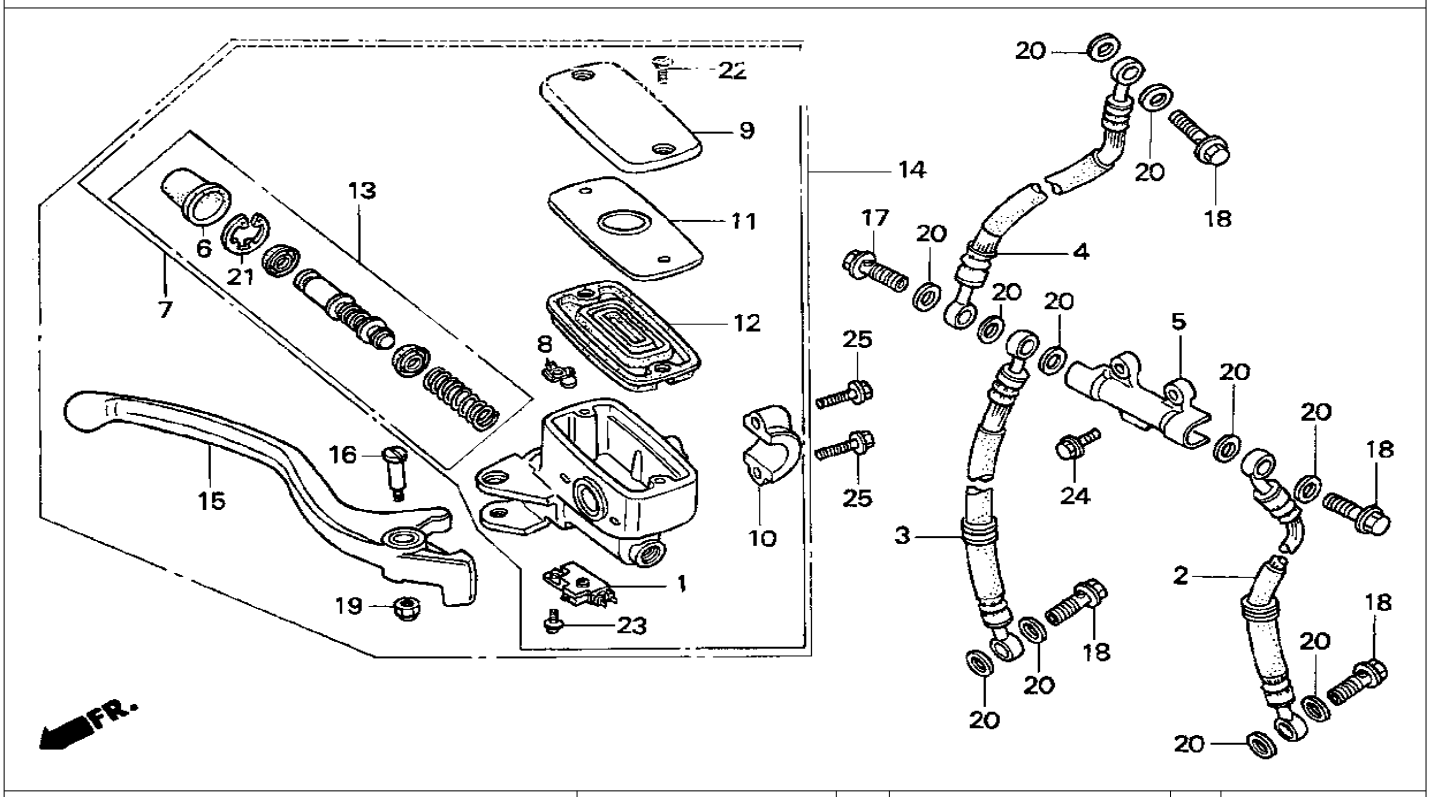

9 = PC800'89 6 = PC800'96
0 = PC800'90 7 = PC800'97
4 = PC800'94 8 = PC800'98
5 = PC800'95

Ref. No.	BLOCK NO. F-5 / DESCRIPTION	1989	1990	1994	1995	1996	1997	1998	AREA CODE	FRAME SERIAL FROM	FRAME NUMBER TO	QTY REQ	PART NUMBER
		PC800											
23	SCREW-WASHER (4X12)	9	0	..	..	..	..	..		.....	.....	1	93893-04012-08
		..	..	4	..	..	..	..	A	.....	RM200917	1	93893-04012-08
		..	..	4	..	..	..	..	AC	.....	RM200200	1	93893-04012-08
	SCREW-WASHER (4X12)	9	0	..	..	..	..	..		.....	.....	1	93893-04012-18
		..	..	4	..	..	..	..	A	.....	RM200917	1	93893-04012-18
		..	..	4	..	..	..	..	AC	.....	RM200200	1	93893-04012-18
	SCREW-WASHER (4X12)	..	..	4	..	..	..	..	A	RM200918	.....	1	93893-04012-07
		..	..	4	..	..	..	..	AC	RM200201	.....	1	93893-04012-07
		..	..	..	5	6	7	8		.....	.....	1	93893-04012-07
	SCREW-WASHER (4X12)			4					A	RM200918	.....	1	93893-04012-17
				4					AC	RM200201	.....	1	93893-04012-17
					5	6	7	8		.....	.....	1	93893-04012-17
24	BOLT, FLANGE (6X20)	9								.....	.....	2	95700-06020-07
	BOLT, FLANGE (6X20)		0	4	5	6	7	8		.....	.....	2	95701-06020-07
25	BOLT, FLANGE (6X25)	9								.....	.....	2	96001-06025-07
	BOLT, FLANGE (6X25)		0	4	5	6	7	8		.....	.....	2	96001-06022-07

61/62 © AMERICAN HONDA MOTOR CO. INC. 1997 E7/E8

PAGE 61 AND 62

CLUTCH MASTER CYLINDER

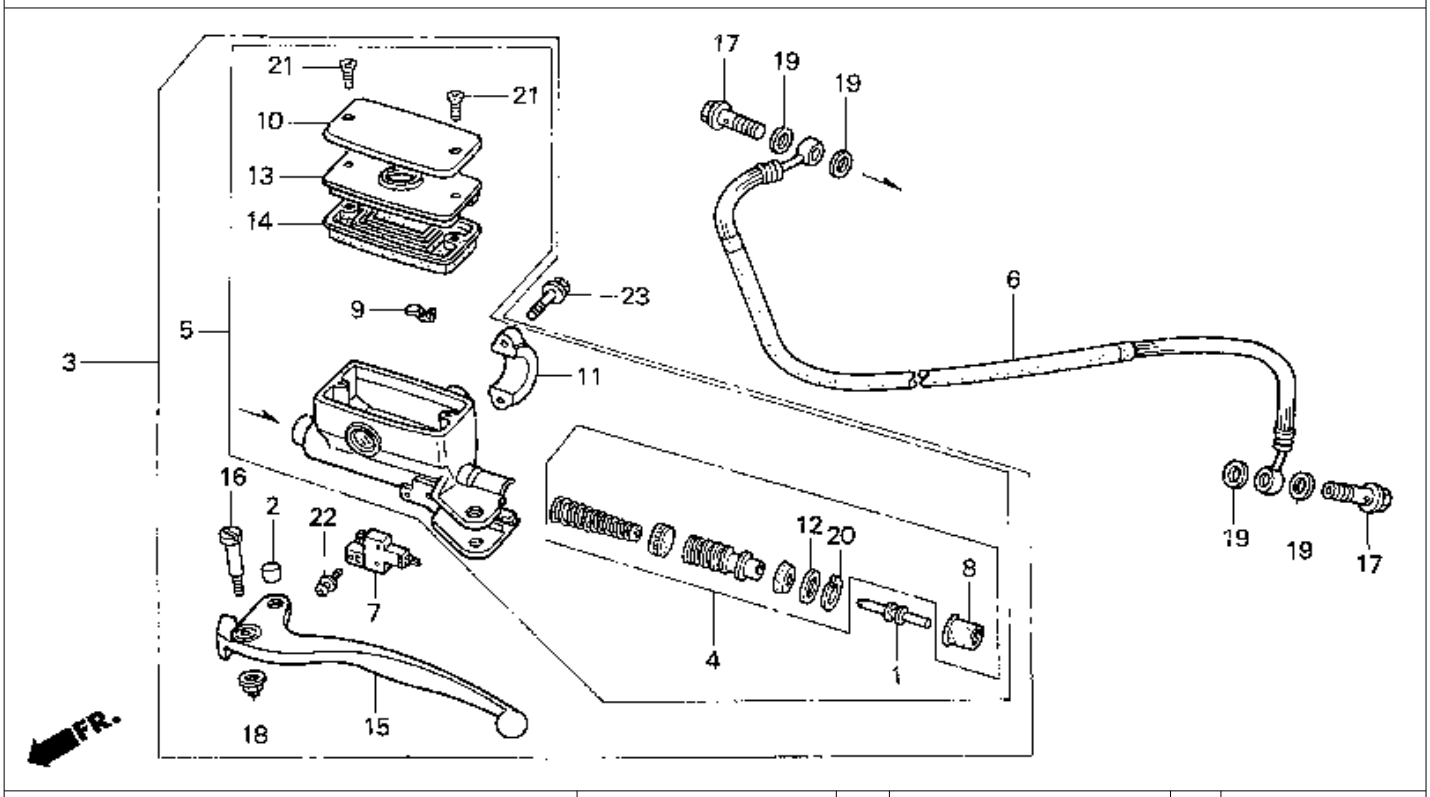

9 = PC800'89
0 = PC800'90
4 = PC800'94
5 = PC800'95
6 = PC800'96
7 = PC800'97
8 = PC800'98

Ref. No.	BLOCK NO. F-6 / DESCRIPTION	PC800 1989	1990	1994	1995	1996	1997	1998	AREA CODE	FRAME SERIAL NUMBER FROM	TO	QTY REQ	PART NUMBER
1	ROD, PUSH	9	0	4	5	6	7	8		.....	.....	1	22884-MB0-006
2	BUSH	9	0	4	5	6	7	8		.....	.....	1	22885-MB0-006
3	MASTER CYLINDER SET, CLUTCH	9	0	..	..	..	..	..		.....	.....	1	22885-MR5-305
4	PISTON SET, CLUTCH MASTER CYLINDER	9	0	4	5	6	7	8		.....	.....	1	22886-MB0-305
5	MASTER CYLINDER SUB-ASSY., CLUTCH	..	..	4	5	6	7	8		.....	.....	1	22890-MR5-305
6	HOSE COMP., CLUTCH	9	0	4	5	6	7	8		.....	.....	1	22900-MR5-000
7	SWITCH ASSY., CLUTCH	9	0	4	5	6	7	8		.....	.....	1	35330-MB0-003
8	BOOT COMP	9	0	4	5	6	7	8		.....	.....	1	45504-410-003
9	PROTECTOR	9	0	4	5	6	7	8		.....	.....	1	45512-MA6-006
10	CAP, MASTER CYLINDER (NISSIN)	9	0	4	5	6	7	8		.....	.....	1	45513-MM5-006
11	HOLDER, MASTER CYLINDER	9	0	4	5	6	7	8		.....	.....	1	45517-166-006
12	PLATE, STOPPER	9	0	4	5	6	7	8		.....	.....	1	45518-MB0-006
13	PLATE, DIAPHRAGM (NISSIN)	9	0	4	5	6	7	8		.....	.....	1	45518-MM5-006
14	DIAPHRAGM (NISSIN)	9	0	4	5	6	7	8		.....	.....	1	45520-MM5-006
15	LEVER COMP., L. HANDLEBAR	9	0	4	5	6	7	8		.....	.....	1	53178-KM3-006

 © AMERICAN HONDA MOTOR CO. INC. 1997

CLUTCH MASTER CYLINDER

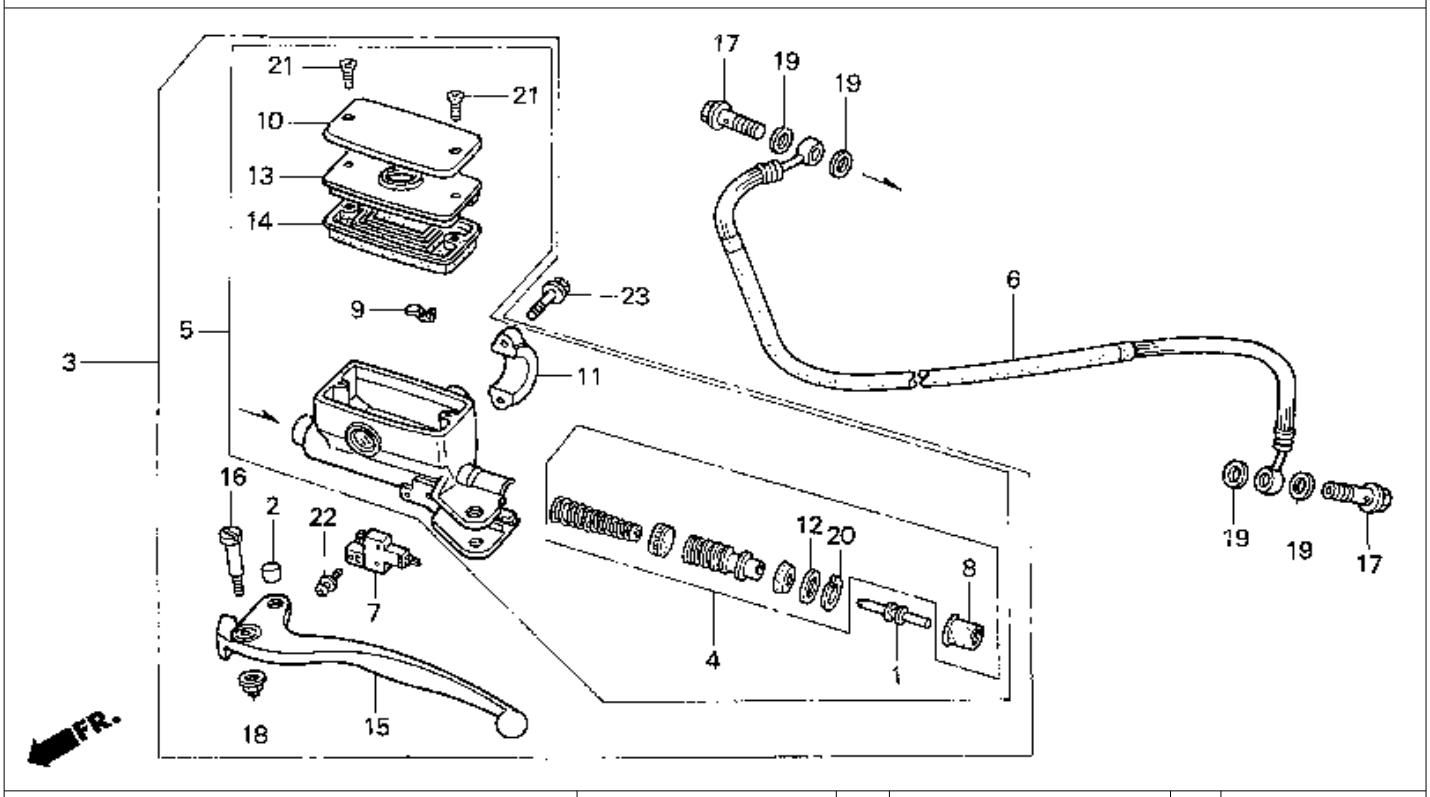

9 = PC800'89 6 = PC800'96
0 = PC800'90 7 = PC800'97
4 = PC800'94 8 = PC800'98
5 = PC800'95

Ref. No.	BLOCK NO. F-6 / DESCRIPTION	1989 99	1990 00	1994 04	1995 05	1996 06	1997 07	1998 08	AREA CODE	FRAME SERIAL FROM		FRAME NUMBER TO	QTY REQ	PART NUMBER
16	BOLT, R. HANDLEBAR PIVOT	9	0	4	5	6	7	8		.....		.....		90144-MA5-671
17	BOLT, OIL (10X22)	9	0	4	5	6	7	..		.....		.....		90145-MS9-611
18	NUT, CAP (6MM)	9	..	..	..	..	..	..	A	.....		KM002778	1	90201-415-000
		9	..	..	..	..	..	..	AC	.....		KM000075	1	90201-415-000
	NUT, CAP (6MM)	9	..	..	..	..	..	..	A	KM002779		.....	1	90215-GM0-000
		9	..	..	..	..	..	..	AC	KM000076		.....	1	90215-GM0-000
		..	0	..	..	..	..	..		.....		.....	1	90215-GM0-000
		..	..	4	..	..	..	..	A	.....		RM200947	1	90215-GM0-000
		..	..	4	..	..	..	..	AC	.....		RM202000	1	90215-GM0-000
	NUT, CAP (6MM)	9	..	..	..	..	..	..	A	KM002779		.....	1	90308-MT8-000
		9	..	..	..	..	..	..	AC	KM000076		.....	1	90308-MT8-000
		..	0	..	5	6	7	8		.....		.....	1	90308-MT8-000
		..	..	4	..	..	..	..	A	.....		.....	1	90308-MT8-000
		..	..	4	..	..	..	..	AC	.....		.....	1	90308-MT8-000
	NUT, CAP (6MM)	..	..	4	..	..	..	..	A	RM200948		.....	1	90201-428-900
		..	..	4	..	..	..	..	AC	RM202001		.....	1	90201-428-900
		..	..	..	5	6	7	8		.....		.....	1	90201-428-900

 © AMERICAN HONDA MOTOR CO. INC. 1997

CLUTCH MASTER CYLINDER

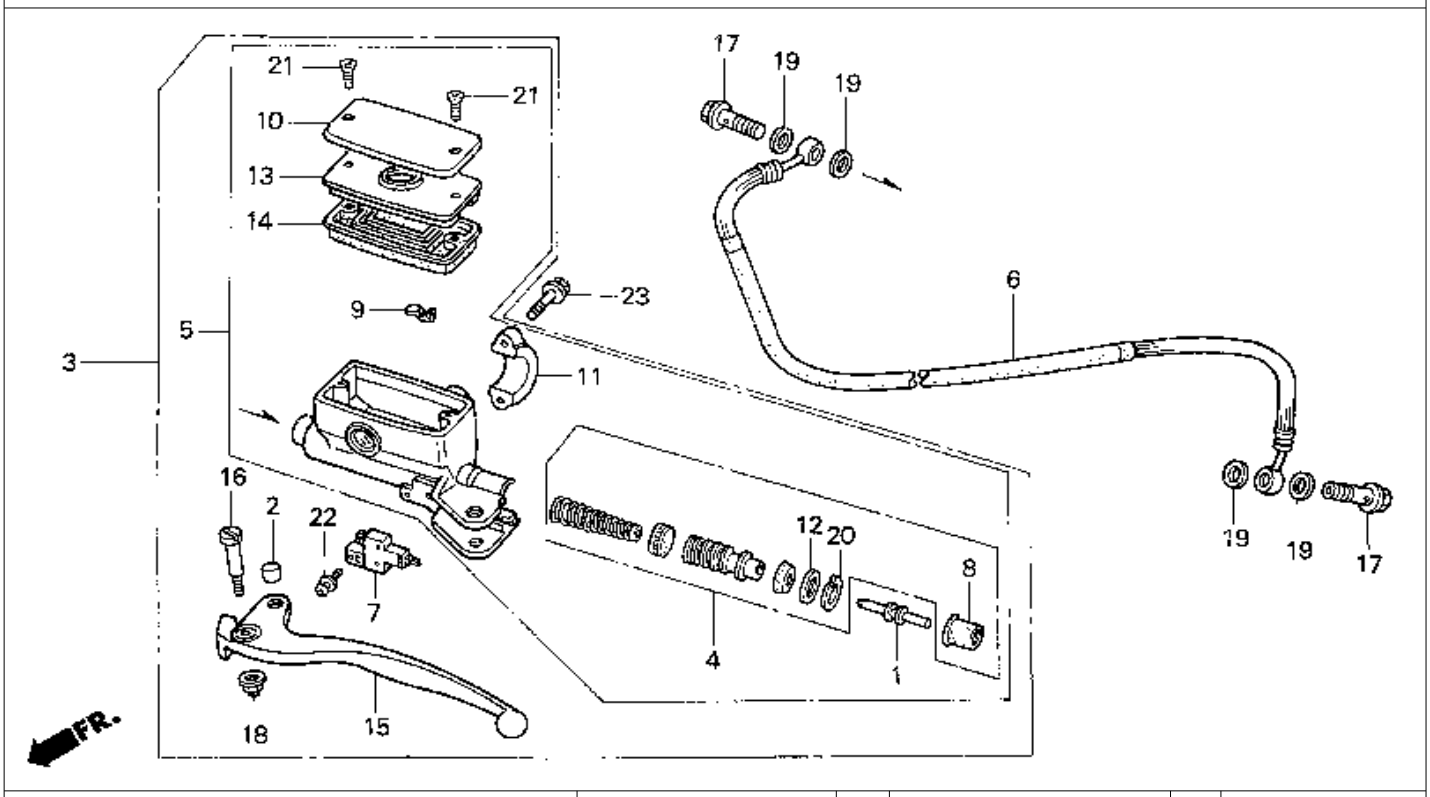

9 = PC800'89
0 = PC800'90
4 = PC800'94
5 = PC800'95
6 = PC800'96
7 = PC800'97
8 = PC800'98

Ref. No.	BLOCK NO. F-6 / DESCRIPTION	PC800 1989	1990	1994	1995	1996	1997	1998	AREA CODE	FRAME SERIAL NUMBER FROM		TO	QTY REQ	PART NUMBER
19	WASHER, OIL BOLT	9	0	4	5	6	7	8		.....		.....	4	90545-300-000
20	CIRCLIP (INNER) (18MM) (NISSIN)	9	0	4	5	6	7	8		.....		.....	1	90651-377-003
21	SCREW, FLAT (4X12)	9	0	4	5	6	7	8		.....		.....	2	93600-04012-0G
	SCREW, FLAT (4X12)	9	0	4	5	6	7	8		.....		.....	2	93600-04012-1G
22	SCREW-WASHER (4X12)	9	0	4	5	6	7	8		.....		.....	1	93893-04012-07
	SCREW-WASHER (4X12)	9	0	4	5	6	7	8		.....		.....	1	93893-04012-17
23	BOLT, FLANGE (6X25)	9	..	..	..	..	..	..		.....		.....	2	96001-06025-07
	BOLT, FLANGE (6X25)	..	0	4	5	6	7	8		.....		.....	2	96001-06022-07

 © AMERICAN HONDA MOTOR CO. INC. 1997

HANDLEBAR

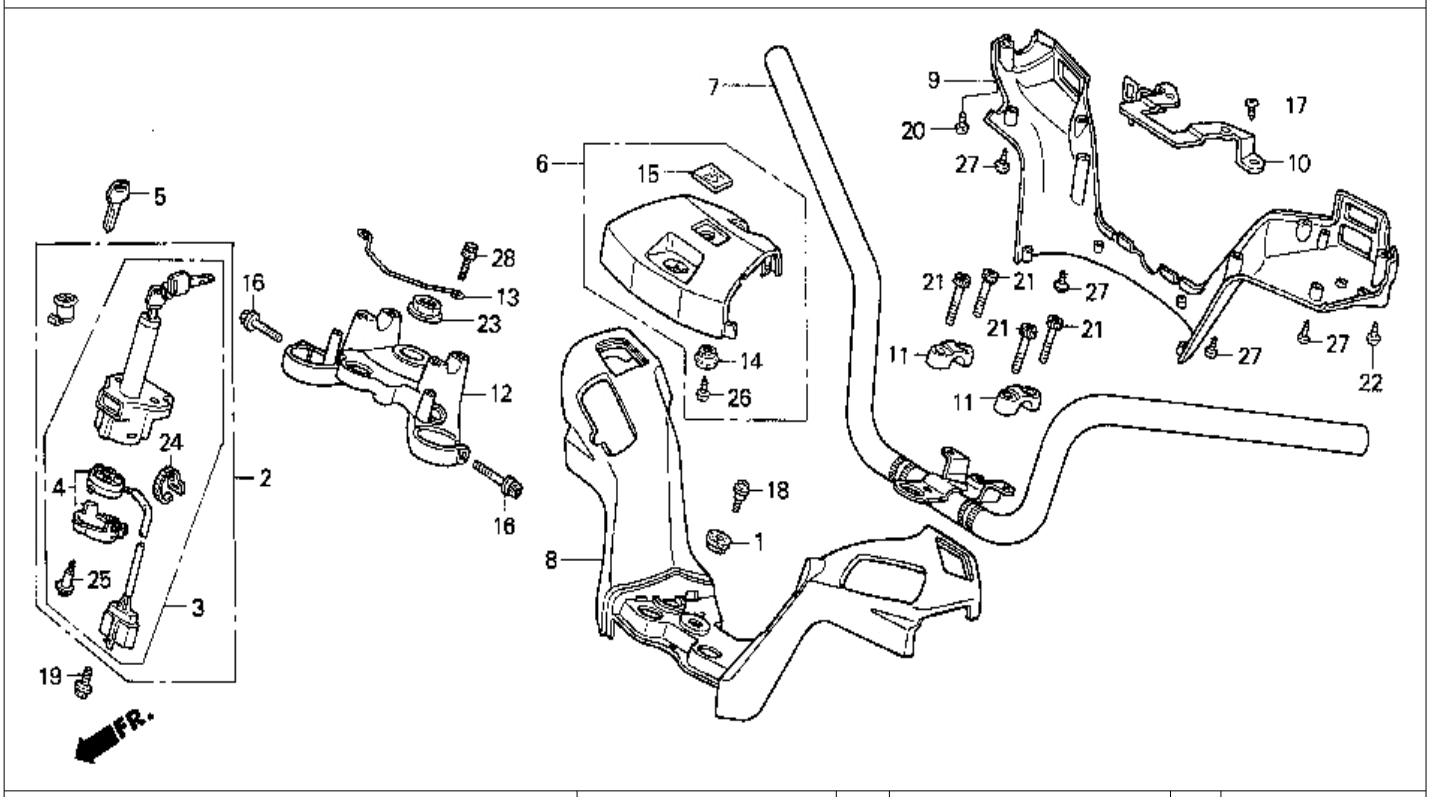

9 = PC800'89 6 = PC800'96
0 = PC800'90 7 = PC800'97
4 = PC800'94 8 = PC800'98
5 = PC800'95

Ref. No.	BLOCK NO. F-7 / DESCRIPTION	1989	1990	1994	1995	1996	1997	1998	AREA CODE	FRAME SERIAL FROM		FRAME NUMBER TO	QTY REQ	PART NUMBER
1	GROMMET B RR. COVER	9	0	4	5	6	7	8		.....		.....	1	11345-MB0-000
2	LOCK SET	9	..	..	..	..	..	..		.....		.....	1	35010-MR5-000
	LOCK SET	9	..	..	..	..	..	..		.....		.....	1	35010-MR5-010
	LOCK SET	..	0	..	..	..	..	..		.....		.....	1	35010-MR5-870
	LOCK SET	..	..	4	5	6	7	8		.....		.....	1	35010-MR5-871
3	SWITCH ASST., COMBINATION & LOCK.	9	..	..	..	..	..	..		.....		.....	1	35100-MR5-007
	SWITCH ASST., COMBINATION & LOCK.	9	..	..	..	..	..	..		.....		.....	1	35100-MR5-017
	SWITCH ASST., COMBINATION & LOCK.	..	0	..	..	..	..	..	A	.....		LM102065	1	35100-MR5-870
		..	0	..	..	..	..	..	AC	.....		.....	1	35100-MR5-870
	SWITCH ASST., COMBINATION & LOCK.	..	0	..	..	..	..	..	A	.....		.....	1	35100-MR5-871
		..	0	..	..	..	..	..	AC	.....		.....	1	35100-MR5-871
	SWITCH ASST., COMBINATION & LOCK.	..	0	..	..	..	..	..	A	.....		.....	1	35100-MR5-872
		..	0	..	..	..	..	..	AC	.....		.....	1	35100-MR5-872
		..	..	4	5	6	7	8		.....		.....	1	35100-MR5-872
4	BASE COMP., CONTACT	9	..	..	..	..	..	..		.....		.....	1	35101-MR5-007
	BASE COMP., CONTACT	..	0	..	..	..	..	..	A	.....		LM102065	1	35101-MR5-870
		..	0	..	..	..	..	..	AC	.....		.....	1	35101-MR5-870

 © AMERICAN HONDA MOTOR CO. INC. 1997

HANDLEBAR

Selection table for lock or blank key
Refer to the following selection table to select the lock or blank key.

Type	Key No.
TYPE 1	A•• , B••
TYPE 2	C•• , D••

•: 0, 1, 2, 3, 4, 5, 6, 7, 8 or 9

9 = PC800'89
0 = PC800'90
4 = PC800'94
5 = PC800'95
6 = PC800'96
7 = PC800'97
8 = PC800'98

Ref. No.	BLOCK NO. F-7 / DESCRIPTION	1989	1990	1994	1995	1996	1997	1998	AREA CODE	FRAME SERIAL NUMBER FROM		TO	QTY REQ	PART NUMBER
		PC800												
4	BASE COMP., CONTACT	..	0	..	..	..	..	..	A	LM102066		.....	1	35101-MR5-871
	BASE COMP., CONTACT	..	..	4	5	6	7	8		.....		.....	1	35101-MR5-872
5	KEY, BLANK (TYPE 1)	9	0	4	5	6	7	8		.....		.....	(1)	35121-KW3-771
	KEY, BLANK (TYPE 2)	9	0	4	5	6	7	8		.....		.....	(1)	35122-KW3-771
6	COVER COMP., HANDLE CENTER *NH252* (ATLANTIC GRAY)	9	0	4	5	..	..	..		.....		.....	1	53020-MR5-000ZA
	COVER COMP., HANDLE CENTER *NH105* (MAT BLACK)	..	..	..	..	6	..	..		.....		.....	1	53020-MR5-000ZB
	COVER COMP., HANDLE CENTER *NH1* (BLACK)	..	..	..	..	..	7	8		.....		.....	1	53020-MR5-A30ZA
7	HANDLEBAR	9	..	..	..	..	..	..		.....		.....	1	53100-MR5-000
	HANDLEBAR		0	4	5	6	7	8		.....		.....	1	53100-MR5-870
8	COVER, HANDLE (UPPER) *NH252* (ATLANTIC GRAY)	9	0	4	5	..	..	..		.....		.....	1	53110-MR5-000ZA
	COVER, HANDLE (UPPER) *NH105* (MAT BLACK)	..	..	..	..	6	..	..		.....		.....	1	53110-MR5-000ZB

 © AMERICAN HONDA MOTOR CO. INC. 1997

HANDLEBAR

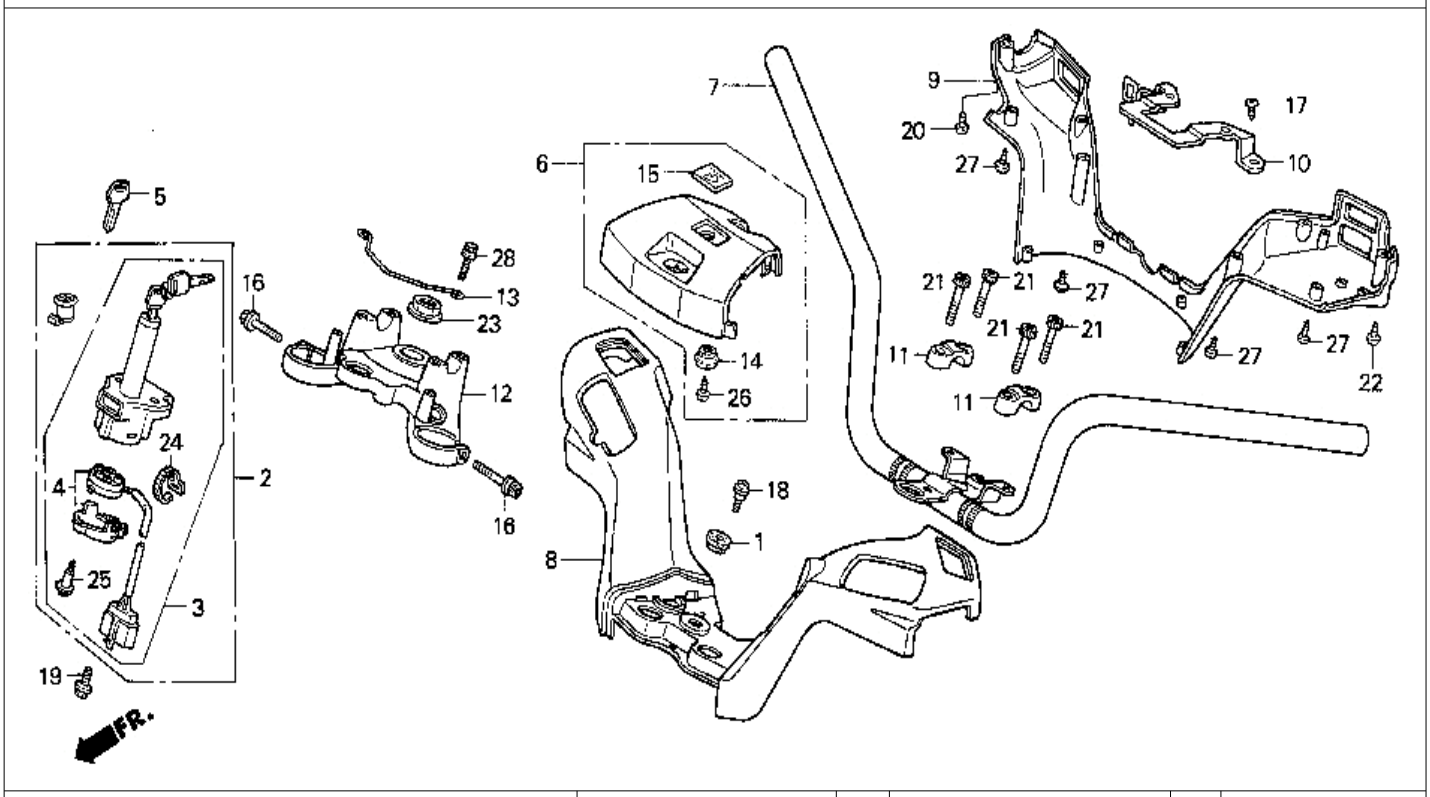

9 = PC800'89 6 = PC800'96
0 = PC800'90 7 = PC800'97
4 = PC800'94 8 = PC800'98
5 = PC800'95

Ref. No.	BLOCK NO. F-7 / DESCRIPTION	1989 99	1990 00	1994 04	1995 05	1996 06	1997 07	1998 08	AREA CODE	FRAME SERIAL NUMBER FROM	TO	QTY REQ	PART NUMBER
8	COVER, HANDLE (UPPER) *NH1* (BLACK)	..	..	..	..	..	7	8		.....	.....	1	53110-MR5-A30ZA
9	COVER, HANDLE (LOWER) *NH252* (ATLANTIC GRAY)	9	0	4	5	..	..	..		.....	.....	1	53115-MR5-000ZA
	COVER, HANDLE (LOWER) *NH252* (ATLANTIC GRAY)	9	0	4	5	..	..	..		.....	.....	1	53115-MR5-000ZA
	COVER, HANDLE (LOWER) *NH105* (MAT BLACK)	..	..	..	..	6	..	..		.....	.....	1	53115-MR5-000ZB
	COVER, HANDLE (LOWER) *NH1* (BLACK)	..	..	..	..	..	7	8		.....	.....	1	53115-MR5-A30ZA
10	STAY, HANDLE COVER (LOWER)	9	0	4	5	6	7	8		.....	.....	1	53117-MR5-000
11	HOLDER (UPPER)	9	0	4	5	6	7	8		.....	.....	2	53131-MR5-000
12	BRIDGE, FORK TOP	9	0	4	5	6	7	8		.....	.....	1	53230-MR5-000
13	GUIDE, HARNESS	9	0	4	5	6	7	8		.....	.....	1	64254-MR5-000
14	BOSS, SIDE COVER	9	0	4	5	6	7	8		.....	.....	1	83601-ML7-000
15	EMBLEM, WING MARK	9	0	4	5	6	7	8		.....	.....	1	86150-MR5-300
16	BOLT, FLANGE SOCKET (8X35)	9	0	4	5	6	7	8		.....	.....	2	90063-MK4-000

 © AMERICAN HONDA MOTOR CO. INC. 1997

HANDLEBAR

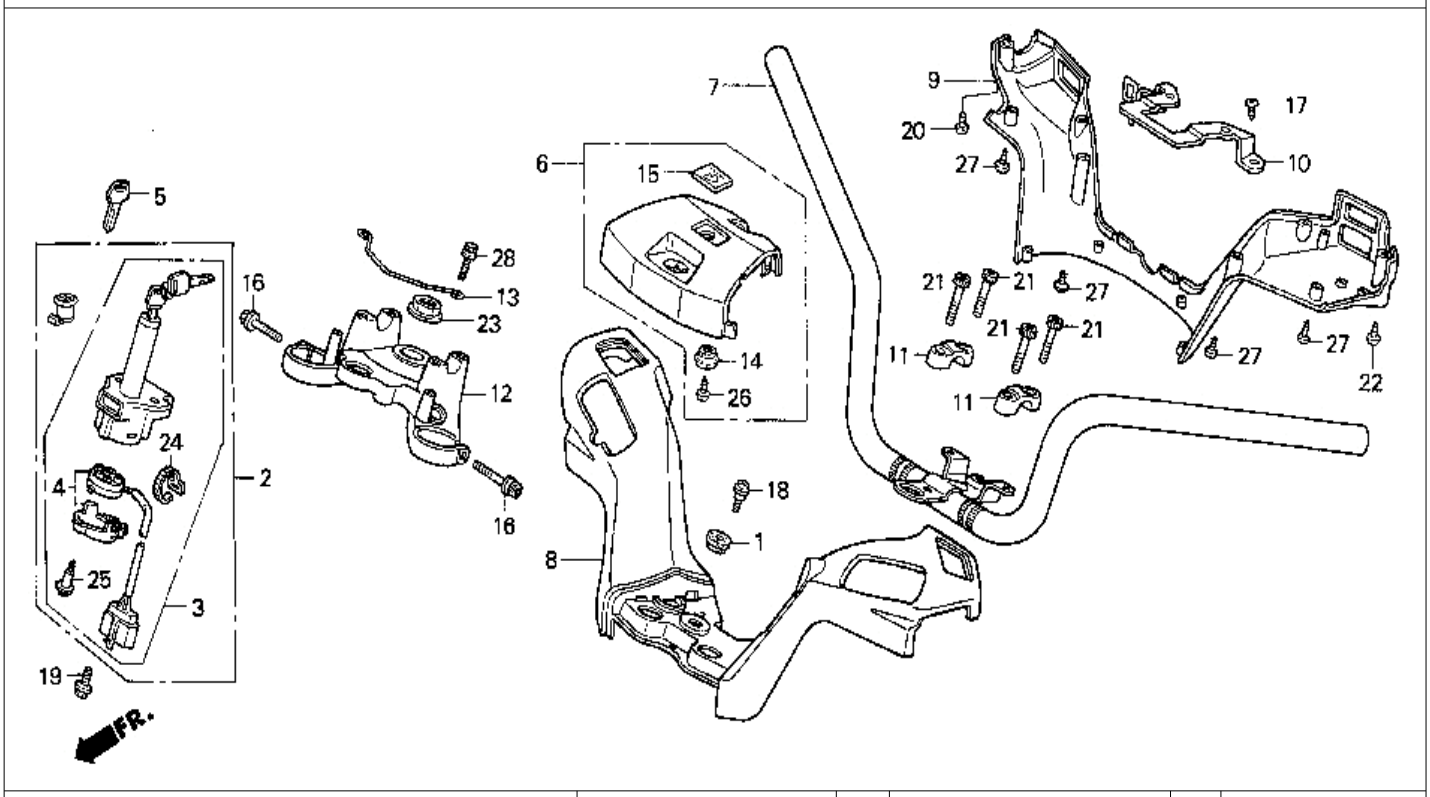

9 = PC800'89 6 = PC800'96
0 = PC800'90 7 = PC800'97
4 = PC800'94 8 = PC800'98
5 = PC800'95

Ref. No.	BLOCK NO. F-7 / DESCRIPTION	PC800 1989	1990	1994	1995	1996	1997	1998	AREA CODE	FRAME SERIAL NUMBER FROM	TO	QTY REQ	PART NUMBER
17	SCREW, TAPPING (4X12)	9	0	4	5	6	7	8		.....	.....	2	90101-SA4-000
	SCREW, TAPPING (4X16)	9	0	4	5	6	7	8		.....	.....	2	93913-14280
18	SCREW, HEADLIGHT SETTING	9	0	4	5	6	7	8		.....	.....	3	90102-GB4-000
19	BOLT, FLANGE (8X19)	9	0	4	5	6	7	8		.....	.....	2	90104-MJ1-000
20	SCREW, TAPPING (4X40)	9	0	4	5	6	7	8		.....	.....	1	90105-KB7-910
21	BOLT, SOCKET (8X34)	9	0	4	5	6	7	8		.....	.....	4	90112-MB0-000
22	SCREW, TAPPING (4X60)	9	0	4	5	6	7	8		.....	.....	1	90147-443-000
23	NUT, STEERING STEM	9	0	4	5	6	7	8		.....	.....	1	90304-MK3-000
24	BAND, SELF-LOCK	9	0	4	5	6	7	8		.....	.....	1	91058-MG9-681
25	SCREW, TAPPING (3X16)	9	0	4	..	..	..	..		.....	.....	3	91059-MK4-601
	SCREW, TAPPING (3X16)	..	..	..	5	6	7	8		.....	.....	3	90159-KY2-711
26	SCREW, TAPPING (4X12)	9	0	4	5	6	7	8		.....	.....	1	93901-24320
27	SCREW, TAPPING (4X16)	9	0	4	5	6	7	8		.....	.....	4	93901-24480
28	BOLT, FLANGE (6X12)	9	0	..	..	..	..	..		.....	.....	2	95801-06012-08
	BOLT, FLANGE (6X12)	9	0	4	5	6	7	8		.....	.....	2	95701-06012-08

 © AMERICAN HONDA MOTOR CO. INC. 1997

STEERING STEM

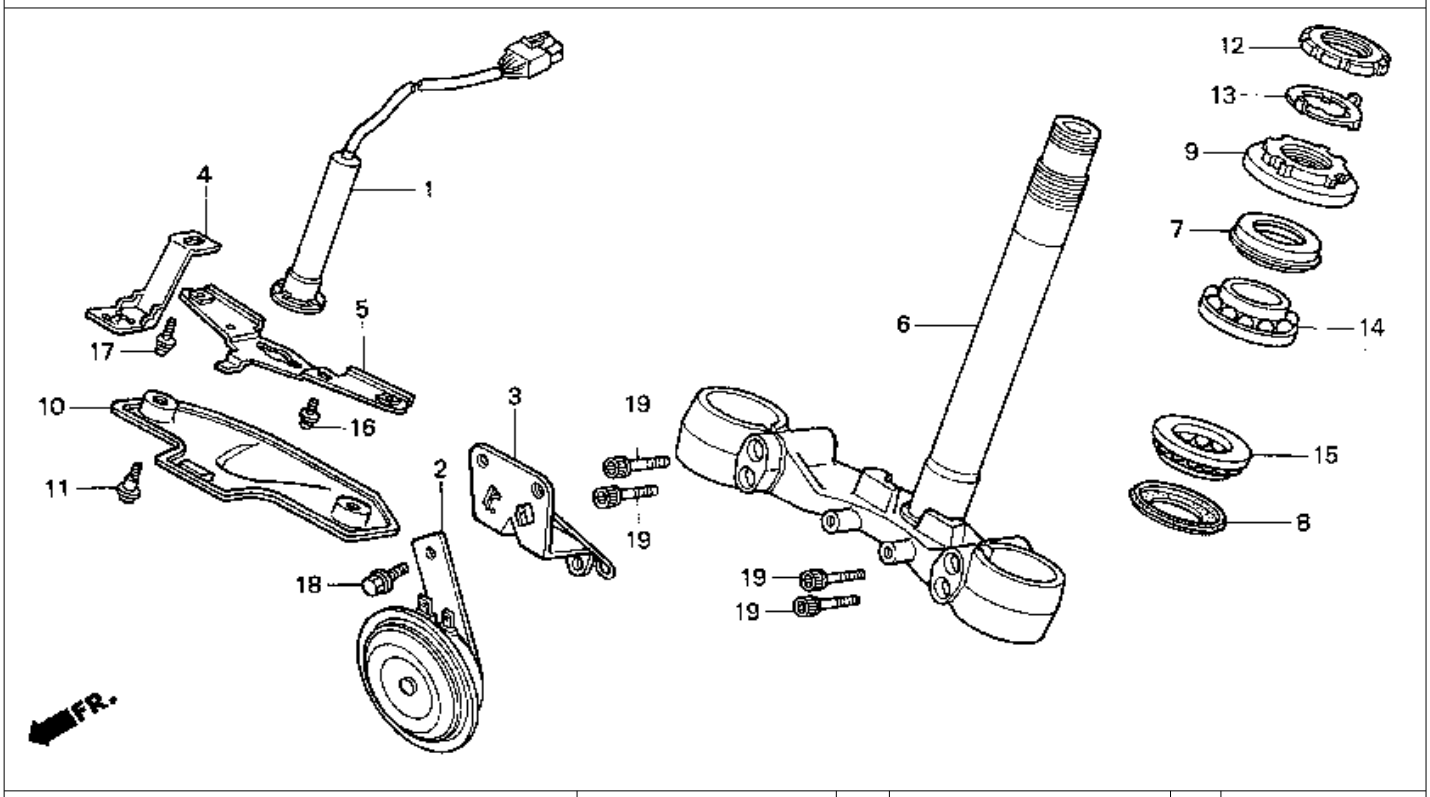

9 = PC800'89 6 = PC800'96
0 = PC800'90 7 = PC800'97
4 = PC800'94 8 = PC800'98
5 = PC800'95

Ref. No.	BLOCK NO. F-8 / DESCRIPTION	1998	1999	1999	1999	1999	1999	1999	AREA CODE	FRAME SERIAL FROM		FRAME NUMBER TO	QTY REQ	PART NUMBER
		PC800												
1	CANCEL UNIT, TURN SIGNAL	9	0	4	5	6	..	..		.....		.....	1	35220-MR5-003
2	HORN COMP. (HIGH)	9	..	..	..	..	..	..		.....		.....	1	38110-MR5-671
	HORN COMP. (HIGH)	9	..	4	5	6	7	8		.....		.....	1	38110-MR5-871
		..	0	..	..	..	..	..	A	.....		.....	1	38110-MR5-871
		..	0	..	..	..	..	..	AC	.....		.....	1	38110-MR5-871
	HORN COMP. (HIGH)	..	0	..	..	..	..	..	A	.....		LM102065	1	38110-MR5-870
		..	0	..	..	..	..	..	AC	.....		.....	1	38110-MR5-870
3	STAY, HORN	9	0	4	5	6	7	8		.....		.....	1	38115-MR5-000
4	SUPPORT, SENSOR	9	..	..	..	..	..	..	A	.....		KM002898	1	50231-MR5-000
		9	..	..	..	..	..	..	AC	.....		KM000730	1	50231-MR5-000
	SUPPORT, SENSOR	9	..	..	..	..	..	..	A	KM002899		.....	1	50231-MR5-010
		9	..	..	..	..	..	..	AC	KM000731		.....	1	50231-MR5-010
		..	0	4	5	6	..	..		.....		.....	1	50231-MR5-010
5	PLATE, TURN INDICATOR UNIT CANCEL UNIT	9	0	4	5	6	..	..		.....		.....	1	51409-MR5-000
6	STEM, COMP., STEERING	9	0	4	5	6	..	..		.....		.....	1	53200-MR5-000
	STEM, COMP., STEERING	..	..	..	..	..	7	8		.....		.....	1	53200-MR5-A30
7	DUST SEAL, STEERING HEAD	9	0	4	5	6	7	8		.....		.....	1	53213-MB4-771

 © AMERICAN HONDA MOTOR CO. INC. 1997

STEERING STEM

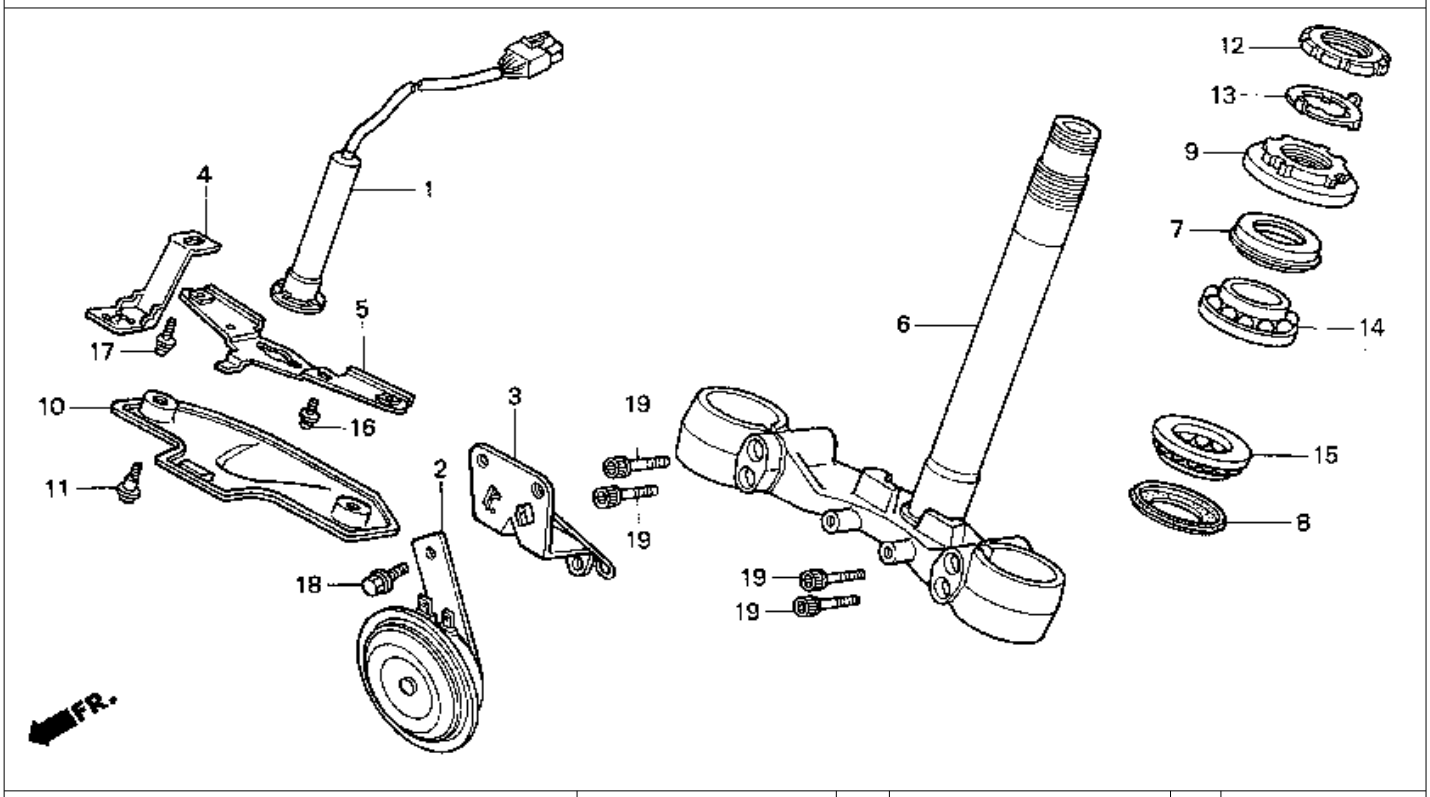

9 = PC800'89 6 = PC800'96
0 = PC800'90 7 = PC800'97
4 = PC800'94 8 = PC800'98
5 = PC800'95

Ref. No.	BLOCK NO. F-8 / DESCRIPTION	PC800 1998	1999	1999	1999	1999	1999	1998	AREA CODE	FRAME SERIAL NUMBER FROM		TO	QTY REQ	PART NUMBER
8	DUST SEAL, STEERING HEAD	9	0	4	5	6	7	8		.....		.....	1	53214-371-010
9	THREAD COMP., STEERING HEAD (UPPER)	9	0	4	5	6	7	8		.....		.....	1	53220-422-000
10	PROTECTOR, WIND	9	0	4	5	6	..	..		.....		.....	1	61403-MR5-000
11	SCREW, SPECIAL (5X12)	9	0	4	5	6	..	8		.....		.....	2	90105-MB1-000
12	THREAD, STEERING HEAD TOP (B)	9	0	4	5	6	7	8		.....		.....	1	90302-425-830
13	WASHER, LOCK	9	0	4	5	6	7	8		.....		.....	1	90506-425-830
14	BEARING, HEAD PIPE (UPPER)	9	0	4	5	6	7	8		.....		.....	1	90105-KT8-005
15	BEARING, HEAD PIPE (LOWER)	9	0	4	5	6	7	8		.....		.....	1	91016-KT8-005
16	SCREW-WASHER (5X8)	9	0	4	5	6	..	..		.....		.....	2	93891-05008-07
17	SCREW-WASHER (5X12)	9	0	4	5	6	..	..		.....		.....	1	93894-05012-07
18	BOLT, FLANGE (8X12)	9	0	4	5	6	7	8		.....		.....	1	95701-08012-07
19	BOLT, FLANGE (8X32)	9	0	4	5	6	7	8		.....		.....	4	96700-08032-17

 © AMERICAN HONDA MOTOR CO. INC. 1997

FRONT FENDER – 89-96

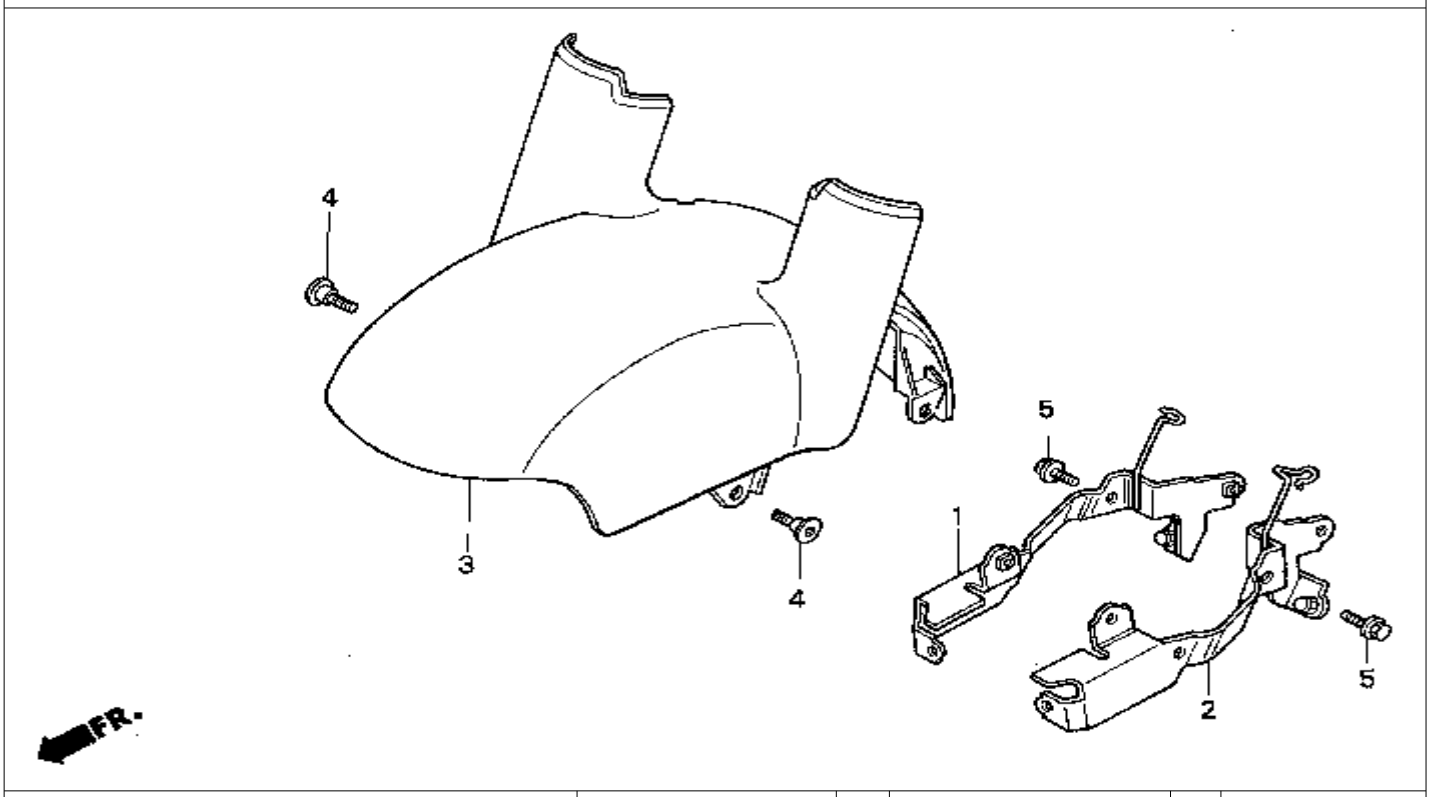

9 = PC800'89 6 = PC800'96
0 = PC800'90 7 = PC800'97
4 = PC800'94 8 = PC800'98
5 = PC800'95

Ref. No.	BLOCK NO. F-9 / DESCRIPTION	PC800 1989	1990	1994	1995	1996	1997	1998	AREA CODE	FRAME SERIAL NUMBER FROM		TO	QTY REQ	PART NUMBER
1	STAY, R. FR. FENDER	9	0	4	5	6	..	..		.....		.....	1	61101-MR5-000
2	STAY, L. FR. FENDER	9	0	4	5	6	..	..		.....		.....	1	61102-MR5-000
3	FENDER A, FR. *NH251P*													
	(PACIFIC WHITE)	9	..	..	..	..	..	..		.....		.....	1	61105-MR5-000ZA
	FENDER A, FR. *R101CU*													
	(CANDY GLORY RED)	..	0	..	..	..	..	..		.....		.....	1	61105-MR5-000ZC
	FENDER A, FR. *NH1Z*													
	(BLACK-Z)	..	..	4	5	..	..	..		.....		.....	1	61105-MR5-000ZE
	FENDER A, FR. *R201*													
	(MAGNA RED)	..	..	..	..	6	..	..		.....		.....	1	61105-MR5-000ZF
4	SCREW, PAN (6X14)	9	0	4	5	6	..	..		.....		.....	4	90106-MM4-000
5	BOLT, FLANGE (6X12)	9	0	4	5	6	..	..		.....		.....	4	95701-06012-08

 © AMERICAN HONDA MOTOR CO. INC. 1997

FRONT FENDER – 97-98

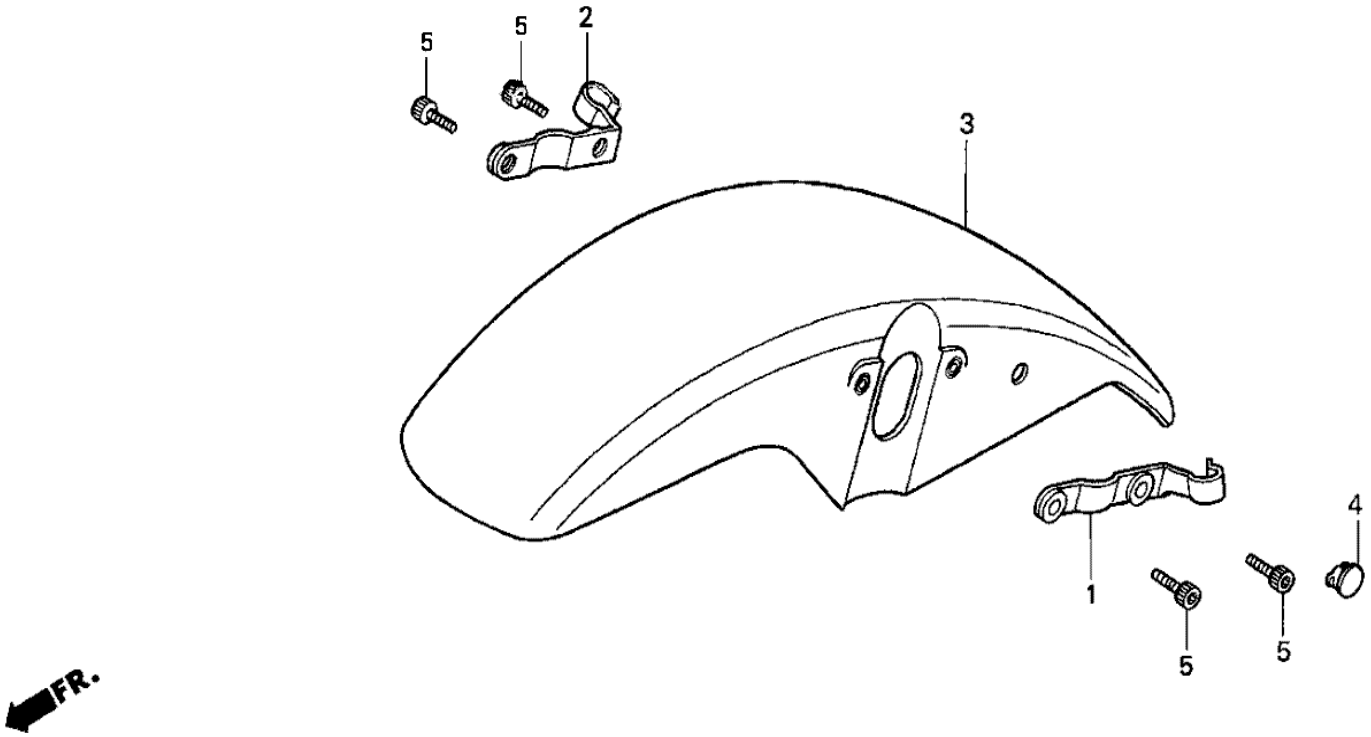

9 = PC800'89 6 = PC800'96
0 = PC800'90 7 = PC800'97
4 = PC800'94 8 = PC800'98
5 = PC800'95

BLOCK NO. F-9-1

Ref. No.	DESCRIPTION	1989	1990	1994	1995	1996	1997	1998	AREA CODE	FRAME SERIAL NUMBER FROM	TO	QTY REQ	PART NUMBER
		PC800											
1	CLAMP, R. FR. BRAKE HOSE	..	..	..	..	..	7	8		.....	.....	1	45156-MR5-A30
2	CLAMP, L. FR. BRAKE HOSE	..	..	..	..	..	7	8		.....	.....	1	45157-MR5-A30
3	FENDER COMP., FR. *R201* (MAGNA RED)	..	..	..	..	..	7	8		.....	.....	1	61100-MZ5-000ZE
4	PLUG, HOLE *NH105* (MAT BLACK)	..	..	..	..	..	7	8		.....	.....	1	90656-KM1-000ZH
5	BOLT, FLANGE (6X20)	..	..	..	..	..	7	8		.....	.....	4	96600-06020-00

 © AMERICAN HONDA MOTOR CO. INC. 1997

FRONT FORK

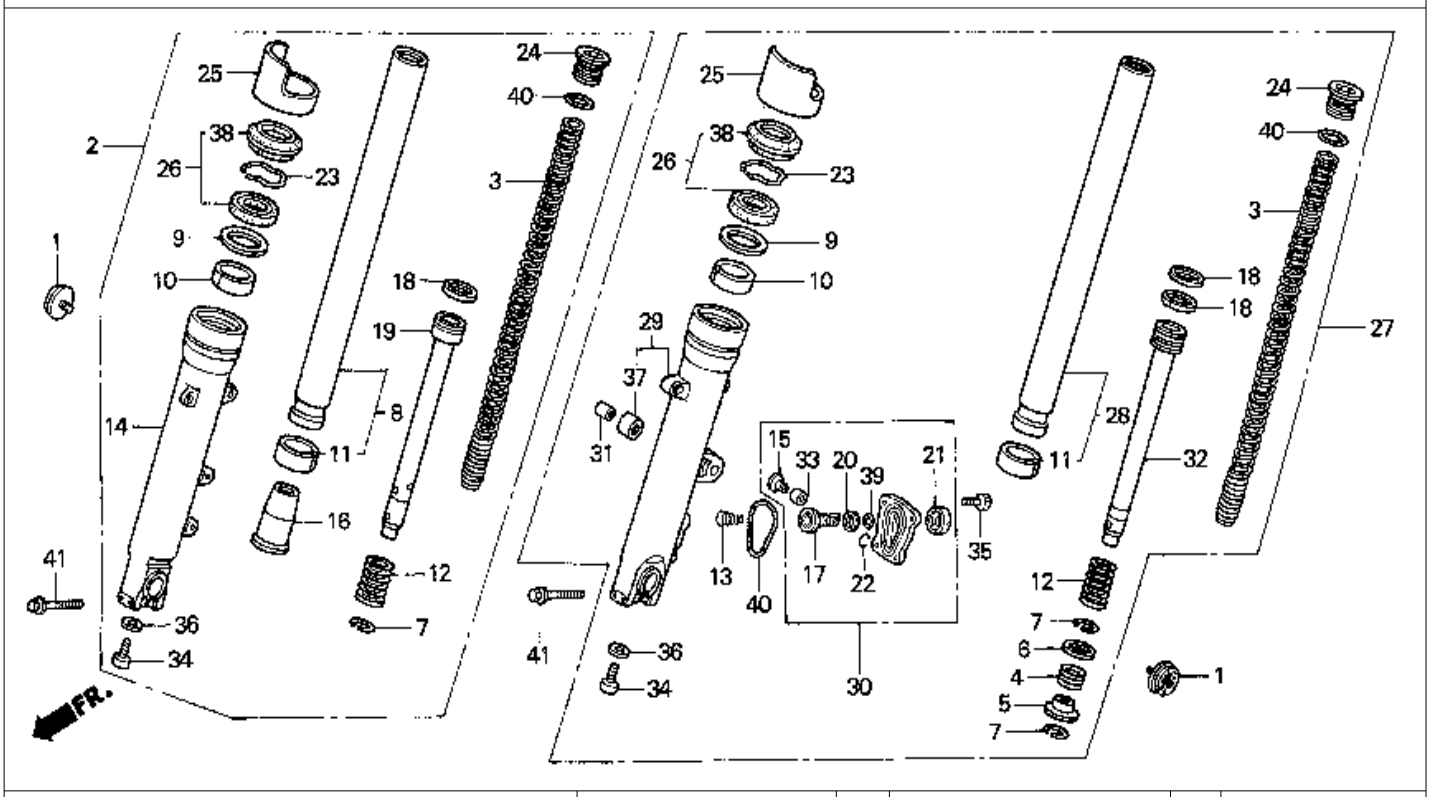

9 = PC800'89 6 = PC800'96
0 = PC800'90 7 = PC800'97
4 = PC800'94 8 = PC800'98
5 = PC800'95

Ref. No.	BLOCK NO. F-10 / DESCRIPTION	PC800 1989	1990	1994	1995	1996	1997	1998	AREA CODE	FRAME SERIAL FROM		FRAME NUMBER TO	QTY REQ	PART NUMBER
1	REFLECTOR, FR. REFLEX	..	..	..	..	..	7	8		.....		.....	2	33742-HB9-641
2	FORK ASSY., R. FR.	9	0	4	5	6	..	..		.....		.....	1	51400-MR5-003
	FORK ASSY., R. FR.	..	..	..	..	..	7	8		.....		.....	1	51400-MR5-A31
3	SPRING, FR. (SHOWA)	9	0	4	5	6	7	8		.....		.....	2	51401-MR5-003
4	SPRING, OIL LOCK	9	0	4	5	6	7	8		.....		.....	1	51402-MB7-611
5	VALVE, OIL LOCK	9	0	4	5	6	7	8		.....		.....	1	51403-MB7-611
6	SEAT, SPRING	9	0	4	5	6	7	8		.....		.....	1	51404-MB7-611
7	RING, STOPPER	9	0	4	5	6	7	8		.....		.....	3	51405-MB7-611
8	PIPE COMP., R. FR. FORK (SHOWA)	9	0	4	5	6	7	8		.....		.....	1	51410-MR5-003
9	RING, BACK-UP	9	0	4	5	6	7	8		.....		.....	2	51412-MB4-003
10	BUSH, GUIDE (SHOWA)	9	0	4	5	6	7	8		.....		.....	2	51414-MN5-003
11	BUSH, SLIDER (SHOWA)	9	0	4	5	6	7	8		.....		.....	2	51415-MM8-003
12	SPRING, FR. REBOUND	9	0	4	5	6	7	8		.....		.....	2	51416-KF0-003
13	SPRING, PISTON	9	0	4	5	6	..	..		.....		.....	1	51418-ML7-003
	SPRING, PISTON	..	..	..	..	..	7	8		.....		.....	1	51418-MAJ-G41
14	CASE COMP., R. (LOWER)	9	0	4	5	6	..	..		.....		.....	1	51421-MR5-003

 © AMERICAN HONDA MOTOR CO. INC. 1997

FRONT FORK

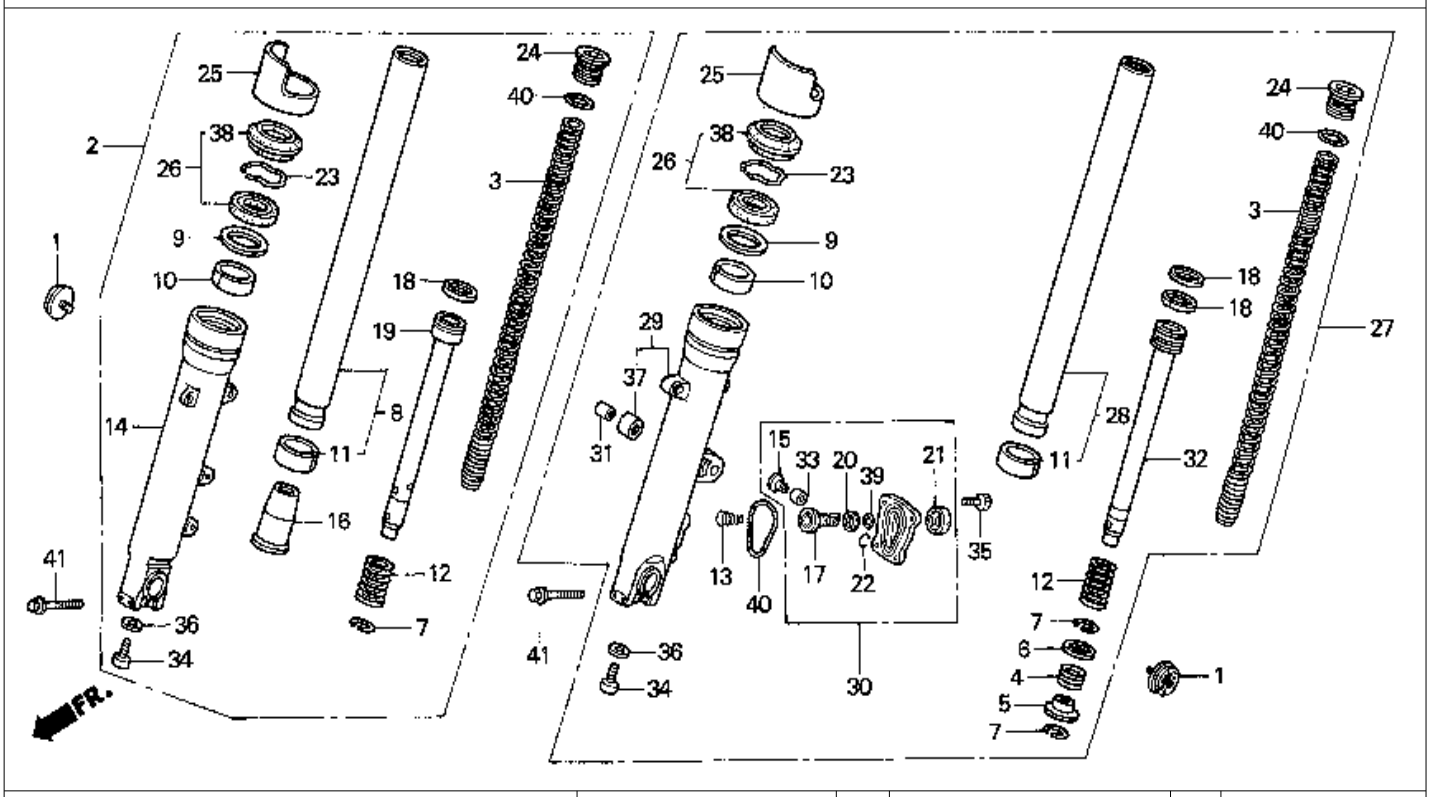

9 = PC800'89	6 = PC800'96
0 = PC800'90	7 = PC800'97
4 = PC800'94	8 = PC800'98
5 = PC800'95	

Ref. No.	BLOCK NO. F-10 / DESCRIPTION	PC800 1989	1990	1994	1995	1996	1997	1998	AREA CODE	FRAME SERIAL NUMBER FROM		TO	QTY REQ	PART NUMBER
14	CASE, R. (LOWER)	..	..	..	..	..	7	8		.....		.....	1	51420-MR5-A31
15	COLLAR, PISTON	9	0	4	5	6	7	8		.....		.....	1	51423-MJ0-003
16	PIECE, OIL LOCK (SHOWA)	9	0	4	5	6	7	8		.....		.....	1	51432-MM5-003
17	PISTON COMP.	9	0	4	5	6	7	8		.....		.....	1	51436-ML7-003
18	RING, PISTON (SHOWA)	9	0	4	5	6	7	8		.....		.....	3	51437-MM5-003
19	PIPE, R. SEAT (SHOWA)	9	0	4	5	6	7	8		.....		.....	1	51440-MR5-003
20	RUBBER, STOPPER	9	0	..	..	..	..	..		.....		.....	1	51441-ML7-003
	RUBBER, STOPPER	..	..	4	5	6	7	8		.....		.....	1	51441-ML7-013
21	BOOT, PISTON CASE	9	0	4	5	6	7	8		.....		.....	1	51442-MJ0-003
22	RING, STOPPER	9	0	4	5	6	7	8		.....		.....	1	51445-MJ0-003
23	RING, OIL SEAL STOPPER	9	0	4	5	6	7	8		.....		.....	2	51447-KA4-711
24	BOLT, FR. FORK (SHOWA)	9	0	4	5	6	..	..		.....		.....	2	51455-MN5-003
	BOLT, L. FR. FORK	..	..	..	..	..	7	8		.....		.....	2	51445-MT3-611
25	PROTECTOR, FORK PIPE	..	..	..	..	..	7	8		.....		.....	2	51460-MT3-611
26	SEAL SET, FR. FORK (SHOWA)	9	0	4	5	6	7	8		.....		.....	2	51490-MN8-305
27	FORK ASSY., L. FR.	9	0	..	..	..	..	..		.....		.....	1	51500-MR5-003

 © AMERICAN HONDA MOTOR CO. INC. 1997

FRONT FORK

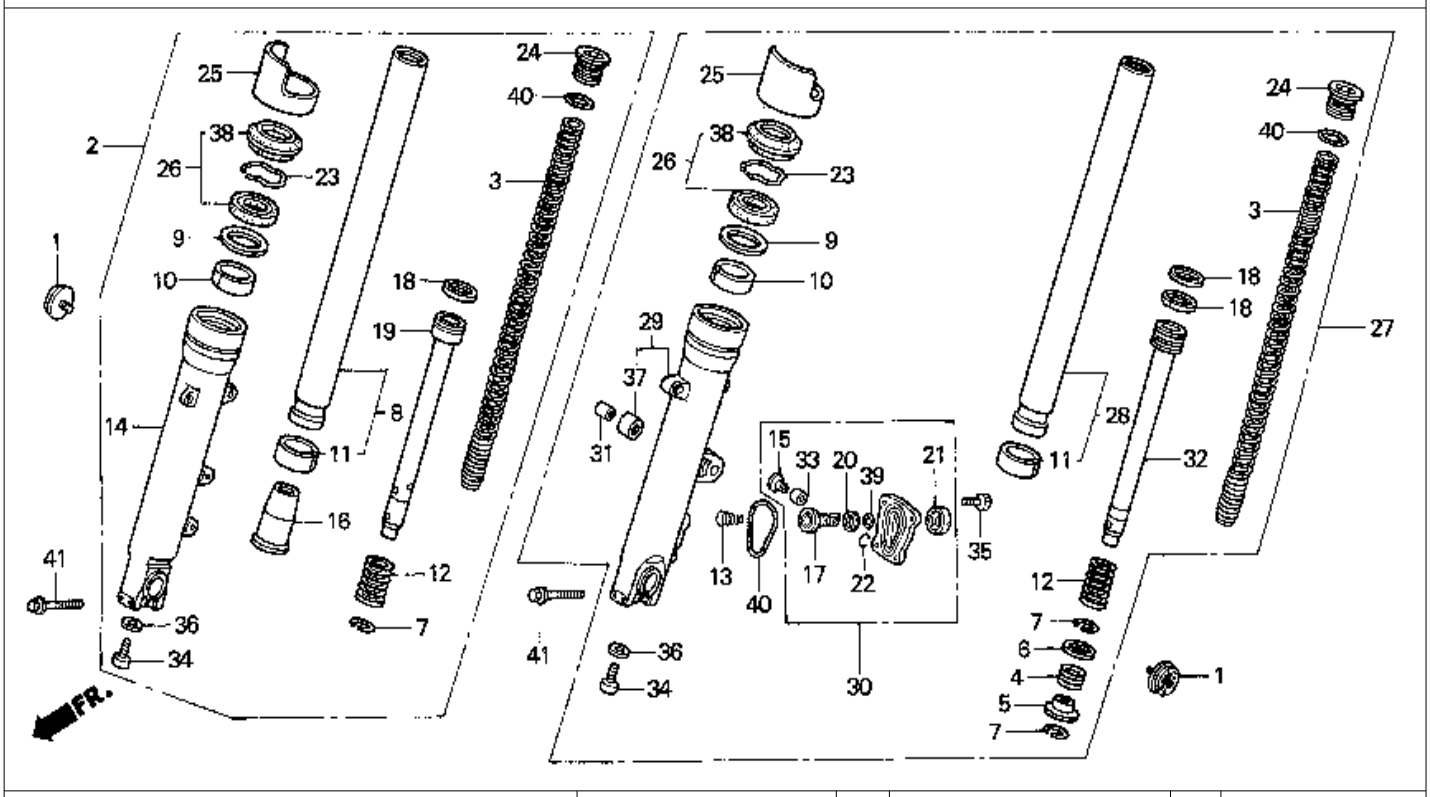

9 = PC800'89 6 = PC800'96
0 = PC800'90 7 = PC800'97
4 = PC800'94 8 = PC800'98
5 = PC800'95

Ref. No.	BLOCK NO. F-10 / DESCRIPTION	PC800 1989	1990	1994	1995	1996	1997	1998	AREA CODE	FRAME SERIAL FROM		FRAME NUMBER TO	QTY REQ	PART NUMBER
27	FORK ASSY., L. FR.	9	0	4	5	6	..	..		.....		.....	1	51500-MR5-013
	FORK ASSY., L. FR.	..	..	..	..	..	7	8		.....		.....	1	51500-MR5-A31
28	PIPE COMP., L. FR. FORK (SHOWA)	9	0	4	5	6	7	8		.....		.....	1	51510-MR5-003
29	CASE COMP., L. (LOWER)	9	0	4	5	6	..	..		.....		.....	1	51521-MR5-003
	CASE COMP., L. (LOWER)	..	..	..	..	..	7	8		.....		.....	1	51520-MR5-A31
30	CASE COMP., PISTON (SHOWA)	9	0	..	..	..	..	..		.....		.....	1	51530-MR5-003
	CASE COMP., PISTON (SHOWA)	..	..	4	5	6	7	..		.....		.....	1	51530-MR5-013
	CASE COMP., PISTON	..	..	..	..	..	..	8		.....		.....	1	51530-MR5-A31
31	COLLAR, L. FR. CALIPER BRACKET	9	0	4	5	6	7	8		.....		.....	1	51536-ML7-000
32	PIPE, L. SEAT (SHOWA)	9	0	4	5	6	7	8		.....		.....	1	51540-MR5-003
33	BUSH, RUBBER	9	0	4	5	6	7	8		.....		.....	1	51545-MJ0-003
34	BOLT, SOCKET (8MM) (SHOWA)	9	0	4	5	6	7	8		.....		.....	2	90116-KV3-701
35	BOLT, SOCKET (5X13.5)	9	0	4	5	6	7	8		.....		.....	4	90166-ML7-003
36	WASHER, SPECIAL (8MM)	9	0	4	5	6	7	8		.....		.....	2	90544-283-000
37	BEARING, NEEDLE (1422)	9	0	4	5	6	7	8		.....		.....	1	91071-ML7-003
38	DUST SEAL	9	0	4	5	6	7	8		.....		.....	2	91254-MM8-003

 © AMERICAN HONDA MOTOR CO. INC. 1997 F2

PAGE 75 CONTINUED

FRONT FORK

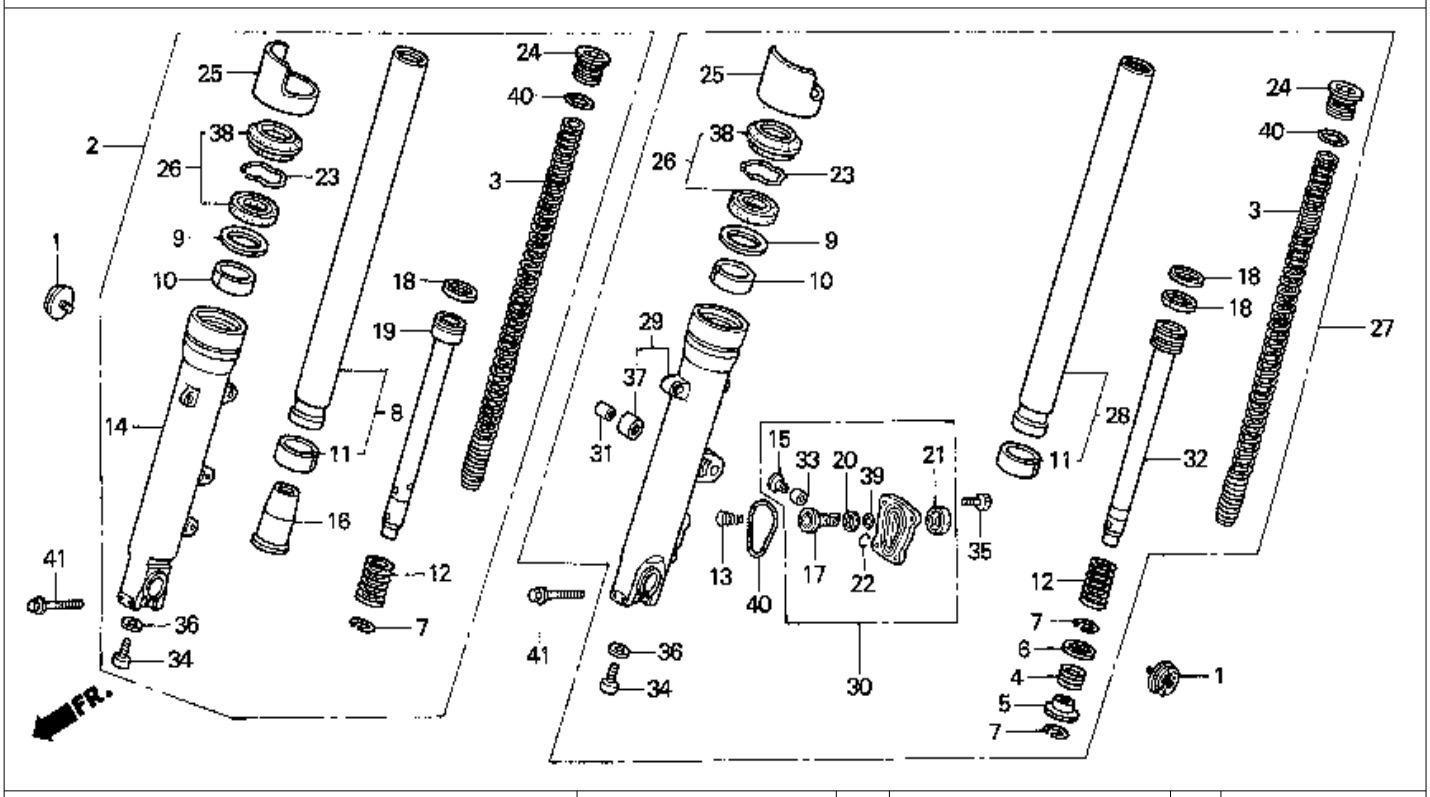

9 = PC800'89
0 = PC800'90
4 = PC800'94
5 = PC800'95
6 = PC800'96
7 = PC800'97
8 = PC800'98

Ref. No.	BLOCK NO. F-10 / DESCRIPTION	1989	1990	1994	1995	1996	1997	1998	AREA CODE	FRAME SERIAL NUMBER FROM	TO	QTY REQ	PART NUMBER
39	O-RING	9	0	4	5	6	7	8		.....	.....	1	91304-ML7-003
40	O-RING (SHOWA)	9	0	4	5	6	7	8		.....	.....	3	91356-KF0-003
41	BOLT, FLANGE (8X45)	9	0	4	5	6	..	..		.....	.....	4	96400-08045-08
	BOLT, FLANGE (8X45)	..	..	..	..	..	7	8		.....	.....	4	90109-MR7-000

 © AMERICAN HONDA MOTOR CO. INC. 1997

FRONT BRAKE CALIPER

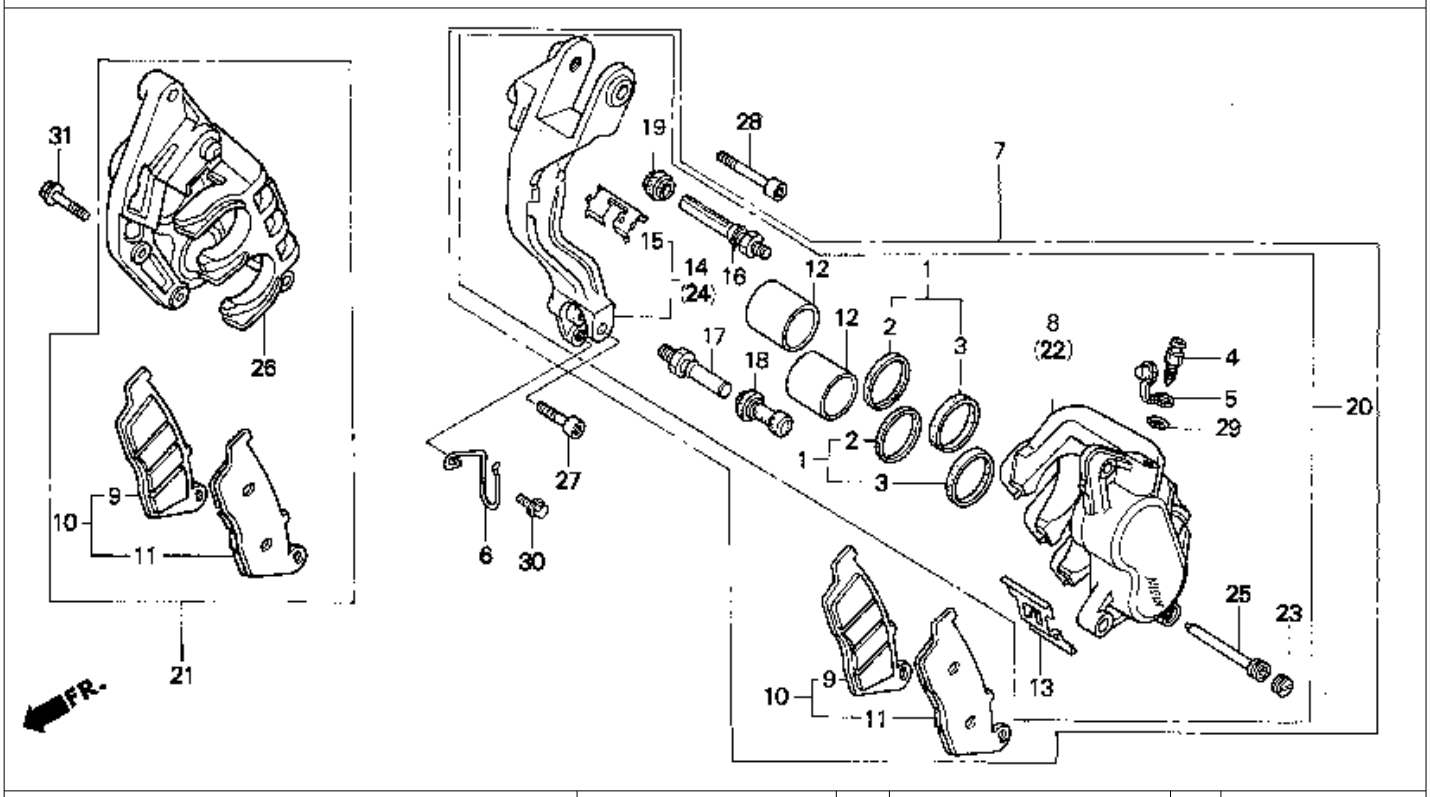

9 = PC800'89 6 = PC800'96
0 = PC800'90 7 = PC800'97
4 = PC800'94 8 = PC800'98
5 = PC800'95

Ref. No.	BLOCK NO. F-11 DESCRIPTION	1998 99	1990	1994	1995	1996	1997	1998	AREA CODE	FRAME SERIAL FROM		NUMBER TO	QTY REQ	PART NUMBER
1	SEAL SET, PISTON	..	..	4	5	6	7	8		.....		.....	4	06431-MA3-405
2	DUST SEAL	9	0	..	..	..	..	..		.....		.....	4	43109-MA3-006
3	SEAL, PISTON	9	0	..	..	..	..	..		.....		.....	4	43209-MA3-006
4	SCREW, BLEEDER	9	0	4	5	..	..	..		.....		.....	2	43352-MG9-006
	SCREW, BLEEDER	..	..	..	..	6	7	8		.....		.....	2	43352-568-003
5	CAP, BLEEDER SCREW	9	0	4	5	..	..	..		.....		.....	2	43353-MG9-006
	CAP, BLEEDER SCREW	9	0	4	5	..	..	..		.....		.....	2	43353-443-761
	CAP, BLEEDER SCREW	9	0	4	5	6	7	8		.....		.....	2	43353-461-771
6	CLAMP, SPEEDOMETER CABLE	9	0	4	5	6	..	..		.....		.....	1	44832-MR5-000
7	CALIPER ASSY., L. FR. (NISSIN)	9	..	..	..	..	..	..	A	.....		.....	1	45100-MR5-008
		9	..	..	..	..	..	..	AC	.....		.....	1	45100-MR5-008
	CALIPER ASSY., L. FR. (NISSIN)	9	..	..	..	..	..	..	A	KM003209		.....	1	45100-MR5-018
		9	..	..	..	..	..	..	AC	KM000731		.....	1	45100-MR5-018
	CALIPER ASSY., L. FR. (NISSIN)	..	0	..	..	..	..	..		.....		.....	1	45100-MR5-871
8	BODY, L. FR. CALIPER (NISSIN)	9	0	..	..	..	..	..		.....		.....	1	45101-MR5-006
9	PAD COMP. A, FR.	9	0	..	..	..	..	..		.....		.....	2	45105-ML7-922

 © AMERICAN HONDA MOTOR CO. INC. 1997

FRONT BRAKE CALIPER

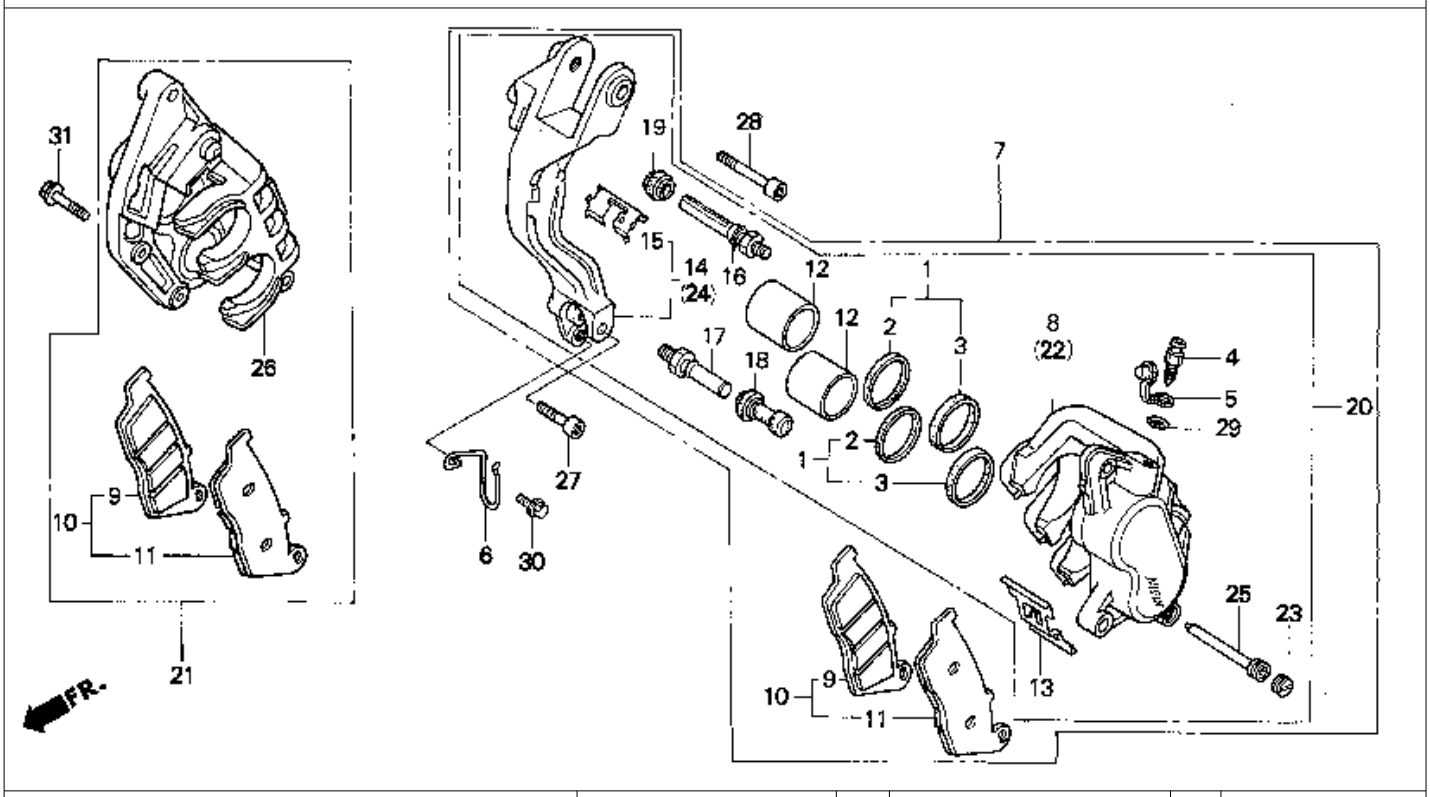

9 = PC800'89 6 = PC800'96
0 = PC800'90 7 = PC800'97
4 = PC800'94 8 = PC800'98
5 = PC800'95

Ref. No.	BLOCK NO. F-11 / DESCRIPTION	1989 / 99	1990 / 00	1994	1995	1996	1997	1998	AREA CODE	FRAME SERIAL NUMBER FROM	TO	QTY REQ	PART NUMBER
10	PAD SET, FR. BRAKE	..	..	4	5	6	7	8		.....	.....	2	45105-ML7-405
11	PAD COMP. B, FR.	9	0	..	..	..	..	..		.....	.....	2	45106-ML7-922
12	PISTON COMP.	9	..	..	..	..	..	..		.....	.....	4	45107-MN4-006
	PISTON COMP.	9	..	..	..	..	..	..		.....	.....	4	45107-MN4-016
	PISTON COMP. (NISSIN)	..	0	4	5	6	7	8		.....	.....	4	45107-ML4-006
13	SPRING, PAD (NISSIN)	9	0	..	..	..	..	..		.....	.....	2	45108-ML7-921
	SPRING, PAD (NISSIN)	9	0	4	5	6	7	8		.....	.....	2	45108-ML7-922
14	BRACKET COMP., L. FR. (NISSIN)	9	0	4	5	6	..	..		.....	.....	1	45110-MR5-006
	BRACKET COMP., L. FR.	..	..	..	..	..	7	8		.....	.....	1	45110-MR5-A31
15	RETAINER	9	0	4	5	6	7	8		.....	.....	2	45112-ML7-921
16	BOLT A, PIN (NISSIN)	9	0	4	5	6	7	8		.....	.....	2	45131-ML7-921
17	BOLT, PIN	9	0	4	5	6	7	8		.....	.....	2	45131-166-016
18	BUSH, PIN	9	0	4	5	6	7	8		.....	.....	2	45132-166-016
19	BOOT (B)	9	0	4	5	6	7	8		.....	.....	2	45133-MA3-006
20	CALIPER SUB-ASSY., L. FR. BRAKE (NISSIN)	..	..	4	5	..	..	..		.....	.....	1	45150-MR5-305

 © AMERICAN HONDA MOTOR CO. INC. 1997

FRONT BRAKE CALIPER

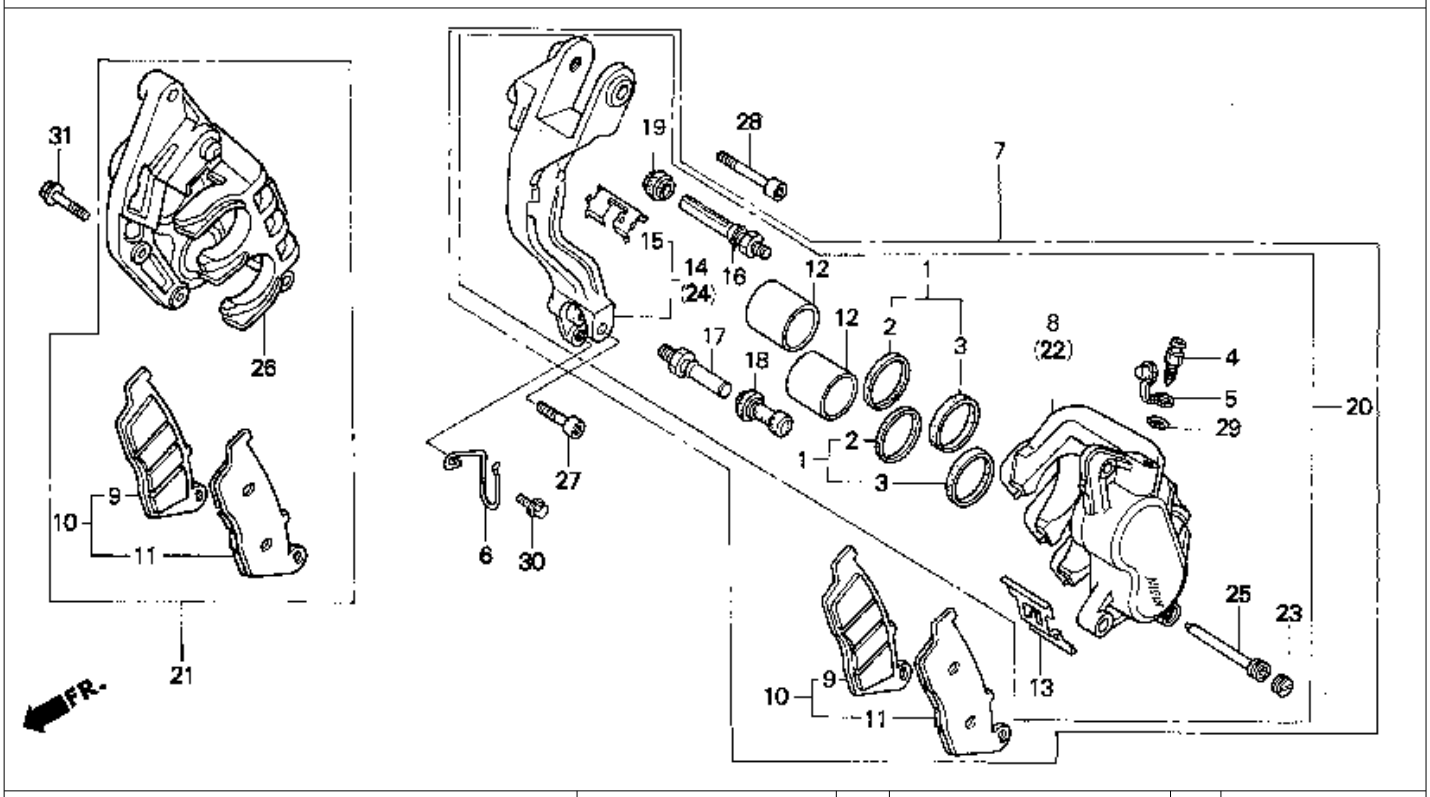

9 = PC800'89 6 = PC800'96
0 = PC800'90 7 = PC800'97
4 = PC800'94 8 = PC800'98
5 = PC800'95

Ref. No.	BLOCK NO. F-11 / DESCRIPTION	PC800 1989	1990	1994	1995	1996	1997	1998	AREA CODE	FRAME SERIAL FROM	FRAME NUMBER TO	QTY REQ	PART NUMBER
20	CALIPER SUB-ASSY., L. FR. BRAKE (NISSIN)	..	..	..	..	6	..	..		.....	.....	1	45150-MR5-A21
	CALIPER SUB-ASSY., L. FR.	..	..	..	..	..	7	8		.....	.....	1	45150-MR5-A31
21	CALIPER ASSY., R. FR. (NISSIN)	9	..	..	..	..	..	..	A	.....	.....	1	45200-MR5-008
		9	..	..	..	..	..	..	AC	.....	.....	1	45200-MR5-008
	CALIPER ASSY., R. FR. (NISSIN)	9	..	..	..	..	..	..	A	KM003349	.....	1	45200-MR5-018
		9	..	..	..	..	..	..	AC	KM000731	.....	1	45200-MR5-018
	CALIPER ASSY., R. FR. (NISSIN)	..	0	..	..	..	..	..		.....	.....	1	45200-MR5-871
22	BODY, R. FR. CALIPER (NISSIN)	9	0	..	..	..	..	..		.....	.....	1	45201-MR5-006
23	PLUG. PIN	9	0	4	5	6	7	8		.....	.....	2	45203-MG3-016
24	BRACKET COMP., R. FR. (NISSIN)	9	0	4	5	6	..	..		.....	.....	1	45210-MR5-006
	BRACKET COMP., R. FR.	..	..	..	..	..	7	8		.....	.....	1	45210-MAL-601
25	PIN, HANGER (NISSIN)	9	0	4	5	6	7	8		.....	.....	2	45215-ML7-922
26	CALIPER SUB-ASSY., R. FR. BRAKE (NISSIN)	..	..	4	5	..	..	..		.....	.....	1	45250-MR5-305
	CALIPER SUB-ASSY., R. FR. BRAKE (NISSIN)	..	..	..	..	6	..	..		.....	.....	1	45250-MR5-A21
	CALIPER SUB-ASSY., R. FR. BRAKE	..	..	..	..	..	7	8		.....	.....	1	45250-MR5-A31
27	BOLT, SOCKET (6X25)	9	0	4	5	6	7	8		.....	.....	1	90105-MJ1-000

 © AMERICAN HONDA MOTOR CO. INC. 1997

FRONT BRAKE CALIPER

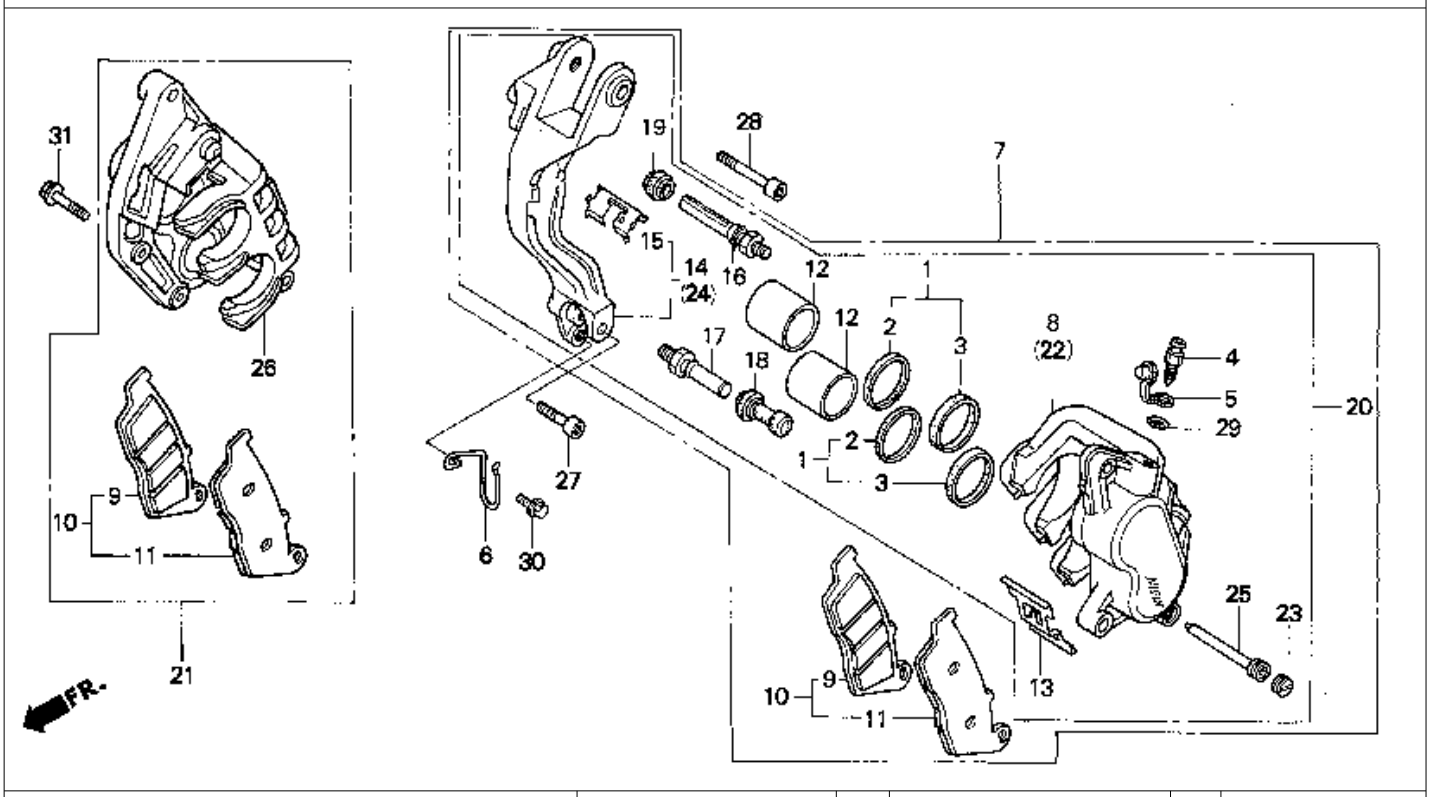

9 = PC800'89
0 = PC800'90
4 = PC800'94
5 = PC800'95
6 = PC800'96
7 = PC800'97
8 = PC800'98

Ref. No.	BLOCK NO. F-11 / DESCRIPTION	PC800 1989	1990	1994	1995	1996	1997	1998	AREA CODE	FRAME SERIAL NUMBER FROM	TO	QTY REQ	PART NUMBER
28	BOLT, SOCKET (8X32)	9	0	4	5	6	7	8		.....	.....	1	90131-ML7-000
29	O-RING (NISSIN)	9	0	4	5	..	..	..		.....	.....	2	91355-MG9-006
30	BOLT, FLANGE (6X12)	9	0	4	5	..	..	..		.....	.....	1	95701-06012-07
	BOLT, FLANGE (6X10)	..	..	..	..	6	..	..		.....	.....	1	95701-06010-07
31	BOLT, FLANGE (8X32)	9	0	4	5	6	7	8		.....	.....	2	96400-08032-07
NI	BRAKE PAD KIT	9	0	..	..	..	..	..		.....	.....	2	451A0-MR5-670
	PAD SET, FR. BRAKE	9	0	..	..	..	..	..		.....	.....	2	45101-ML7-405

 © AMERICAN HONDA MOTOR CO. INC. 1997

FRONT DISK COVER

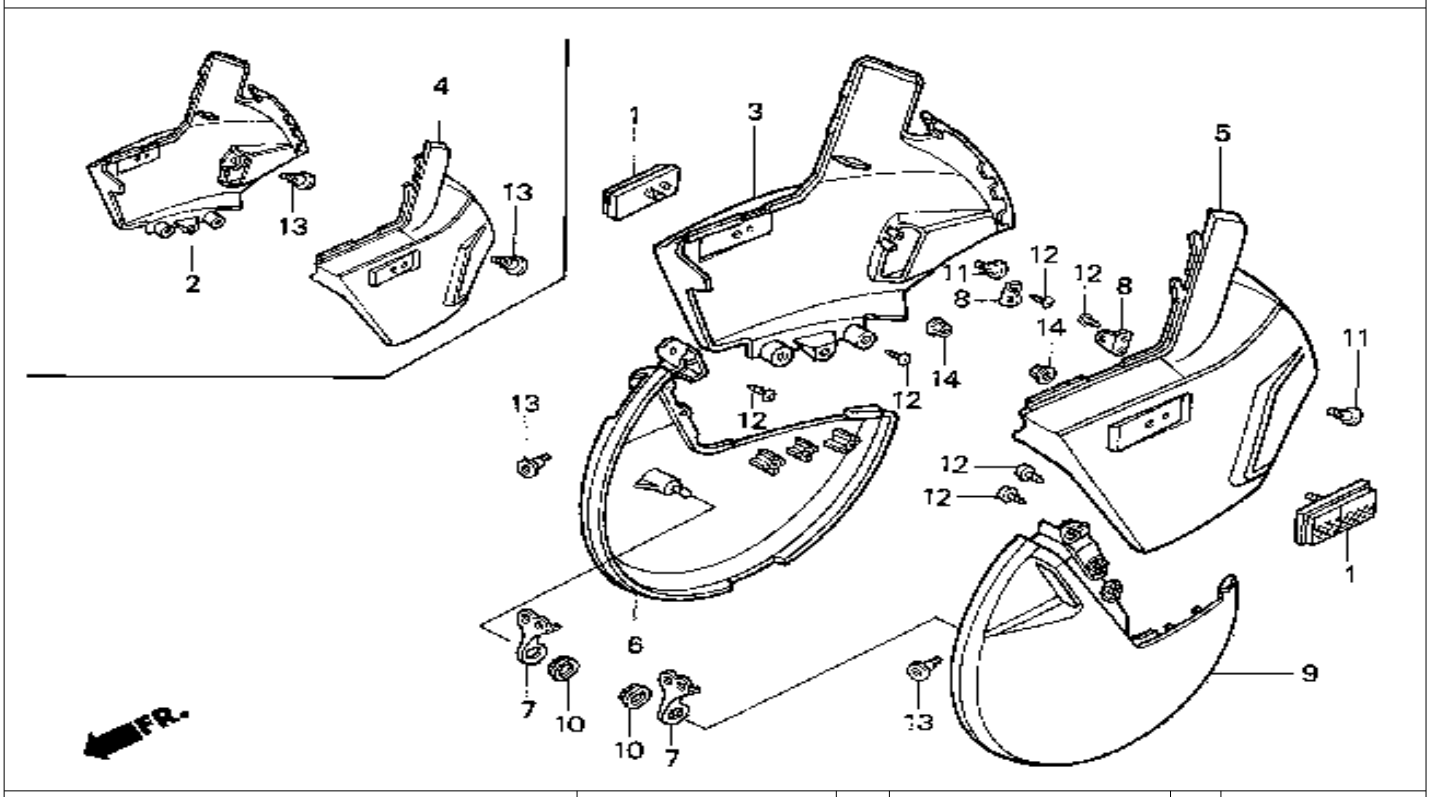

9 = PC800'89
0 = PC800'90
4 = PC800'94
5 = PC800'95
6 = PC800'96
7 = PC800'97
8 = PC800'98

Ref. No.	BLOCK NO. F-12 / DESCRIPTION	PC800 1989	1990	1994	1995	1996	1997	1998	AREA CODE	FRAME SERIAL NUMBER FROM	TO	QTY REQ	PART NUMBER
1	REFLECTOR, FR. REFLEX	9	0	..	..	..	..	..		.....	.....	2	33741-ME9-672
	REFLECTOR, FR. REFLEX	9	0	4	5	6	7	..		.....	.....	2	33741-ME9-673
2	COVER, R. FR . CALIPER *NH251P* (PACIFIC WHITE)	9	..	..	..	..	..	..		.....	.....	1	45120-MR5-000ZA
	COVER, R. FR . CALIPER *NH251P* (PACIFIC WHITE)	9	..	..	..	..	..	..		.....	.....	1	45120-MR5-010ZA
3	COVER, R. FR . CALIPER *R101CU* (CANDY GLORY RED)	..	0	..	..	..	..	..		.....	.....	1	45120-MR5-010ZC
	COVER, R. FR . CALIPER *NH1Z* (BLACK-Z)	..	..	4	5	..	..	..		.....	.....	1	45120-MR5-010ZE
	COVER, R. FR . CALIPER *R201* (MAGNA RED)	..	..	..	..	6	..	..		.....	.....	1	45120-MR5-010ZF
4	COVER, L. FR . CALIPER *NH251P* (PACIFIC WHITE)	9	..	..	..	..	..	..		.....	.....	1	45130-MR5-000ZA
	COVER, L. FR . CALIPER *NH251P* (PACIFIC WHITE)	9	..	..	..	..	..	..		.....	.....	1	45130-MR5-010ZA

 © AMERICAN HONDA MOTOR CO. INC. 1997

FRONT DISK COVER

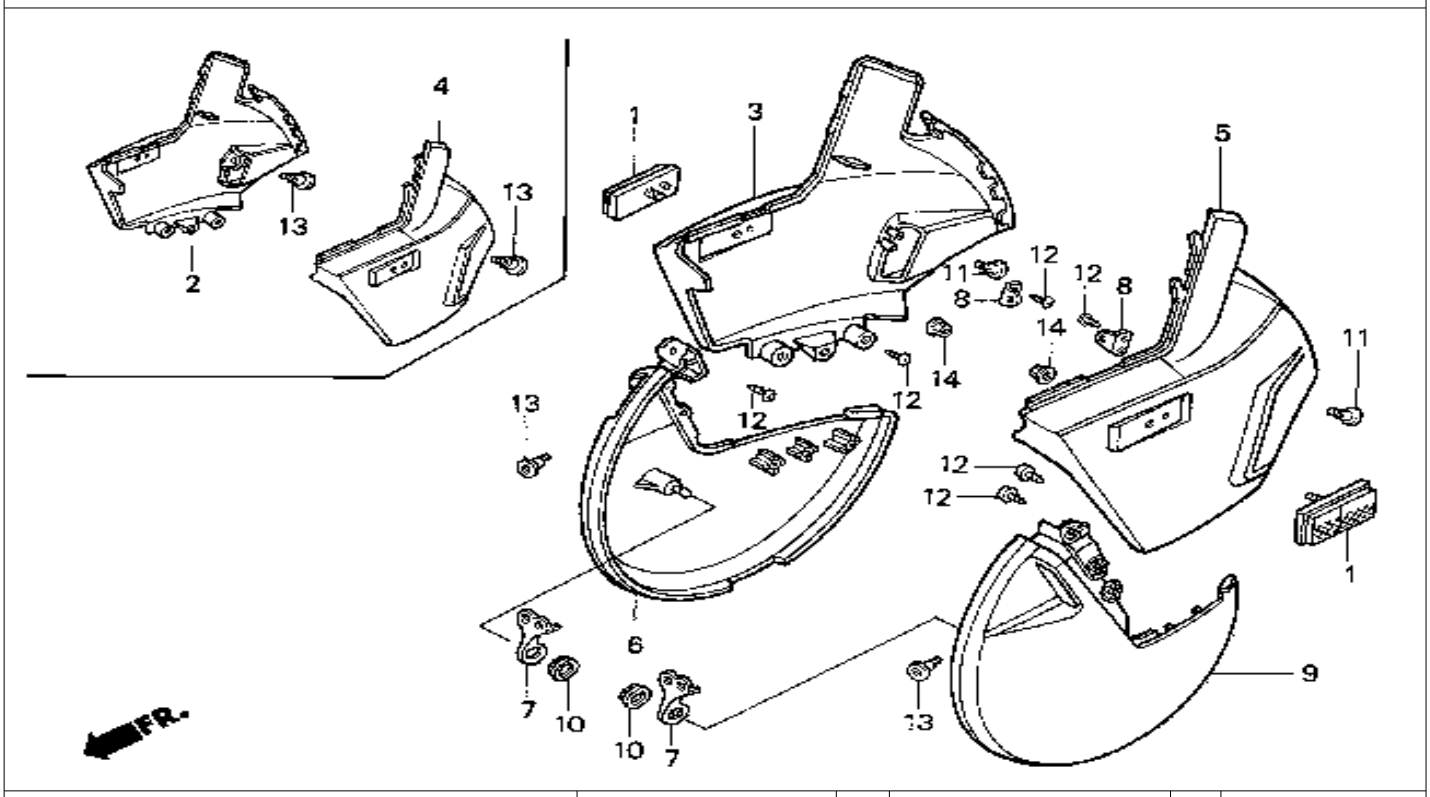

9 = PC800'89 6 = PC800'96
0 = PC800'90 7 = PC800'97
4 = PC800'94 8 = PC800'98
5 = PC800'95

Ref. No.	BLOCK NO. F-12 / DESCRIPTION	PC800 1989	1990	1994	1995	1996	1997	1998	AREA CODE	FRAME SERIAL NUMBER FROM	TO	QTY REQ	PART NUMBER
5	COVER, L. FR . CALIPER *R101CU* (CANDY GLORY RED)	..	0	..	..	..	..	..		.....	.....	1	45130-MR5-010ZC
	COVER, L. FR . CALIPER *NH1Z* (BLACK-Z)	..	..	4	5	..	..	..		.....	.....	1	45130-MR5-010ZE
	COVER, L. FR . CALIPER *R201* (MAGNA RED)	..	..	..	..	6	..	..		.....	.....	1	45130-MR5-010ZF
6	COVER, R. FR . DISK *NH253M* (TYPE 1) (OCEAN GRAY)	9	..	..	..	..	..	..		.....	.....	1	45255-MR5-000ZA
	COVER, R. FR . DISK *NH292M* (TYPE 3) (GRIFFIN GRAY)	..	0	4	5	..	..	..		.....	.....	1	45255-MR5-000ZC
	COVER, R. FR . DISK *NH292M* (GRIFFIN GRAY)	..	0	4	5	..	..	..		.....	.....	1	45255-MR5-000ZE
	COVER, R. FR . DISK *NH197MU* (KARAKORUM GRAY)	..	..	..	..	6	..	..		.....	.....	1	45255-MR5-000ZF
7	STAY, FR. DISK COVER	9	0	4	5	6	..	..		.....	.....	2	45258-MR5-000
8	STAY, DISK COVER	..	0	4	5	6	..	..		.....	.....	2	45259-MR5-870

 © AMERICAN HONDA MOTOR CO. INC. 1997

FRONT DISK COVER

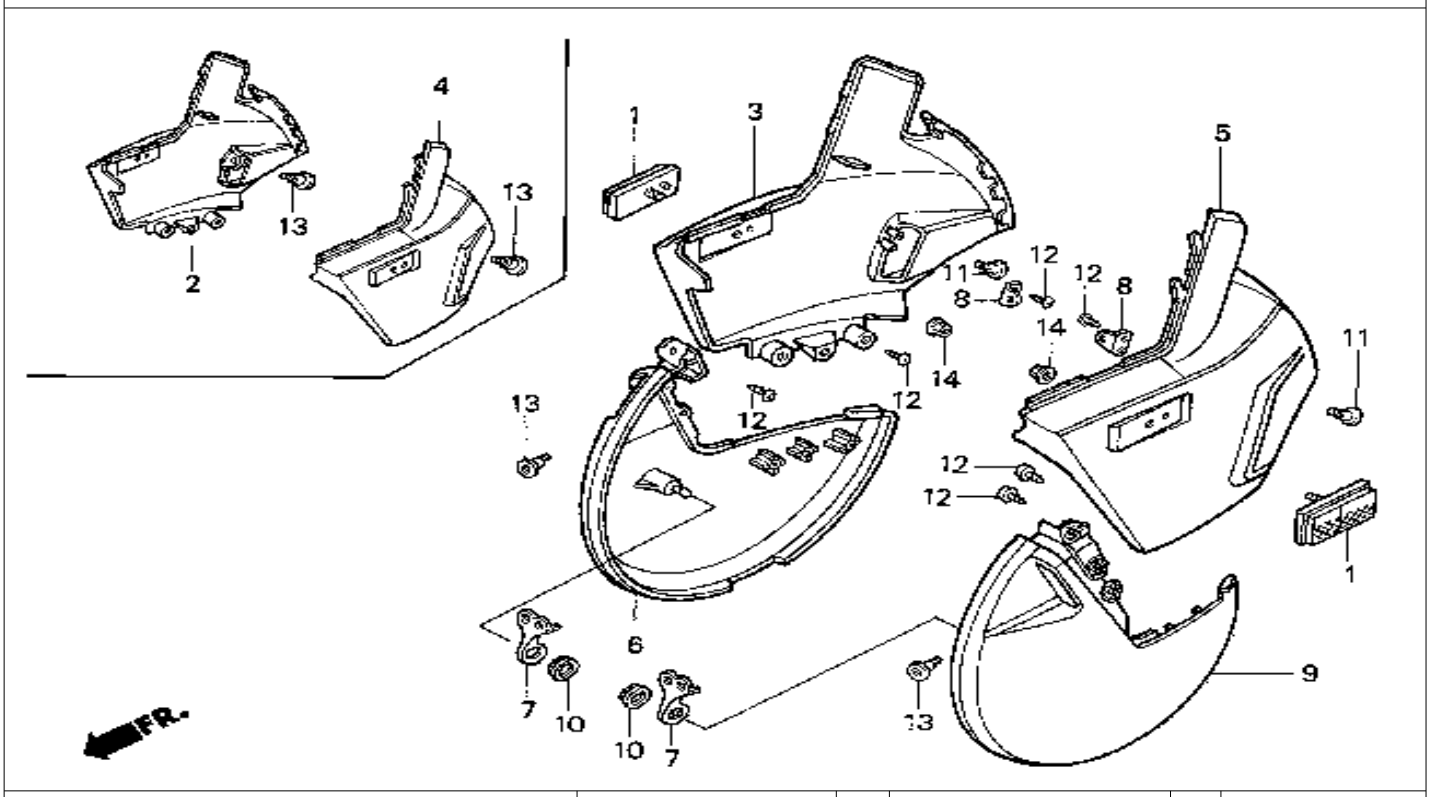

9 = PC800'89 6 = PC800'96
0 = PC800'90 7 = PC800'97
4 = PC800'94 8 = PC800'98
5 = PC800'95

Ref. No.	BLOCK NO. DESCRIPTION	PC800 1989	1990	1994	1995	1996	1997	1998	AREA CODE	FRAME SERIAL NUMBER FROM	TO	QTY REQ	PART NUMBER
9	COVER, L. FR . DISK *NH253M* (TYPE 1)												
	(OCEAN GRAY)	9	..	..	..	..	..	..		.....	.....	1	45355-MR5-000ZA
	COVER, L. FR . DISK *NH292M* (TYPE 3)												
	(GRIFFIN GRAY)	..	0	4	5	..	..	..		.....	.....	1	45355-MR5-000ZC
	COVER, L. FR . DISK *NH197MU*												
	(KARAKORUM GRAY)	..	..	..	..	6	..	..		.....	.....	1	45355-MR5-000ZF
10	GROMMET, AIR CLEARNER HOUSING	9	0	4	5	6	..	..		.....	.....	2	83551-300-000
11	BOLT, SOCKET (6X12)	..	0	4	5	6	..	..		.....	.....	2	90003-HA0-003
12	SCREW, TAPPING (4X12)	9	..	..	..	..	..	..		.....	.....	12	90101-SA4-000
		..	0	4	5	6	..	..		.....	.....	16	90101-SA4-000
	SCREW, TAPPING (4X16)	9	..	..	..	..	..	..		.....	.....	12	93913-14280
		..	0	4	5	6	..	..		.....	.....	16	93913-14280
13	SCREW, PAN (6X14)	9	..	..	..	..	..	..		.....	.....	4	90106-MM4-000
		..	0	4	5	6	..	..		.....	.....	2	90106-MM4-000
14	NUT, FLANGE (5MM)	9	0	4	5	6	..	..		.....	.....	2	94050-05080

 © AMERICAN HONDA MOTOR CO. INC. 1997

FRONT WHEEL

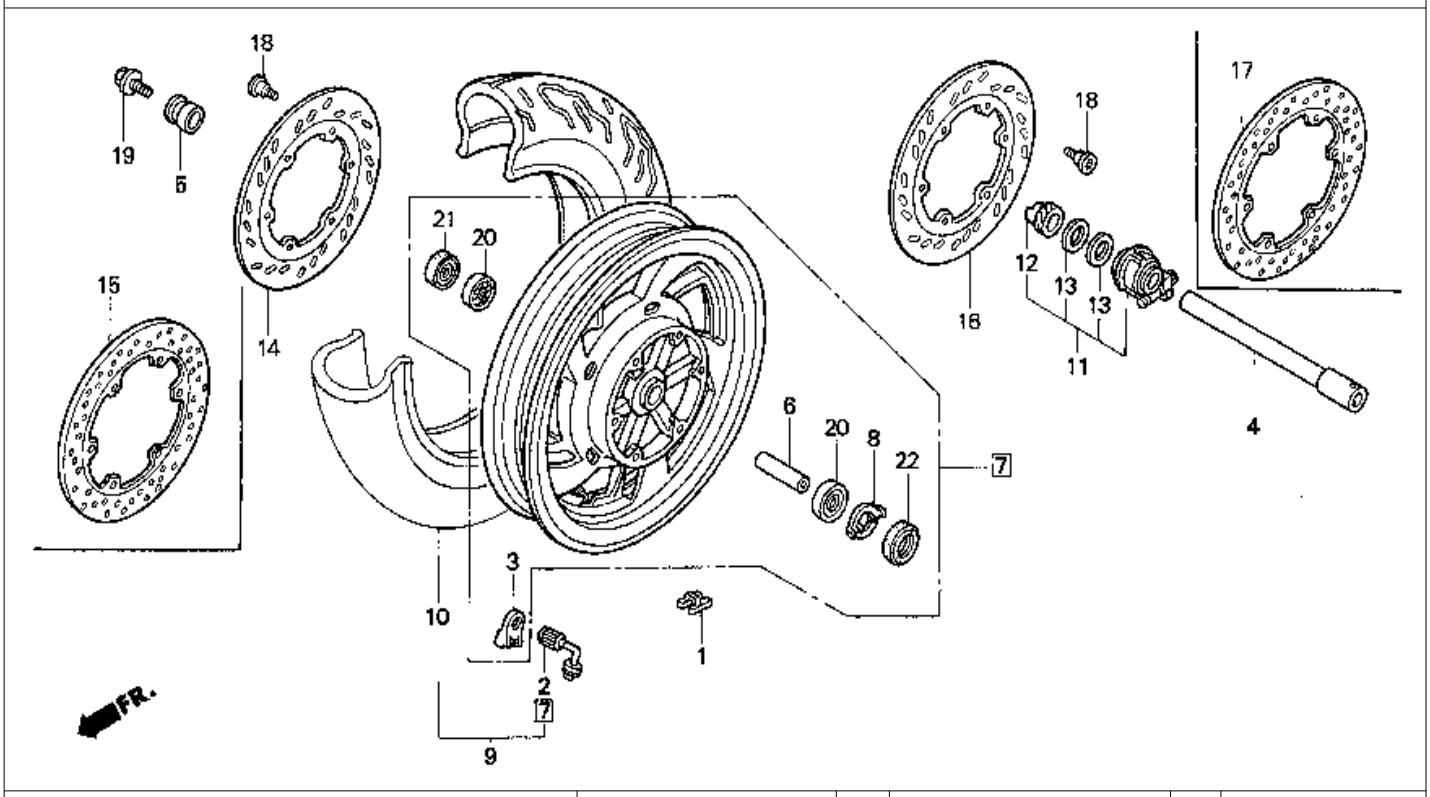

9 = PC800'89 6 = PC800'96
0 = PC800'90 7 = PC800'97
4 = PC800'94 8 = PC800'98
5 = PC800'95

Ref. No.	BLOCK NO. F-13 / DESCRIPTION	1989 9	1990 0	1994 4	1995 5	1996 6	1997 7	1998 8	AREA CODE	FRAME SERIAL FROM		FRAME NUMBER TO	QTY REQ	PART NUMBER
1	WEIGHT, BALANCE (10G)	9	0	4	5	6	7	8		.....		.....	AR	42704-MB0-000
	WEIGHT, BALANCE (20G)	9	0	4	5	6	7	8		.....		.....	AR	42705-MB0-000
	WEIGHT, BALANCE (30G)	9	0	4	5	6	7	8		.....		.....	AR	42706-MB0-000
2	VALVE, RIM (DUNLOP)	9	0	4	5	6	7	8		.....		.....	1	42753-MN5-004
3	HOLD, RIM VALVE	9	0	4	5	6	7	8		.....		.....	1	42754-MN5-000
4	AXLE, FR. WHEEL	9	0	4	5	6	7	8		.....		.....	1	44301-MR5-000
5	COLLAR, FR. WHEEL SIDE	9	0	4	5	6	7	8		.....		.....	1	44311-ML7-000
6	COLLAR, FR. AXLE DISTANCE	9	0	4	5	6	7	8		.....		.....	1	44620-MN5-000
7	WHEEL SET, FR.	9	0	4	5	6	7	8		.....		.....	1	44650-MR5-305
8	RETAINER, GEAR BOX	9	0	4	5	6	7	8		.....		.....	1	44680-ML7-000
9	TIRE ASSY., FR. (120/80-17) (16H K555F)													
	(DUNLOP)	9	0	4	..	..	..	..		.....		.....	1	44710-MR5-004
	TIRE ASSY., FR. (120/80-17) (16H K177F)													
	(US DUNLOP)	9	0	4	..	..	..	..		.....		.....	1	44710-MR5-005
	TIRE ASSY., FR. (120/80-17) (16H)													
	(DUNLOP)	..	0	4	..	..	..	..		.....		.....	1	44710-MR5-871

 © AMERICAN HONDA MOTOR CO. INC. 1997

FRONT WHEEL

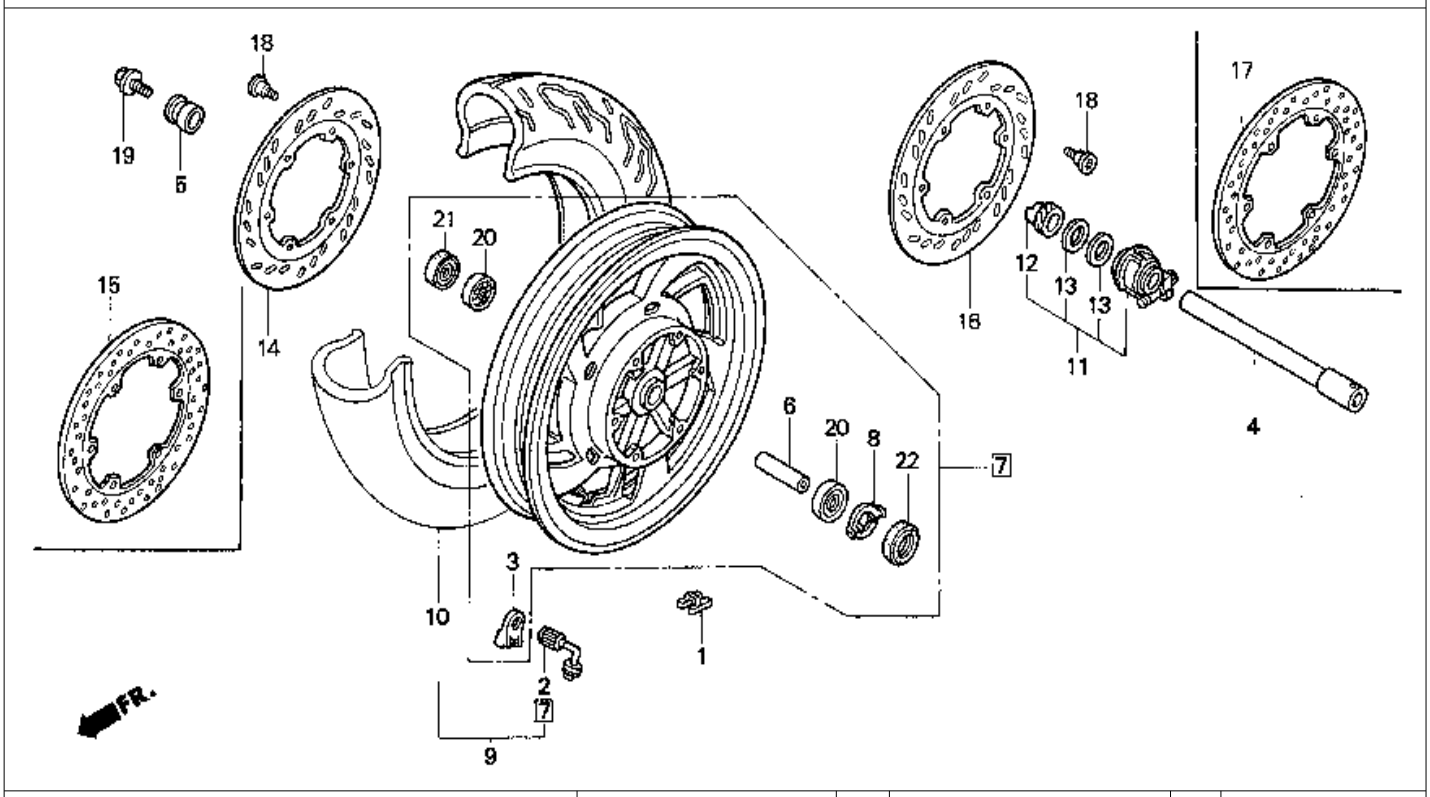

9 = PC800'89 6 = PC800'96
0 = PC800'90 7 = PC800'97
4 = PC800'94 8 = PC800'98
5 = PC800'95

Ref. No.	BLOCK NO. F-13 / DESCRIPTION	PC800 1989	1990	1994	1995	1996	1997	1998	AREA CODE	FRAME SERIAL NUMBER FROM	TO	QTY REQ	PART NUMBER
10	TIRE ASSY., FR. (120/80-17) (16H K177F)												
	(US DUNLOP)	..	..	..	5	6	7	8		.....	.....	1	44711-MR5-005
	TIRE ASSY., FR. (120/80-17) (16H K555F)	..	..	..	..	..	..	..					
	(DUNLOP)	..	..	..	5	6	7	8		.....	.....	1	44711-MR5-871
	TIRE ASSY., FR. (120/80-17) (16V)	..	..	..	..	..	..	..					
	(DUNLOP)	..	..	..	5	6	7	8		.....	.....	1	44711-MZ5-004
11	BOX ASSY., SPEEDOMETER GEAR	9	0	4	5	6	7	8		.....	.....	1	44800-ML7-691
12	GEAR, SPEADOMETER	9	0	4	5	6	7	8		.....	.....	1	44806-ML7-691
13	WASHER, SPEEDOMETER GEAR	9	0	4	5	6	7	8		.....	.....	2	44809-ML7-003
14	DISK, R. FR. BRAKE	9	0	4	5	6	..	..		.....	.....	1	45251-MR5-000
15	DISK, R. FR. BRAKE	..	..	..	..	..	7	8		.....	.....	1	45251-MV9-000
16	DISK, L. FR. BRAKE	9	0	4	5	6	..	..		.....	.....	1	45351-MR5-000
17	DISK, L. FR. BRAKE	..	..	..	..	..	7	8		.....	.....	1	45351-MV9-000
18	BOLT, FR. DISK (8X24)	9	0	4	5	6	7	8		.....	.....	12	90105-KR3-000
19	BOLT, FR. AXEL	9	0	4	5	6	7	8		.....	.....	1	90305-ML7-000
20	BEARING, RADIAL BALL (6004)	9	0	4	5	6	7	8		.....	.....	2	91504-MN8-741

 © AMERICAN HONDA MOTOR CO. INC. 1997

FRONT WHEEL

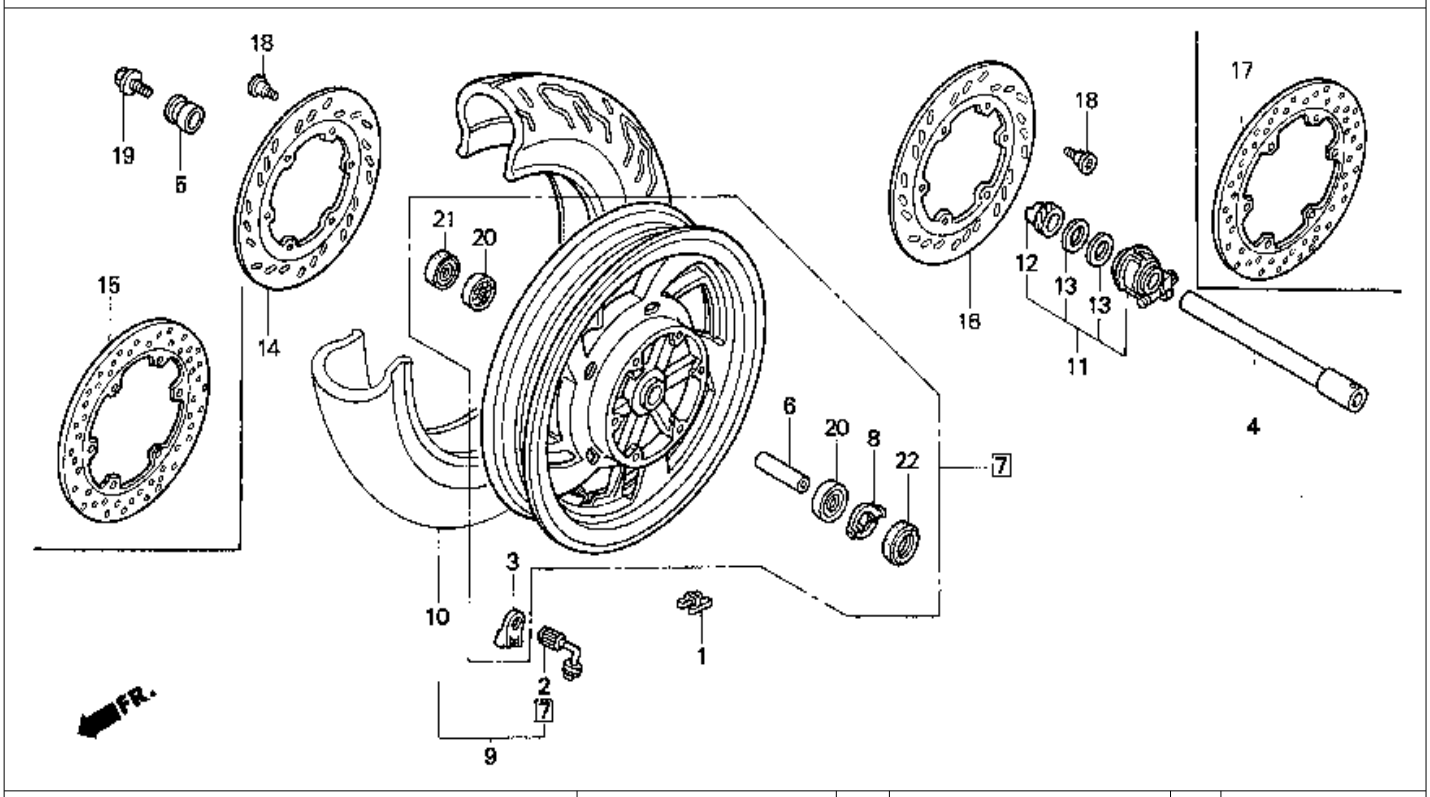

9 = PC800'89	6 = PC800'96								A				
0 = PC800'90	7 = PC800'97			PC800					R				
4 = PC800'94	8 = PC800'98								E			Q	
5 = PC800'95									A			T	
			1	1	1	1	1	1				Y	
			9	9	9	9	9	9	C				
			8	9	9	9	9	9	O	FRAME		R	
Ref.	BLOCK NO.	F-13	9	0	4	5	6	7	8	D	SERIAL	NUMBER	E	
No.	DESCRIPTION		9	0	4	5	6	7	8	E	FROM	TO	Q	PART NUMBER
21	DUST SEAL (28X42X8) (ARAI)		9	0	..	..	6	..	..		.....	.....	1	91257-KA3-712
	DUST SEAL (28X42X8) (NOK)		9	0	4	5	6	7	8		.....	.....	1	91257-KA3-712
22	DUST SEAL (45X55X8) (NOK)		9	0	..	..	6	..	..		.....	.....	1	91258-ML7-004
	DUST SEAL (45X55X8) (ARAI)		9	0	4	5	6	7	8		.....	.....	1	91258-ML7-003

 © AMERICAN HONDA MOTOR CO. INC. 1997

REAR BRAKE PANEL

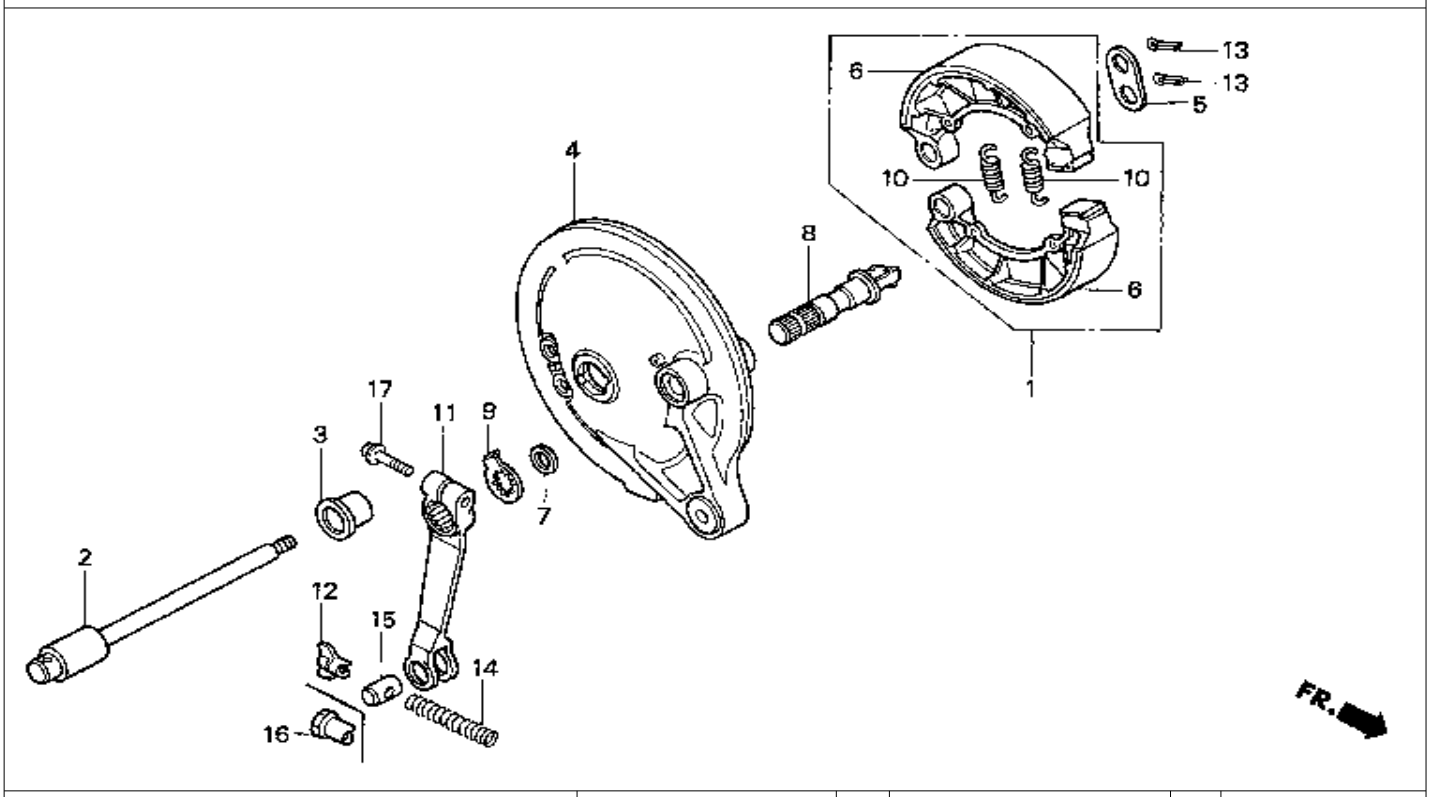

9 = PC800'89 6 = PC800'96
0 = PC800'90 7 = PC800'97
4 = PC800'94 8 = PC800'98
5 = PC800'95

Ref. No.	BLOCK NO. F-14 / DESCRIPTION	1998 99	1990	1994	1995	1996	1997	1998	AREA CODE	FRAME SERIAL NUMBER FROM	TO	QTY REQ	PART NUMBER
1	BRAKE SHOE KIT	..	..	4	5	6	7	8		.....	.....	1	06430-MR5-006
2	AXEL, RR. WHEEL	9	0	4	5	6	7	8		.....	.....	1	42301-MR5-000
3	COLLAR, RR. WHEEL SIDE	9	0	4	5	6	7	8		.....	.....	1	42313-MR5-000
4	PANEL COMP., BRAKE	9	0	4	5	6	7	8		.....	.....	1	43100-MR5-000
5	WASHER, ANCHOR PIN	9	0	4	5	6	7	8		.....	.....	1	43102-319-000
6	SHOE COMP., RR. BRAKE	9	0	..	..	..	..	..		.....	.....	2	43120-MR5-006
7	DUST SEAL, BRAKE CAM	9	0	4	5	6	7	8		.....	.....	1	43134-300-000
8	CAM, RR. BRAKE	9	0	4	..	..	..	..		.....	.....	1	43141-MB0-000
	CAM, RR. BRAKE	9	0	4	5	6	7	8		.....	.....	1	43141-MB0-010
9	INDICATOR, RR. BRAKE	9	0	4	5	6	7	8		.....	.....	1	43145-ME5-000
10	SPRING, RR.BRAKE SHOE	9	0	4	5	6	7	8		.....	.....	2	43151-346-000
11	ARM, RR. BRAKE	9	0	4	5	6	..	8		.....	.....	1	43410-MR5-000
	ARM, RR. BRAKE	..	..	..	..	..	7	..		.....	.....	1	43410-MR5-A30
12	NUT, BRAKE ADJUSTING	9	0	4	5	6	..	..		.....	.....	1	43459-HB2-000
13	PIN, COTTER (2.5MM)	9	0	4	5	6	7	8		.....	.....	2	94201-25200
	PIN, COTTER (2.5MM)	9	0	4	5	6	7	8		.....	.....	2	94201-25250

 © AMERICAN HONDA MOTOR CO. INC. 1997

REAR BRAKE PANEL

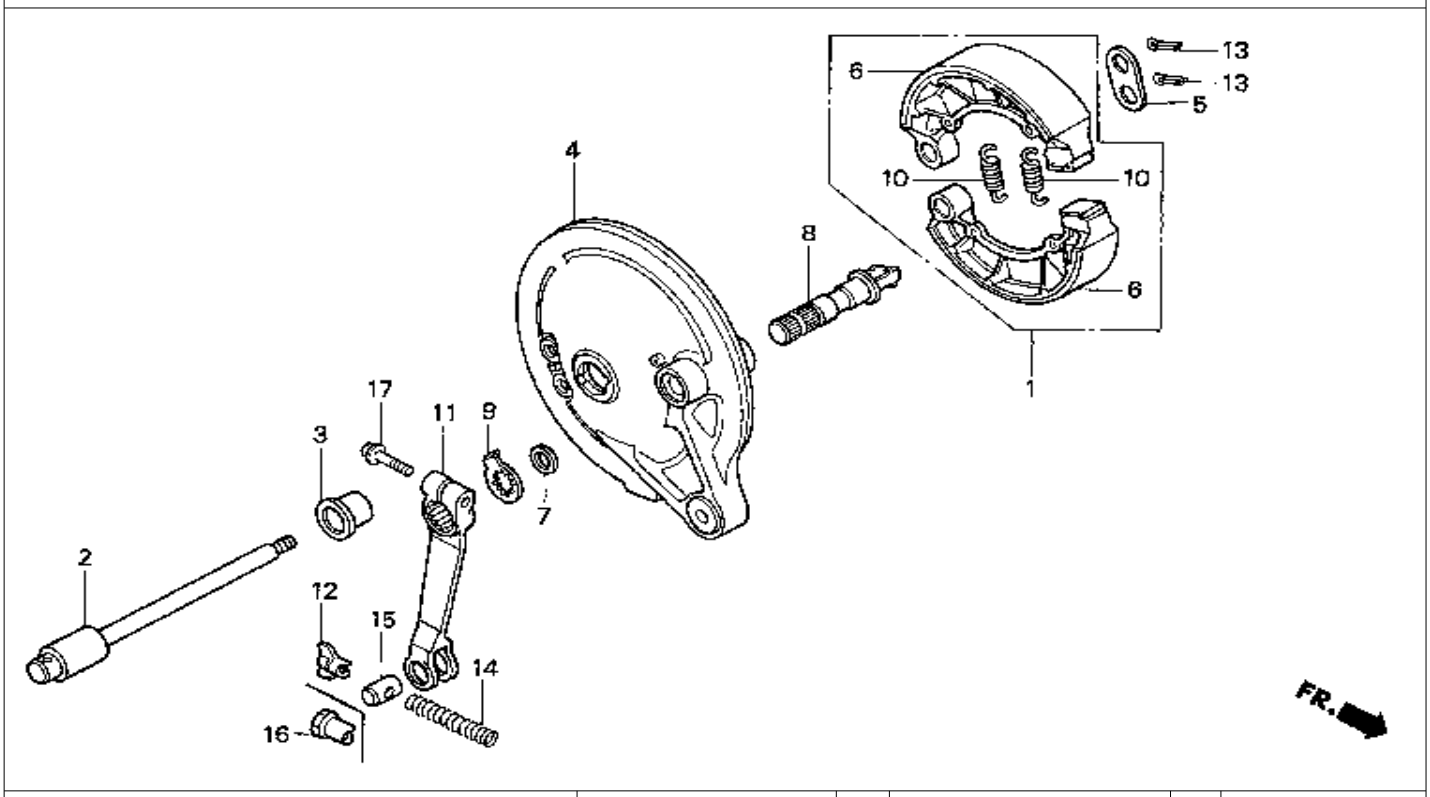

9 = PC800'89 6 = PC800'96
0 = PC800'90 7 = PC800'97
4 = PC800'94 8 = PC800'98
5 = PC800'95

Ref. No.	BLOCK NO. F-14 / DESCRIPTION	1989	1990	1994	1995	1996	1997	1998	AREA CODE	FRAME SERIAL NUMBER FROM	TO	QTY REQ	PART NUMBER
		PC800											
13	PIN, COTTER (2.5MM)	9	0	4	5	6	7	8		.....	.....	2	94201-25300
14	SPRING A, BRAKE ROD	9	0	4	5	6	7	8		.....	.....	1	95014-73100
15	JOINT, BRAKE ARM	9	0	4	5	6	7	8		.....	.....	1	95015-32001
16	NUT B, BRAKE ROD ADJ	..	..	..	..	..	7	8		.....	.....	1	95015-42000
17	BOLT, FLANGE (8X25)	9	0	4	5	6	..	8		.....	.....	1	95701-08025-00
	BOLT, FLANGE (8X25)	..	0	..	..	..	..	..		.....	.....	1	95700-08025-00
	BOLT, FLANGE (8X25)	..	..	..	..	..	7	..		.....	.....	1	90131-GAA-000
NI	BRAKE SHOE KIT	9	0	..	..	..	..	..		.....	.....	1	06430-MR5-006
	BRAKE SHOE KIT	9	0	..	..	..	..	..		.....	.....	1	431A0-MR5-670

 © AMERICAN HONDA MOTOR CO. INC. 1997

REAR WHEEL

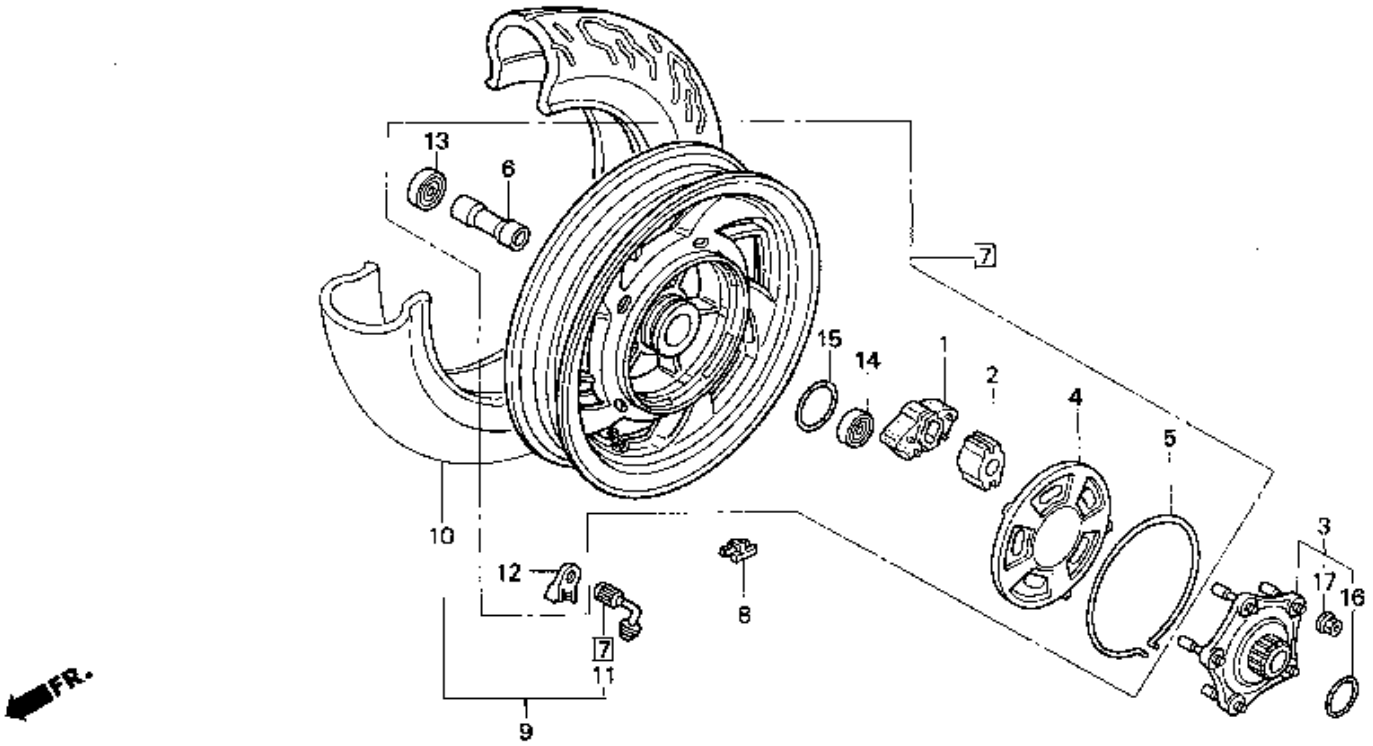

9 = PC800'89 6 = PC800'96
0 = PC800'90 7 = PC800'97
4 = PC800'94 8 = PC800'98
5 = PC800'95

Ref. No.	BLOCK NO. F-15 / DESCRIPTION	1998	1999	1999	1999	1999	1999	1998	AREA CODE	FRAME SERIAL FROM		FRAME NUMBER TO	QTY REQ	PART NUMBER
		PC800												
1	DAMPER, RR. WHEEL	9	0	4	5	6	7	8		.....		.....	5	41241-MR5-000
2	PIECE, DAMPER WHEEL	9	0	4	5	6	7	8		.....		.....	5	41242-MR5-000
3	FLANGE ASSY., FINAL DRIVEN	9	0	4	..	..	..	..		.....		.....	1	42610-MR5-000
	FLANGE SET, FINAL DRIVEN	..	..	4	5	6	7	8		.....		.....	1	42630-MR5-305
4	HOLDER, DAMPER	9	0	4	5	6	7	8		.....		.....	1	42617-MR5-000
5	STOPPER, DAMPER HOLDER	9	0	4	5	6	7	8		.....		.....	1	42618-MR5-000
6	COLLAR, RR. AXEL DISTANCE	9	0	4	5	6	7	8		.....		.....	1	42620-MN5-000
7	WHEEL SET, RR.	9	0	4	5	6	7	8		.....		.....	1	42650-MR5-305
8	WEIGHT, BALANCE (10G)	9	0	4	5	6	7	8		.....		.....	AR	42704-MB0-000
	WEIGHT, BALANCE (20G)	9	0	4	5	6	7	8		.....		.....	AR	42705-MB0-000
	WEIGHT, BALANCE (30G)	9	0	4	5	6	7	8		.....		.....	AR	42706-MB0-000
9	TIRE ASSY., RR. (140/80-15) (67H K555) (DUNLOP)	9	..	..	..	..	..	..		.....		.....	1	42710-MR5-004
	TIRE ASSY., RR. (140/80-15) (67H K555) (US DUNLOP)	9	0	4	..	..	..	..		.....		.....	1	42710-MR5-005
	TIRE ASSY., RR. (140/80-15) (67H K177) (US DUNLOP)	9	0	4	..	..	..	..		.....		.....	1	42711-MR5-005

 © AMERICAN HONDA MOTOR CO. INC. 1997

NOTE: Part Ref No 3. FLANGE ASSY., FINAL DRIVEN the copy is so badly photocopied but looks like a 4 in the year column.

REAR WHEEL

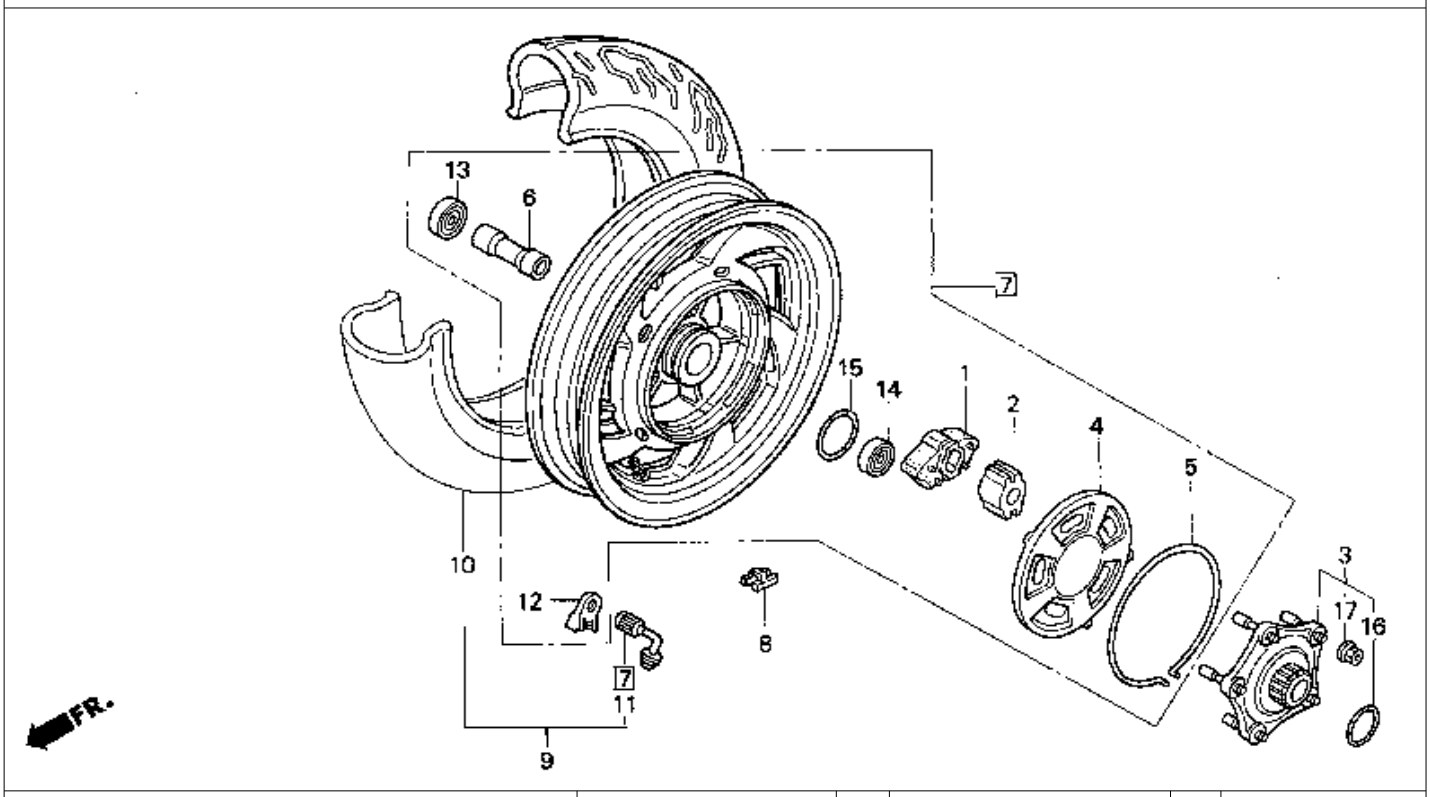

9 = PC800'89 6 = PC800'96
0 = PC800'90 7 = PC800'97
4 = PC800'94 8 = PC800'98
5 = PC800'95

Ref. No.	BLOCK NO. F-15 / DESCRIPTION	1989 9	1990 0	1994 4	1995 5	1996 6	1997 7	1998 8	AREA CODE	FRAME SERIAL NUMBER FROM		TO	QTY REQ	PART NUMBER
9	TIRE ASSY., RR. (140/80-15) (67H K555) (DUNLOP)	..	0	4	..	..	..	..		.....		.....	1	42710-MR5-871
	TIRE ASSY., RR. (140/80-15) (67H K555) (DUNLOP)	..	0	4	..	..	..	..		.....		.....	1	42711-MR5-871
10	TIRE ASSY., RR. (140/80-15) (67H K177) (US DUNLOP)	..	..	..	5	6	7	8		.....		.....	1	42711-MR5-005
	TIRE ASSY., RR. (140/80-15) (67H K555) (DUNLOP)	..	..	..	5	6	7	8		.....		.....	1	42711-MR5-871
11	VALVE, RIM (DUNLOP)	9	0	4	5	6	7	8		.....		.....	1	42753-MN5-004
12	HOLD, RIM VALVE	9	0	4	5	6	7	8		.....		.....	1	42754-MN5-000
13	BEARING, RADIAL BALL (6204UU) (NSK)	9	0	4	5	6	7	8		.....		.....	1	91052-MM5-003
14	BEARING, RADIAL BALL (6304UU) (C3)	9	0	4	5	6	7	8		.....		.....	1	91053-MR5-003
15	O-RING (66X1.9)	9	0	4	5	6	7	8		.....		.....	1	91302-MR5-003
16	O-RING (46X5X3.5)	9	0	4	5	6	7	8		.....		.....	1	91358-MB0-000
17	NUT, FLANGE (10MM)	9	0	4	5	6	7	8		.....		.....	1	94050-10080

 © AMERICAN HONDA MOTOR CO. INC. 1997

FINAL DRIVEN GEAR

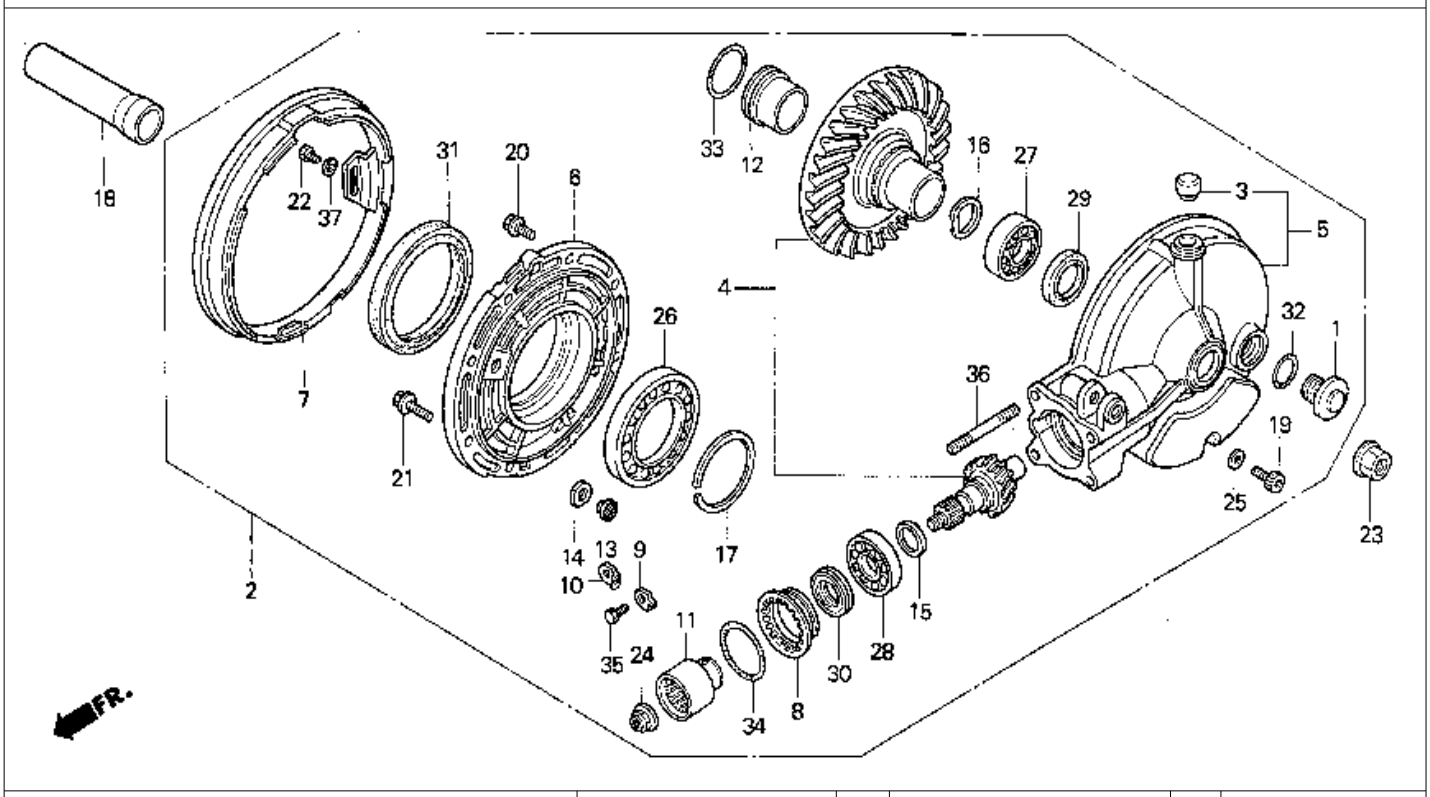

9 = PC800'89 6 = PC800'96
0 = PC800'90 7 = PC800'97
4 = PC800'94 8 = PC800'98
5 = PC800'95

Ref. No.	BLOCK NO. F-16 DESCRIPTION	1989	1990	1994	1995	1996	1997	1998	AREA CODE	FRAME SERIAL FROM		NUMBER TO	QTY REQ	PART NUMBER
1	CAP, VALVE ADJ	9	0	4	5	6	7	8		.....		.....	1	12361-035-000
	CAP, VALVE ADJ	9	0	4	5	6	7	8		.....		.....	1	12361-300-000
	CAP, VALVE ADJ	9	0	4	5	6	7	8		.....		.....	1	12361-371-980
2	GEAR ASSY., FINAL	9	0	4	5	6	7	8		.....		.....	1	41300-MR5-000
3	CAP, BREATHER	9	0	4	5	6	7	8		.....		.....	1	41306-MB0-010
4	GEAR SET, FINAL	9	0	4	5	6	7	8		.....		.....	1	41310-MB0-305
5	CASE SET, FINAL	9	0	4	5	6	7	8		.....		.....	1	41311-MR5-305
6	COVER, GEAR CASE	9	0	4	5	6	7	8		.....		.....	1	41321-ME5-770
7	PLATE, DUST GEAR	9	0	4	5	6	7	8		.....		.....	1	41324-MR5-000
8	RETAINER, BEARING	9	0	4	5	6	7	8		.....		.....	1	41331-ME9-010
9	LOCK A, BEARING ADJ	9	0	4	5	6	7	8		.....		.....	1	41332-415-000
10	LOCK B, BEARING ADJ	9	0	4	5	6	7	8		.....		.....	1	41333-415-000
11	JOINT, PINION	9	0	4	5	6	7	8		.....		.....	1	41410-ME9-770
12	HOLDER, O-RING	9	0	4	5	6	7	8		.....		.....	1	41433-MB0-010
13	PIN, RING GEAR STOPPER	9	0	4	5	6	7	8		.....		.....	1	41436-MB0-310
14	SHIM A, STOPPER PIN (0.10)	9	0	4	5	6	7	8		.....		.....	1	41437-MB0-310

 © AMERICAN HONDA MOTOR CO. INC. 1997

FINAL DRIVEN GEAR

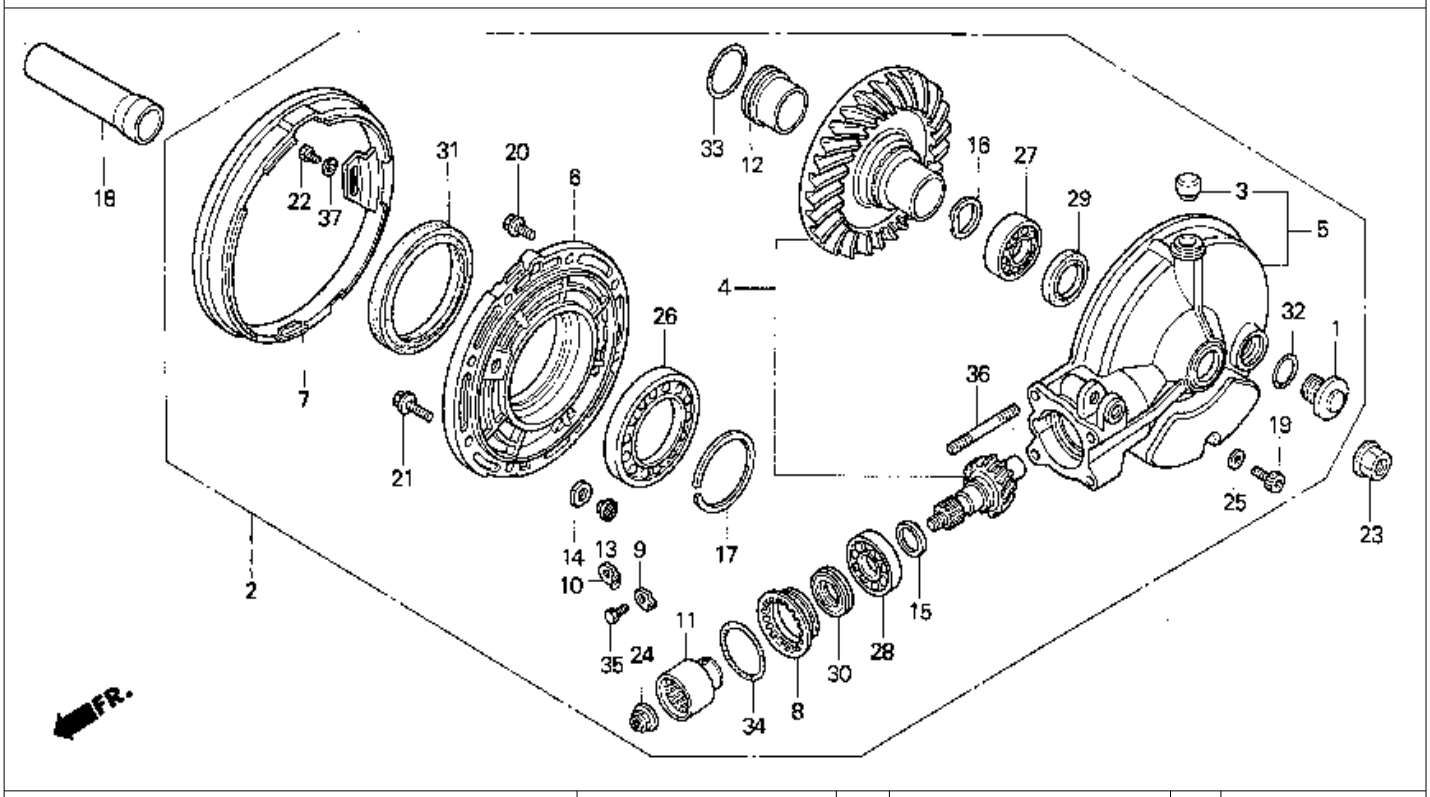

9 = PC800'89 6 = PC800'96
0 = PC800'90 7 = PC800'97
4 = PC800'94 8 = PC800'98
5 = PC800'95

Ref. No.	BLOCK NO. F-16 / DESCRIPTION	1989	1990	1994	1995	1996	1997	1998	AREA CODE	FRAME SERIAL FROM		FRAME NUMBER TO	QTY REQ	PART NUMBER
14	SHIM B, STOPPER PIN (0.15)	9	0	4	5	6	7	8		.....		.....	1	41438-MB0-310
15	SHIM A, PINION GEAR (1.82)	9	0	4	5	6	7	8		.....		.....	1	41450-MG8-000
	SHIM B, PINION GEAR (1.88)	9	0	4	5	6	7	8		.....		.....	1	41451-MG8-000
	SHIM C, PINION GEAR (1.94)	9	0	4	5	6	7	8		.....		.....	1	41452-MG8-000
	SHIM D, PINION GEAR (2.00)	9	0	4	5	6	7	8		.....		.....	1	41453-MG8-000
	SHIM E, PINION GEAR (2.06)	9	0	4	5	6	7	8		.....		.....	1	41454-MG8-000
	SHIM F, PINION GEAR (2.12)	9	0	4	5	6	7	8		.....		.....	1	41455-MG8-000
	SHIM G, PINION GEAR (2.30)	9	0	4	5	6	7	8		.....		.....	1	41456-MG8-000
16	WASHER, SPECIAL (35X40)	9	0	4	5	6	7	8		.....		.....	1	41510-MB0-003
17	SPACER A, RING GEAR (1.82)	9	0	4	5	6	7	8		.....		.....	1	41530-MB0-000
	SPACER B, RING GEAR (1.88)	9	0	4	5	6	7	8		.....		.....	1	41531-MB0-000
	SPACER C, RING GEAR (1.94)	9	0	4	5	6	7	8		.....		.....	1	41532-MB0-000
	SPACER D, RING GEAR (2.00)	9	0	4	5	6	7	8		.....		.....	1	41533-MB0-000
	SPACER E, RING GEAR (2.06)	9	0	4	5	6	7	8		.....		.....	1	41534-MB0-000
	SPACER F, RING GEAR (2.12)	9	0	4	5	6	7	8		.....		.....	1	41535-MB0-000
	SPACER G, RING GEAR (2.18)	9	0	4	5	6	7	8		.....		.....	1	41536-MB0-000
	SPACER H, RING GEAR (2.24)	9	0	4	5	6	7	8		.....		.....	1	41537-MB0-000
	SPACER D, RING GEAR (2.30)	9	0	4	5	6	7	8		.....		.....	1	41538-MB0-000

89 © AMERICAN HONDA MOTOR CO. INC. 1997

FINAL DRIVEN GEAR

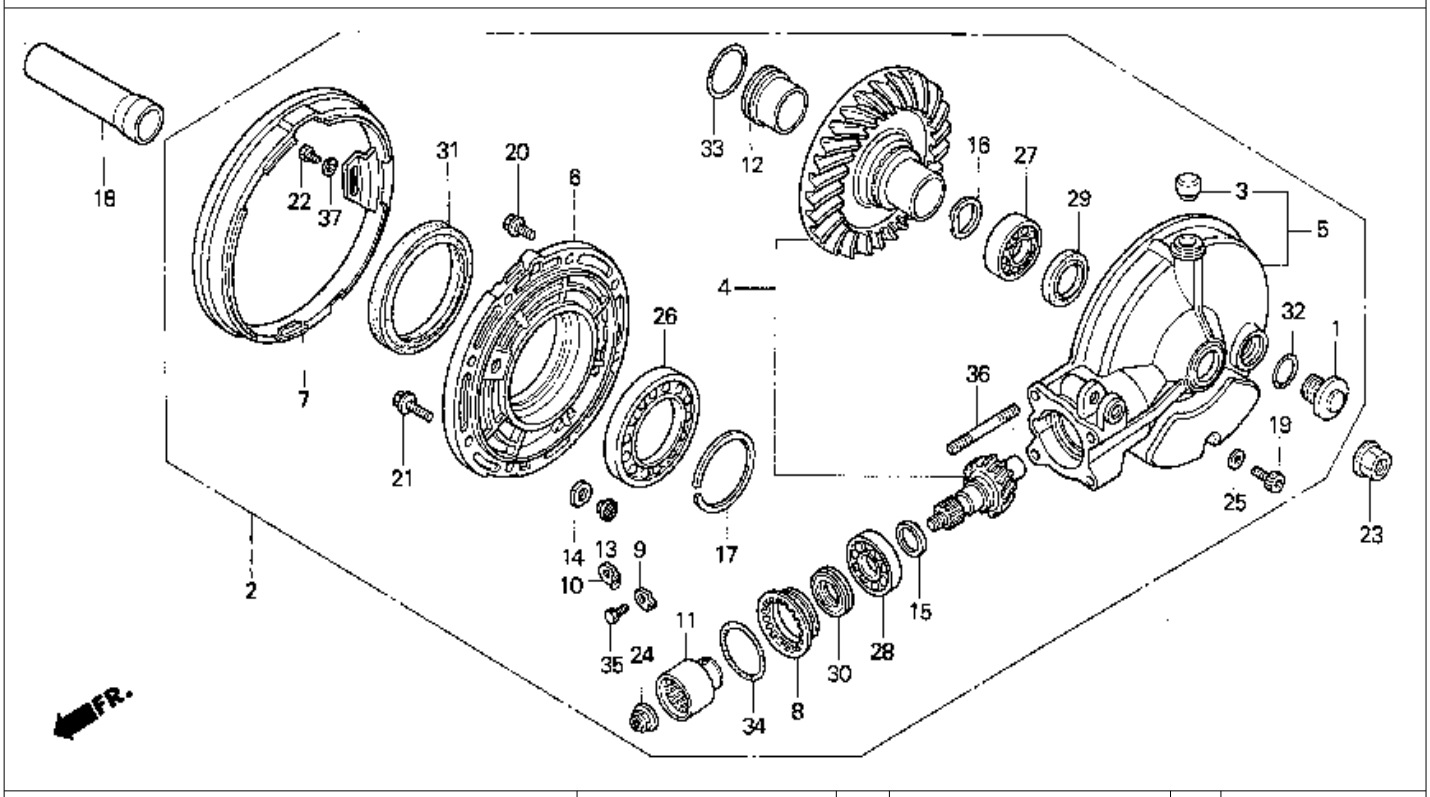

9 = PC800'89 6 = PC800'96
0 = PC800'90 7 = PC800'97
4 = PC800'94 8 = PC800'98
5 = PC800'95

Ref. No.	BLOCK NO. F-16 / DESCRIPTION	1989	1990	1994	1995	1996	1997	1998	AREA CODE	FRAME SERIAL NUMBER FROM		TO	QTY REQ	PART NUMBER
18	COLLAR B, RR. DISTANCE	9	0	4	5	6	7	8		.....		.....	1	42625-MR5-000
19	BOLT, SOCKET (8X11)	9	0	4	5	6	7	8		.....		.....	1	90109-ME5-770
20	BOLT, FLANGE (8X27)	9	0	4	5	6	7	8		.....		.....	6	90133-MB0-000
21	BOLT, FLANGE (10X35)	9	0	4	5	6	7	8		.....		.....	2	90134-HA0-000
22	BOLT, FLANGE (6X16)	9	0	4	5	6	7	8		.....		.....	1	90170-MB0-000
23	NUT, FLANGE (18MM)	9	0	4	5	6	7	8		.....		.....	1	90305-MB4-003
24	NUT, HEX. (16MM)	9	0	4	5	6	7	8		.....		.....	1	90381-MB0-010
25	WASHER (8MM)	9	0	4	5	6	7	8		.....		.....	1	90471-580-000
26	BEARING, RADIAL BALL (16012C3)	9	0	4	5	6	7	8		.....		.....	1	91051-MB0-005
	BEARING, RADIAL BALL (16012C3)	9	0	4	5	6	7	8		.....		.....	1	91051-MG8-005
27	BEARING, RADIAL BALL (57/34C3))	9	0	4	5	6	7	8		.....		.....	1	91052-MB0-003
	BEARING, RADIAL BALL (57/34C3))	9	0	4	5	6	7	8		.....		.....	1	91052-MG8-005
28	BEARING, RADIAL BALL (6305) (TOYO)	9	0	..	..	..	..	..		.....		.....	1	91061-MR5-003
	BEARING, RADIAL BALL (6305)	9	0	4	5	6	7	8		.....		.....	1	91061-MB00-005

 © AMERICAN HONDA MOTOR CO. INC. 1997

FINAL DRIVEN GEAR

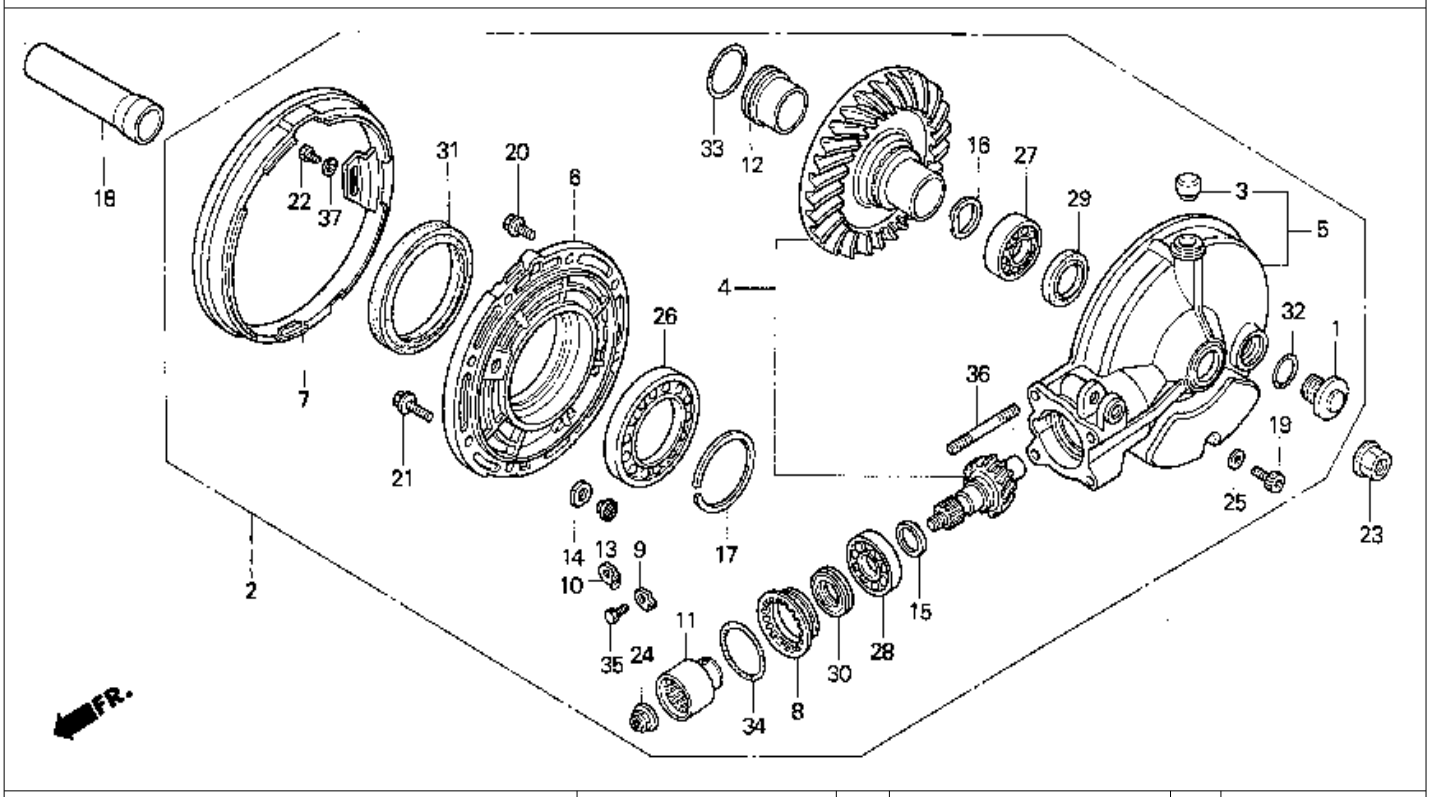

9 = PC800'89 6 = PC800'96
0 = PC800'90 7 = PC800'97
4 = PC800'94 8 = PC800'98
5 = PC800'95

Ref. No.	BLOCK NO. F-16 DESCRIPTION	1989	1990	1994	1995	1996	1997	1998	AREA CODE	FRAME SERIAL NUMBER FROM		TO	QTY REQ	PART NUMBER
28	BEARING, RADIAL BALL (6305) (KOYO)	9	0	4	5	6	7	8		.....		.....	1	91061-MG8-005
29	OIL SEAL (34X50X7) (NOK)	9	0	..	..	..	..	..		.....		.....	1	91261-MB0-005
	OIL SEAL (34X50X7) (ARAI)	9	0	4	5	6	7	8		.....		.....	1	91261-MB0-003
30	OIL SEAL (39X51X7) (ARAI)	9	0	..	..	..	..	..		.....		.....	1	91262-ME9-003
	OIL SEAL (39X51X7) (NOK)	9	0	4	5	6	7	8		.....		.....	1	91262-ME9-005
31	OIL SEAL (60X80X8)	9	0	..	..	..	..	..		.....		.....	1	91265-MB0-000
	OIL SEAL (60X80X8) (NOK)	9	0	4	5	6	7	8		.....		.....	1	91265-MB0-003
32	O—RING (30.8MM)	9	0	4	5	6	7	8		.....		.....	1	91302-001-020
33	O-RING (35.2X2.4)	9	0	4	5	6	7	8		.....		.....	1	91356-MB0-000
	O-RING (35.2X2.4) (NOK)	9	0	4	5	6	7	8		.....		.....	1	91356-MB0-005
34	O-RING (58.5X3.5)	9	0	4	5	6	7	8		.....		.....	1	91353-MB0-003
	O-RING (58.5X3.5)	9	0	4	5	6	7	8		.....		.....	1	91359-MB0-000
35	BOLT, HEX. (6X12)	9	0	..	..	..	..	..		.....		.....	1	92000-06012
	BOLT, HEX. (6X12)	9	0	..	..	..	..	..		.....		.....	1	92000-06012-0A
	BOLT, HEX. (6X12)	9	0	..	..	..	..	..		.....		.....	1	92100-06012

 © AMERICAN HONDA MOTOR CO. INC. 1997

FINAL DRIVEN GEAR

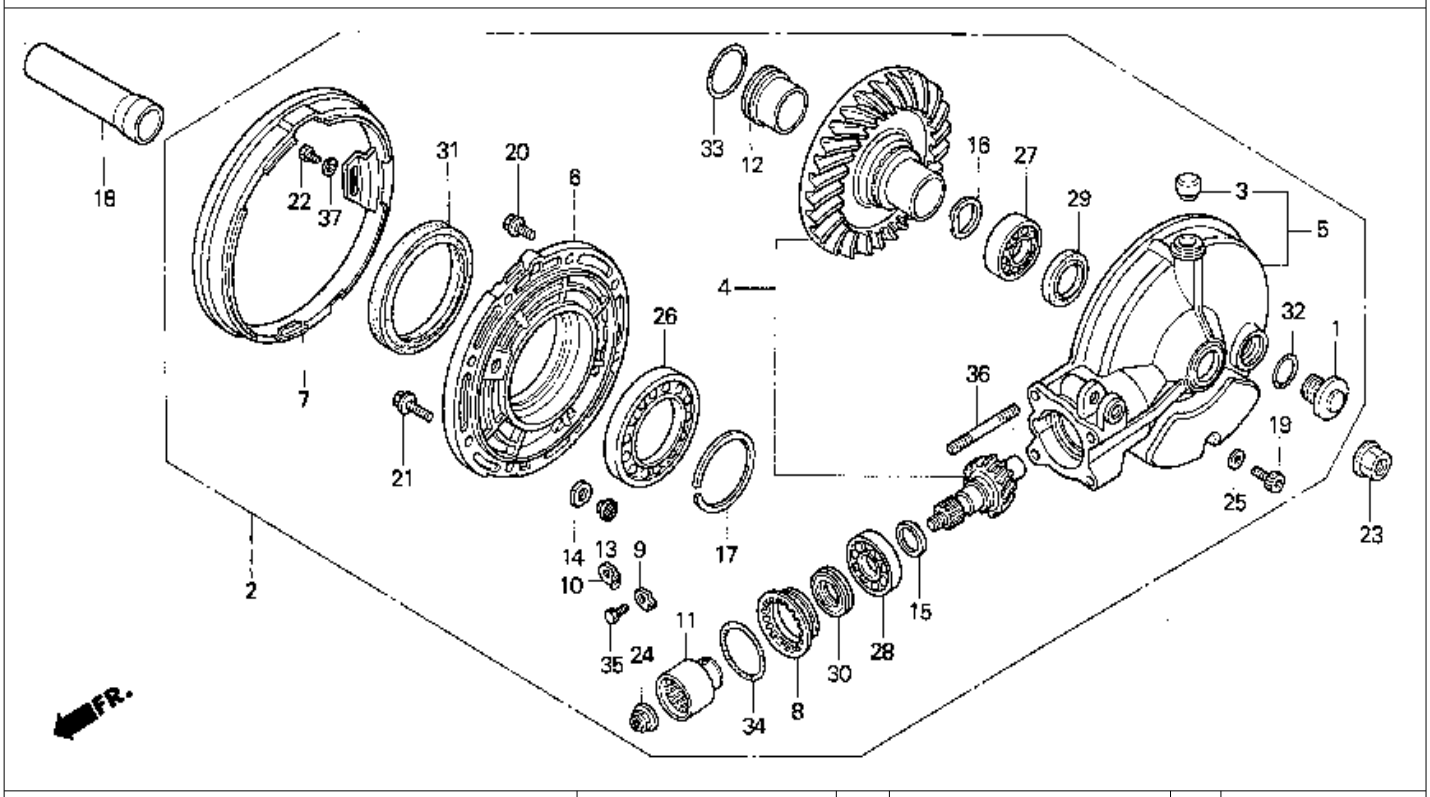

9 = PC800'89 6 = PC800'96
0 = PC800'90 7 = PC800'97
4 = PC800'94 8 = PC800'98
5 = PC800'95

Ref. No.	BLOCK NO. F-16 / DESCRIPTION	1989	1990	1994	1995	1996	1997	1998	AREA CODE	FRAME SERIAL NUMBER FROM	TO	QTY REQ	PART NUMBER
35	BOLT, HEX. (6X12)	9	0	..	..	..	..	..		.....	.....	1	92101-06012
	BOLT, HEX. (6X12)	9	0	4	5	6	7	8		.....	.....	1	92101-06012-0A
36	BOLT, STUD (10X50)	9	0	..	..	..	..	..		.....	.....	4	92700-10050-0E
	BOLT, STUD (10X32)	..	..	4	5	6	7	8		.....	.....	4	92900-10032-0E
37	WASHER, PLAIN (6MM)	9	0	4	5	6	7	8		.....	.....	1	94101-06800

 © AMERICAN HONDA MOTOR CO. INC. 1997

SHELTER

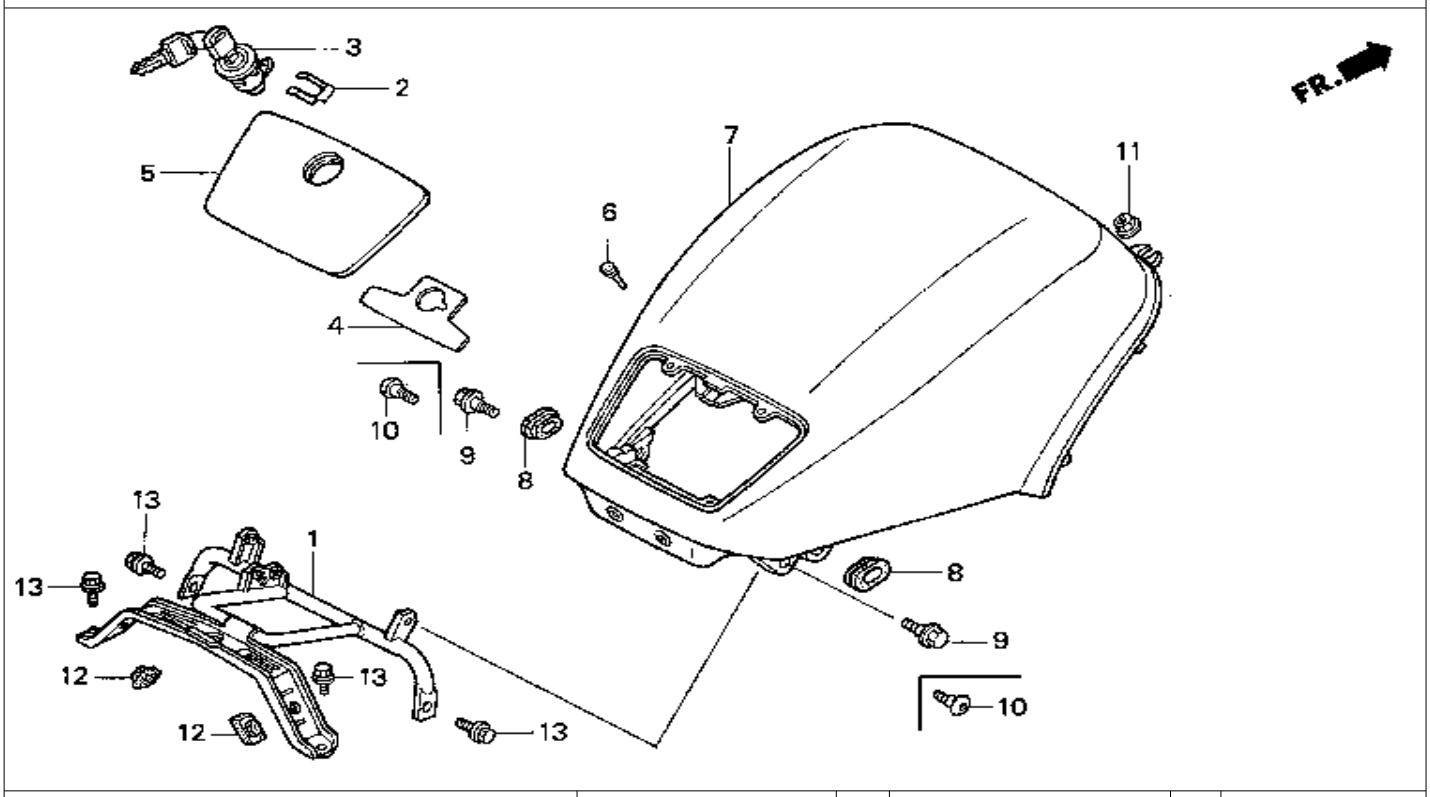

9 = PC800'89 6 = PC800'96
0 = PC800'90 7 = PC800'97
4 = PC800'94 8 = PC800'98
5 = PC800'95

Ref. No.	BLOCK NO. F-17 / DESCRIPTION	1989	1990	1994	1995	1996	1997	1998	AREA CODE	FRAME SERIAL NUMBER FROM		TO	QTY REQ	PART NUMBER
		PC800												
1	STAY, SEAT	9	0	4	5	6	7	8		.....		.....	1	50255-MR5-000
2	SPRING, LOCK KEY SETTING	9	..	..	..	..	..	..		.....		.....	1	75581-673-000
	SPRING, LOCK KEY SETTING	..	0	4	5	6	7	8		.....		.....	1	75581-GN8-920
3	LOCK ASSY., FUEL LID	9	0	4	5	6	7	8		.....		.....	1	77232-GW0-000
4	WASHER, SHELTER LOCK	..	..	4	5	6	7	8		.....		.....	1	77236-MR5-000
5	LID, SHELTER *NH251P*													
	(PACIFIC WHITE)	9	..	..	..	..	..	..		.....		.....	1	83131-MR5-000ZA
	LID, SHELTER *R101CU*													
	(CANDY GLORY RED)	..	0	..	..	..	..	..		.....		.....	1	83131-MR5-000ZC
	LID, SHELTER *NH1Z*													
	(BLACK-Z)	..	..	4	5	..	..	..		.....		.....	1	83131-MR5-000ZE
	LID, SHELTER *R201*													
	(MAGNA RED)	..	..	..	..	6	7	8		.....		.....	1	83131-MR5-000ZF
6	RUBBER, SHELTER LID	9	..	..	..	..	..	..		.....		.....	2	83132-MR5-000
7	SHELTER COMP., TOP *NH251P*													
	(PACIFIC WHITE)	9	..	..	..	..	..	..		.....		.....	1	83160-MR5-000ZA
	SHELTER COMP., TOP *R101CU*													
	(CANDY GLORY RED)	..	0	..	..	..	..	..		.....		.....	1	83160-MR5-000ZC

 © AMERICAN HONDA MOTOR CO. INC. 1997

SHELTER

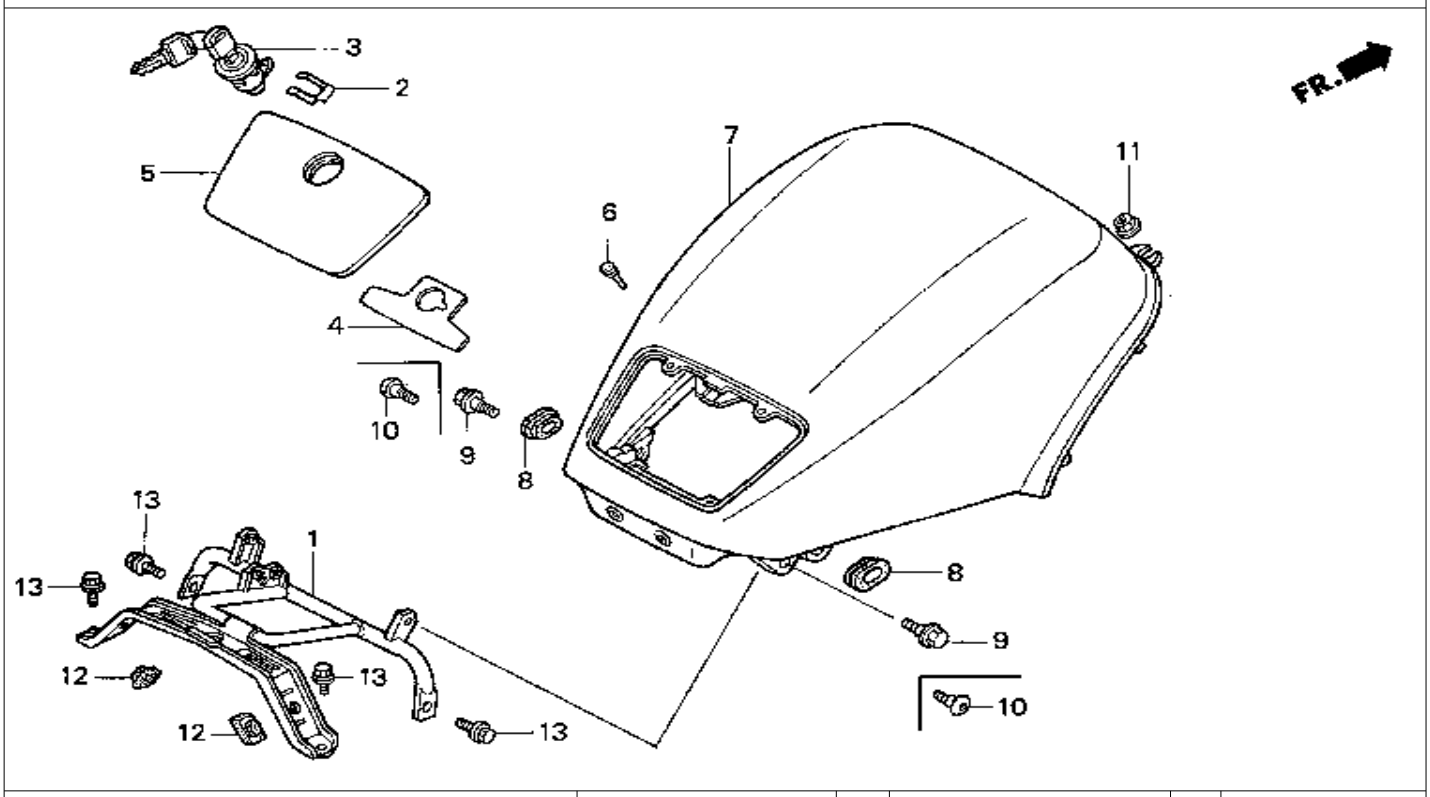

9 = PC800'89
0 = PC800'90
4 = PC800'94
5 = PC800'95
6 = PC800'96
7 = PC800'97
8 = PC800'98

Ref. No.	BLOCK NO. F-17 / DESCRIPTION	1989	1990	1994	1995	1996	1997	1998	AREA CODE	FRAME SERIAL NUMBER FROM	TO	QTY REQ	PART NUMBER
7	SHELTER COMP., TOP *NH1Z* (BLACK-Z)	..	..	4	5	..	..	..		.....	.....	1	83160-MR5-000ZE
	SHELTER COMP., TOP *R201* (MAGNA RED)	..	..	..	..	6	7	8		.....	.....	1	83160-MR5-000ZF
8	GROMMET, AIR CLEARNER HOUSING	9	0	4	5	6	7	8		.....	.....	2	83551-GE2-000
9	BOLT, FLANGE (6MM)	9	0	4	..	..	..	..		.....	.....	2	90111-197-890
10	SCREW, PAN (6X14)	..	..	..	5	6	7	8		.....	.....	2	90113-MM5-000
11	NUT, FLANGE (6MM)	9	0	..	..	..	..	..		.....	.....	2	90302-187-000
	NUT, FLANGE (6MM)	..	..	4	5	6	7	8		.....	.....	2	90301-634-670
12	RUBBER A, STAND STOPPER	9	0	4	5	6	7	8		.....	.....	2	95011-61000
13	BOLT, FLANGE (6X10)	9	0	4	5	6	7	8		.....	.....	4	95701-06010-08

 © AMERICAN HONDA MOTOR CO. INC. 1997

SEAT

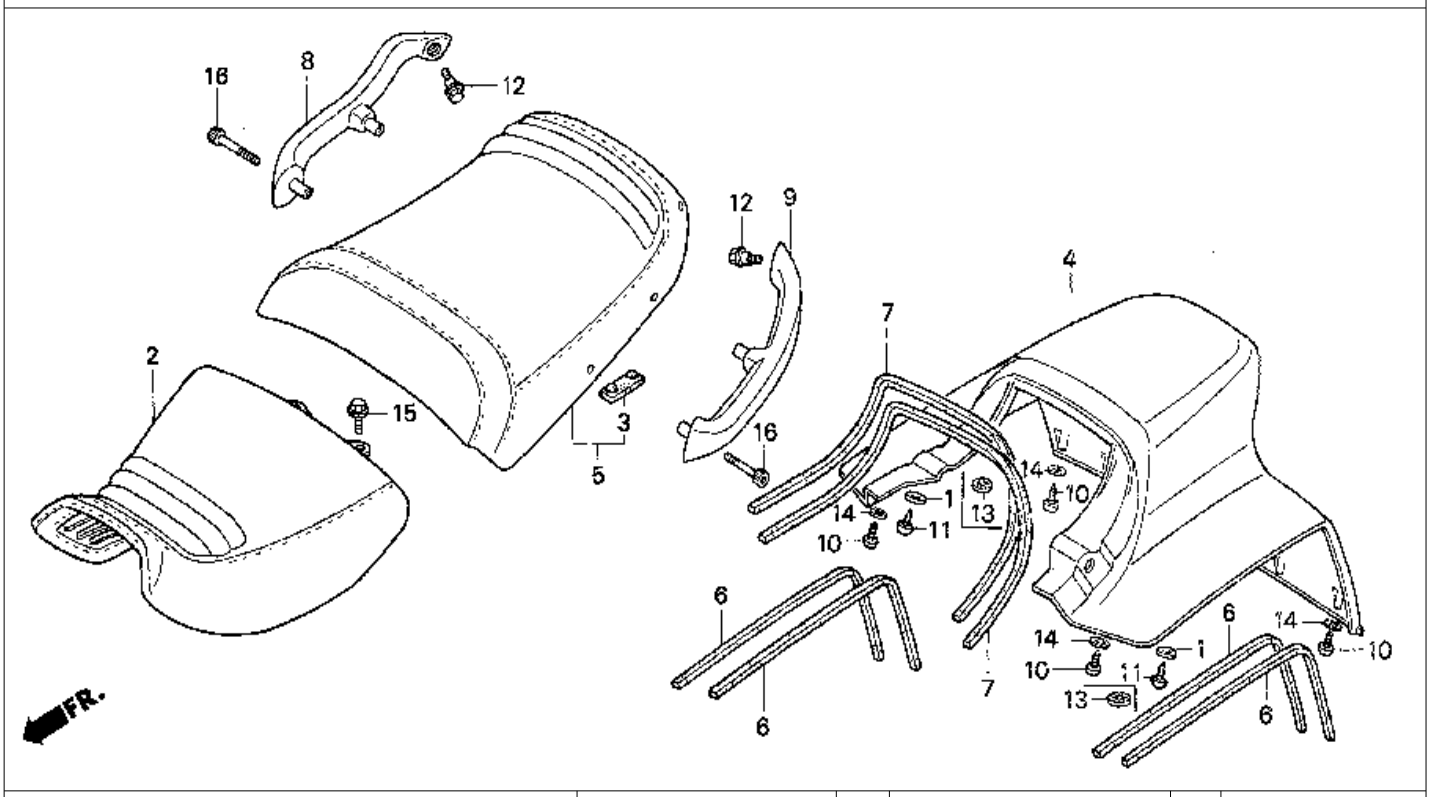

9 = PC800'89	6 = PC800'96								A				
0 = PC800'90	7 = PC800'97			PC800					R				
4 = PC800'94	8 = PC800'98								E			Q	
5 = PC800'95									A			T	
			1	1	1	1	1	1	1			Y	
			9	9	9	9	9	9	9	C			
			8	9	9	9	9	9	9	O	FRAME	R	
Ref.	BLOCK NO.	F-18	8	9	4	5	6	7	8	D	SERIAL NUMBER	E	
No.	DESCRIPTION		9	0	4	5	6	7	8	E	FROM TO	Q	PART NUMBER
1	WASHER, AIR CLEANER COVER SETTING		..	..	4	5	6	7	8		....	2	17224-KN5-670
	WASHER, AIR CLEANER COVER SETTING		..	..	4	5	6	7	8		....	2	17224-MN1-670
2	SEAT COMP., FR. *NH185L*												
	(ATLANTIC GRAY)		9	0	..	..	..	..	..		....	1	77100-MR5-000ZA
	SEAT COMP., FR. *NH185L*												
	(ATLANTIC GRAY)		9	0	4	5	..	..	..		....	1	77100-MR5-830ZA
	SEAT COMP., FR. *NH1L*												
	(BLACK)		..	..	..	..	6	..	..		....	1	77100-MR5-830ZB
	SEAT COMP., FR. *NH1L*												
	(BLACK)		..	..	..	..	..	7	8		....	1	77100-MR5-A30ZA
3	RUBBER, SEAT SETTING		9	0	4	5	6	7	8		....	2	77204-312-000
4	COWL SET, TAIL *NH251P* (TYPE 1) (WL)												
	(PACIFIC WHITE)		9	..	..	..	..	..	..		....	1	77220-MR5-000ZA
	COWL SET, TAIL *R101CU* (TYPE 3) (WL)												
	(CANDY GLORY RED)		..	0	..	..	..	..	..		....	1	77220-MR5-870ZC
	COWL SET, TAIL *NH1Z* (TYPE 5) (WL)												
	(BLACK-Z)		..	..	4	5	..	..	..		....	1	77220-MR5-800ZC

 © AMERICAN HONDA MOTOR CO. INC. 1997

SEAT

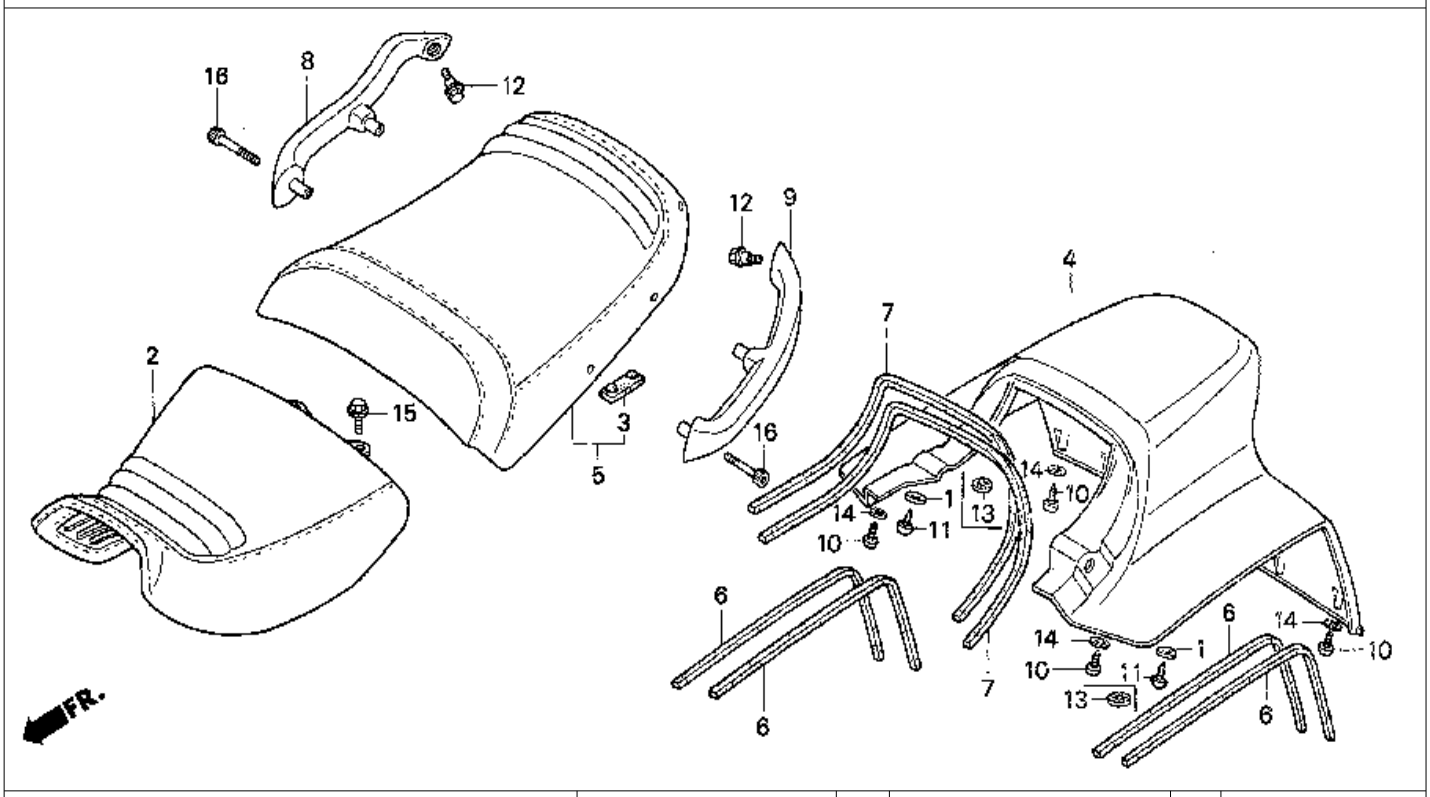

9 = PC800'89	6 = PC800'96							A					
0 = PC800'90	7 = PC800'97		PC800					R					
4 = PC800'94	8 = PC800'98							E				Q	
5 = PC800'95								A				T	
			1	1	1	1	1	1	1			Y	
			9	9	9	9	9	9	9	C			
			8	9	9	9	9	9	9	O	FRAME	R	
Ref.	BLOCK NO.	F-18	8	9	4	5	6	7	8	D	SERIAL NUMBER	E	
No.	DESCRIPTION		9	0	4	5	6	7	8	E	FROM TO	Q	PART NUMBER
4	COWL SET, TAIL *R201* (TYPE 6) (WL)												
	(MAGNA RED)		..	..	..	..	6	7	8		....	1	77220-MR5-A20ZA
5	SEAT COMP., RR. *NH185L*												
	(ATLANTIC GRAY)		9	0	4	5	..	..	..		....	1	77300-MR5-000ZA
	SEAT COMP., RR. *NH1L*												
	(BLACK)		..	..	..	..	6	..	..		....	1	77300-MR5-000ZB
	SEAT COMP., RR. *NH1L*												
	(BLACK)		..	..	..	..	..	7	8		....	1	77300-MR5-A30ZA
6	RUBBER, SEAL		9	0	4	5	6	7	8			4	81354-MR5-300
7	RUBBER, SEAL		9	..	..	..	..	..	..	A	..... KM000866	1	81366-MR5-300
			9	..	..	..	..	..	..	A	KM000867	2	81366-MR5-300
			9	..	..	..	..	..	..	AC	..... KM000075	1	81366-MR5-300
			9	..	..	..	..	..	..	AC	KM000076	2	81366-MR5-300
			..	0	4	5	6	7	8		....	2	81366-MR5-300
8	GRIP, R. PASSENGER *NH185L*												
	(ATLANTIC GRAY)		9	0	4	5	..	..	..		....	1	84110-MR5-000ZA

 © AMERICAN HONDA MOTOR CO. INC. 1997

SEAT

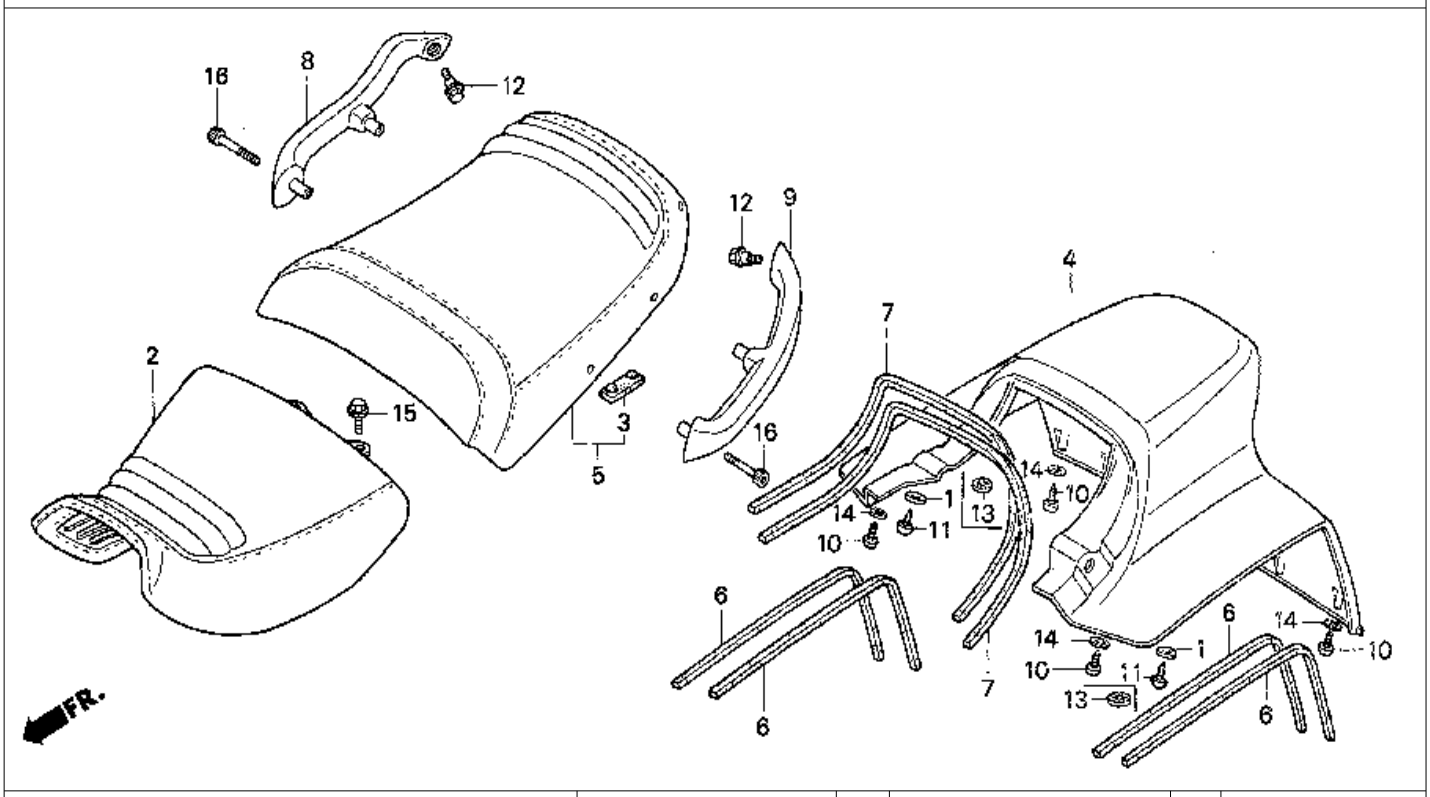

9 = PC800'89 6 = PC800'96
0 = PC800'90 7 = PC800'97
4 = PC800'94 8 = PC800'98
5 = PC800'95

Ref. No.	BLOCK NO. F-18 / DESCRIPTION	1989	1990	1994	1995	1996	1997	1998	AREA CODE	FRAME SERIAL NUMBER FROM	TO	QTY REQ	PART NUMBER
8	GRIP, R. PASSENGER *NH1* (BLACK)	..	..	..	..	6	7	8		.....	.....	1	84110-MR5-000ZB
9	GRIP, L. PASSENGER *NH185L* (ATLANTIC GRAY)	9	0	4	5	..	..	..		.....	.....	1	84120-MR5-000ZA
	GRIP, L. PASSENGER *NH1* (BLACK)	..	..	..	..	6	7	8		.....	.....	1	84120-MR5-000ZB
10	SCREW, TAPPING (4X12)	9	..	..	..	..	..	..	A	.....	KM001538	12	90101-SA4-000
		9	..	..	..	..	..	..	AC	.....	KM000297	12	90101-SA4-000
		..	0	4	5	6	7	8		.....	.....	12	90101-SA4-000
	SCREW-WASHER (4X12)	9	..	..	..	..	..	..	A	KM001539	.....	12	90106-SA7-000
		9	..	..	..	..	..	..	AC	KM000298	.....	12	90106-SA7-000
	SCREW, TAPPING (4X16)	9	..	..	..	..	..	..	A	.....	KM001538	12	93913-14280
		9	..	..	..	..	..	..	AC	.....	KM000297	12	93913-14280
		..	0	4	5	6	7	8		.....	.....	12	93913-14280
11	SCREW, TAPPING (4X10)	..	0	4	..	..	..	..		.....	.....	2	90107-SA7-003
	SCREW, TAPPING (4X10)	..	..	..	5	6	7	8		.....	.....	2	93903-24220

 © AMERICAN HONDA MOTOR CO. INC. 1997

SEAT

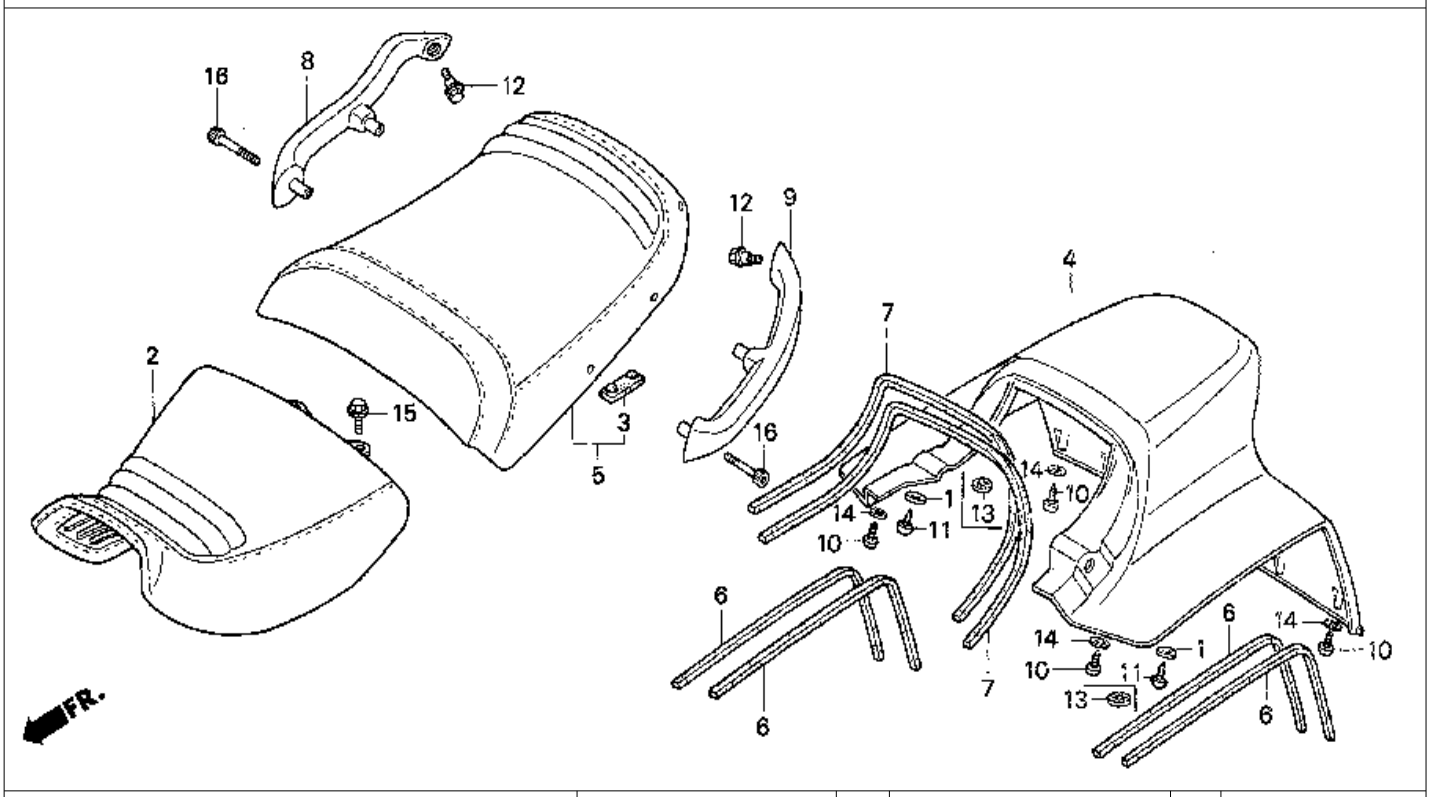

9 = PC800'89	6 = PC800'96								A				
0 = PC800'90	7 = PC800'97			PC800					R				
4 = PC800'94	8 = PC800'98								E			Q	
5 = PC800'95									A			T	
			1	1	1	1	1	1	1			Y	
			9	9	9	9	9	9	9	C			
			8	9	9	9	9	9	9	O	FRAME	R	
Ref.	BLOCK NO.	F-18	9	0	4	5	6	7	8	D	SERIAL NUMBER	E	
No.	DESCRIPTION		9	0	4	5	6	7	8	E	FROM TO	Q	PART NUMBER
12	BOLT, FLANGE (6MM)		9	0	4	5	6	7	8		....	2	90111-197-890
13	NUT, SPEED		9	..	..	..	..	..	..		....	2	90310-GC8-000
14	WASHER, FLAT SCREW		9	..	..	..	..	..	..	A	..... KM001538	12	90503-964-000
			9	..	..	..	..	..	..	AC	..... KM000297	12	90503-964-000
15	BOLT, FLANGE (8X14)		9	0	4	5	6	7	8		....	2	95701-08014-07
16	BOLT, FLANGE (8X50)		9	0	4	5	6	7	8		....	4	96700-08050-17

 © AMERICAN HONDA MOTOR CO. INC. 1997

FUEL TANK

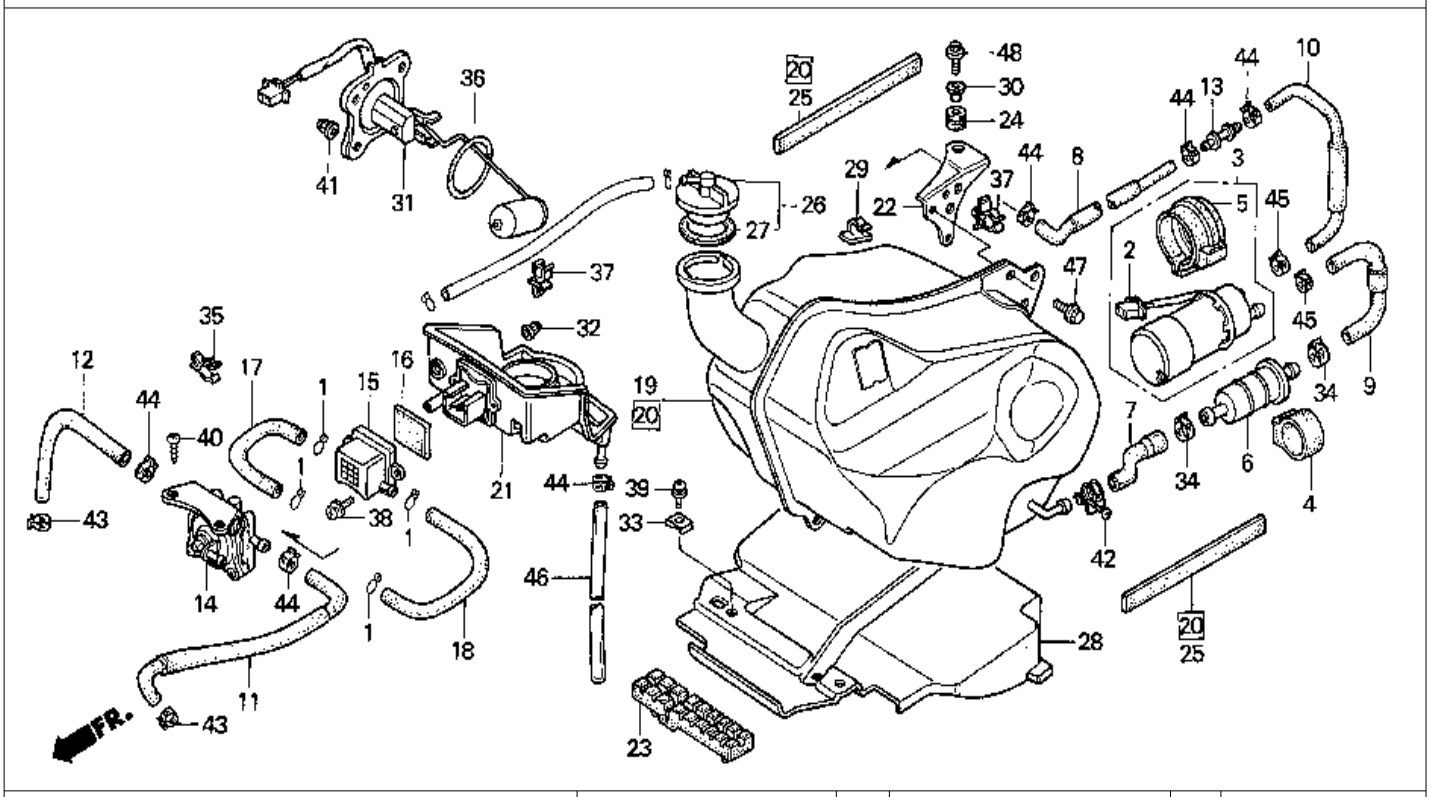

9 = PC800'89	6 = PC800'96												
0 = PC800'90	7 = PC800'97												
4 = PC800'94	8 = PC800'98												
5 = PC800'95													
			PC800							AREA			QTY
			1989	1990	1994	1995	1996	1997	1998	CODE	FRAME		REQ
Ref. No.	BLOCK NO. F-19 DESCRIPTION		9	0	4	5	6	7	8		SERIAL FROM	NUMBER TO		PART NUMBER
1	CLIP, BREATHER TUBE		9	0	4	5	6	7	8		.....	.....	4	15772-292-010
2	PUMP ASSY., FUEL		9	0	..	..	..	..	..		.....	.....	1	16710-MR5-005
	PUMP ASSY., FUEL		..	..	4	..	..	..	..		.....	.....	1	16710-MR5-831
	PUMP ASSY., FUEL		..	..	..	5	6	7	8		.....	.....	1	16710-MR5-A21
3	PUMP ASSY., FUEL		..	..	..	5	6	7	..		.....	.....	1	16710-MR5-305
4	HOLDER, STRAINER		9	0	4	5	6	7	8		.....	.....	1	16711-MF2-000
5	RUBBER, FUEL PUMP SHOCK		9	0		5	6	7	8		.....	.....	1	16711-ML7-000
	RUBBER, FUEL PUMP SHOCK		..	..	4	..	..	..	..		.....	.....	1	16711-MR1-830
6	STRAINER COMP., FUEL		9	0	4	5	6	7	8		.....	.....	1	16900-MG8-003
7	TUBE A, FUEL		9	0	4	5	6	7	8		.....	.....	1	16951-MR5-000
8	TUBE B, FUEL		9	0	4	5	6	7	8		.....	.....	1	16952-MR5-000
9	TUBE C, FUEL		9	0	..	..	..	..	..		.....	.....	1	16953-MR5-000
	TUBE C, FUEL		..	..	4	5	6	7	8		.....	.....	1	16953-MR5-830
10	TUBE D, FUEL		9	0	..	..	..	..	..		.....	.....	1	16954-MR5-000
	TUBE D, FUEL		..	..	4	5	6	7	8		.....	.....	1	16954-MR5-830
11	TUBE E, FUEL		9	0	4	5	6	7	8		.....	.....	1	16961-MR5-000

 © AMERICAN HONDA MOTOR CO. INC. 1997

FUEL TANK

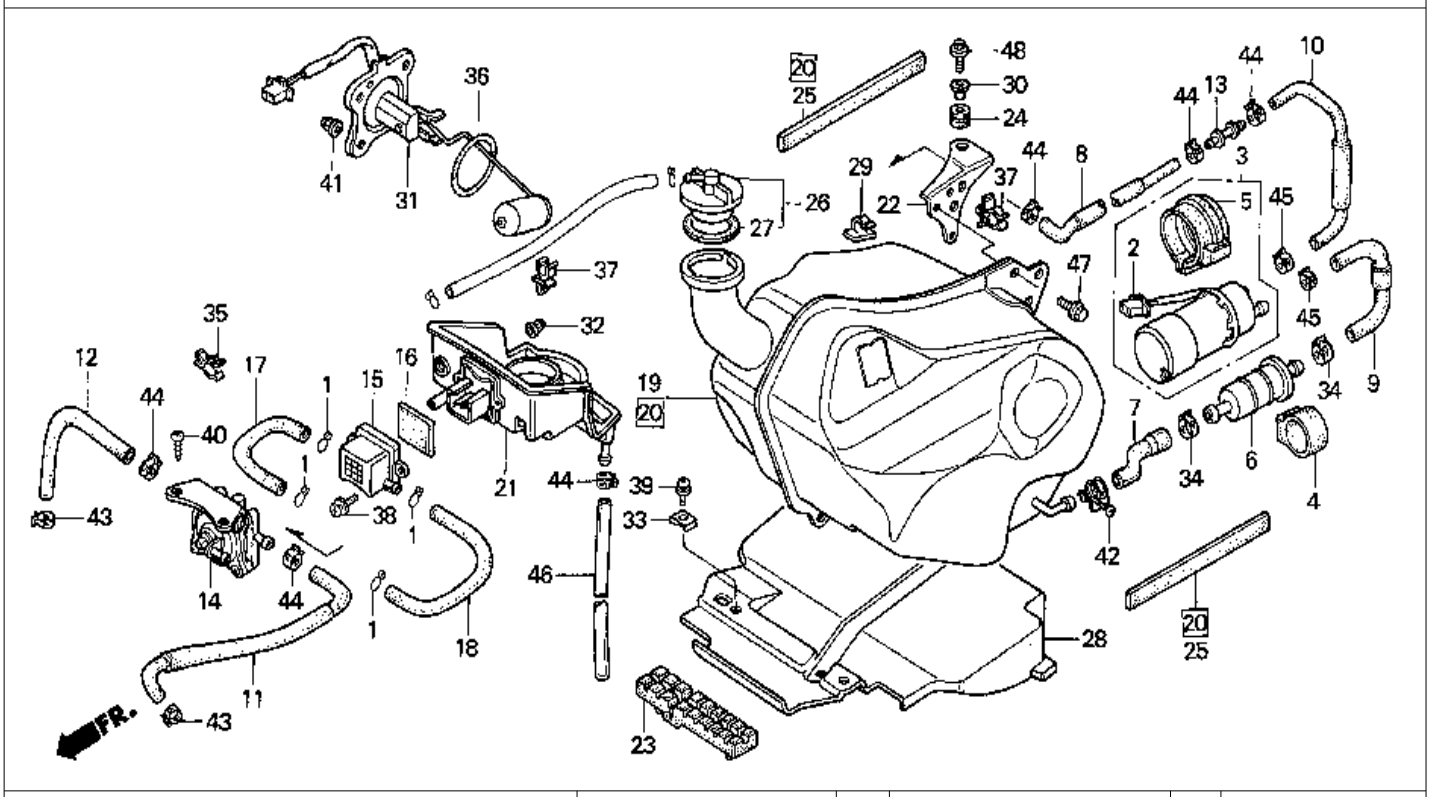

9 = PC800'89	6 = PC800'96								A				
0 = PC800'90	7 = PC800'97		PC800						R				
4 = PC800'94	8 = PC800'98								E			Q	
5 = PC800'95									A			T	
			1	1	1	1	1	1				Y	
			9	9	9	9	9	9	C				
			8	9	9	9	9	9	O	FRAME		R	
Ref.	BLOCK NO.	F-19	9	0	4	5	6	7	8	D	SERIAL	NUMBER	E	
No.	DESCRIPTION		9	0	4	5	6	7	8	E	FROM	TO	Q	PART NUMBER
12	TUBE F, FUEL		9	0	4	5	6	7	8		.....	.....	1	16962-MR5-000
13	JOINT, FUEL TUBE		9	0	4	5	6	7	8		.....	.....	1	16966-MR5-000
14	PETCOCK ASSY., AUTO		9	0	4	5	6	7	8		.....	.....	1	16970-MR5-000
15	COVER, SUB-AIR CLEANER		9	0	4	5	6	7	8		.....	.....	1	17251-MN8-000
16	FILTER, SUB-AIR CLEANER		9	0	4	5	6	7	8		.....	.....	1	17252-MN8-000
17	TUBE, R. SUB-AIR CLEANER		9	0	4	5	6	7	8		.....	.....	1	17253-MR5-000
18	TUBE, L. SUB-AIR CLEANER		9	0	4	5	6	7	8		.....	.....	1	17254-MR5-000
19	TANK COMP., FUEL		9	0	..	..	..	..	..		.....	.....	1	17510-MR5-000
20	TANK COMP., FUEL		..	..	4	5	6	7	8		.....	.....	1	17510-MR5-870
21	TRAY, FUEL CAP		9	0	4	5	6	7	8		.....	.....	1	17521-MR5-000
22	STAY, RR. FUEL TANK		9	0	4	5	6	7	8		.....	.....	1	17525-MR5-000
23	RUBBER, FUEL TANK SETTING		9	0	4	5	6	7	8		.....	.....	1	17555-MR5-000
24	RUBBER, RR. FUEL TANK		9	0	4	5	6	7	8		.....	.....	1	17556-MR5-000
25	TAPE, PROTECTOR		..	..	4	5	6	7	8		.....	.....	2	17558-MR5-870
26	CAP COMP., FUEL FILLER		9	0	4	5	6	7	8	A	.....	.....	1	17670-MN5-003
	CAP COMP., FUEL FILLER		9	0	4	5	6	7	8	AC	.....	.....	1	17670-MN5-741

97 © AMERICAN HONDA MOTOR CO. INC. 1997 G1

FUEL TANK

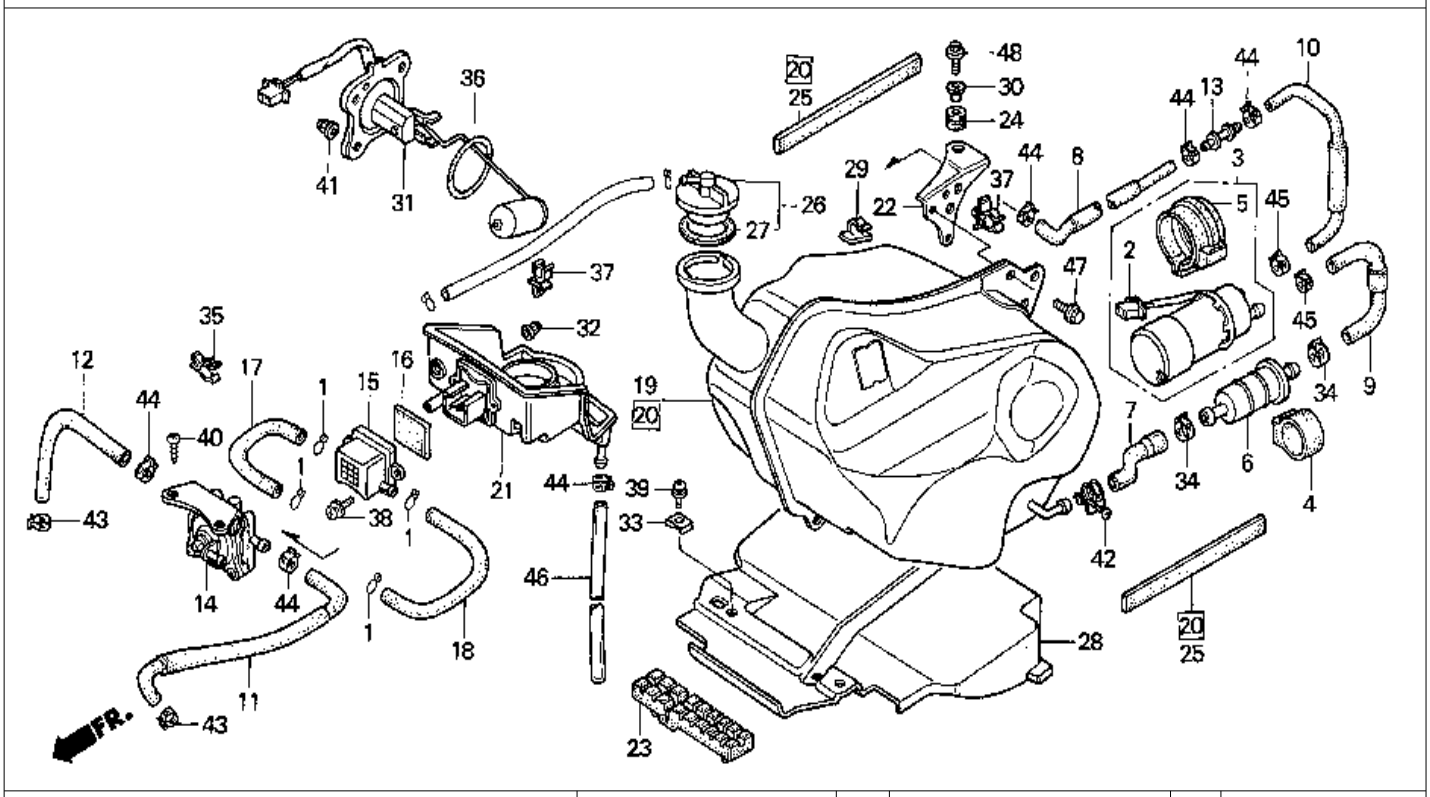

9 = PC800'89	6 = PC800'96												
0 = PC800'90	7 = PC800'97												
4 = PC800'94	8 = PC800'98												
5 = PC800'95													
			PC800							A R E A			Q T Y
			1 9 8 9	1 9 9 0	1 9 9 4	1 9 9 5	1 9 9 6	1 9 9 7	1 9 9 8	C O D E	FRAME		R E
Ref. No.	BLOCK NO. F-19 DESCRIPTION		9	0	4	5	6	7	8		SERIAL FROM	NUMBER TO	Q	PART NUMBER
27	GASKET, FUEL FILLER CAP		9	0	4	5	6	7	8		.....	.....	1	17682-679-013
28	PLATE,FUEL TANK HEAT GUARD		9	0	4	5	6	7	8		.....	.....	1	19630-MR5-000
29	CLAMP, TUBE		9	0	4	5	6	7	8		.....	.....	1	32912-MR5-000
30	COLLAR,METER STAY MOUNTING		9	0	4	5	6	7	8		.....	.....	1	37107-KN6-960
31	FUEL UNIT		9	..	..	..	..	..	..		.....	.....	1	37800-MR5-008
	FUEL UNIT		9	..	..	..	..	..	..		.....	.....	1	37800-MR5-018
	FUEL UNIT		..	0	4	5	6	7	8		.....	.....	1	37800-MR5-871
32	NUT, FLANGE CAP (5MM)		9	0	4	5	6	7	8		.....	.....	2	90167-SA0-980
33	NUT, SPRING (5MM)		9	0	4	5	6	7	8		.....	.....	2	90320-HB9-000
34	CLAMP, TUBE (13.8) (D)		9	0	4	5	6	7	8		.....	.....	2	90682-MR5-000
35	CLIP, TUBE (14MM)		..	0	..	..	..	..	..	A	LM102467	.....	1	91105-MR5-870
			..	..	4	5	6	7	8		.....	.....	1	91105-MR5-870
36	O-RING (39.5X5)		9	0	4	5	6	7	8		.....	.....	1	91305-MC7-000
37	CLIP A, FUEL HOSE		9	0	4	5	6	7	8		.....	.....	2	91405-750-800
38	SCREW-WASHER (5X14)		9	0	4	5	6	7	8		.....	.....	2	93891-05014-07
39	SCREW-WASHER (5X12)		9	0	4	5	6	7	8		.....	.....	2	93892-05012-08
40	SCREW, TAPPING (5X16)		9	0	4	5	6	7	8		.....	.....	2	93903-25310

97 © AMERICAN HONDA MOTOR CO. INC. 1997 G1

FUEL TANK

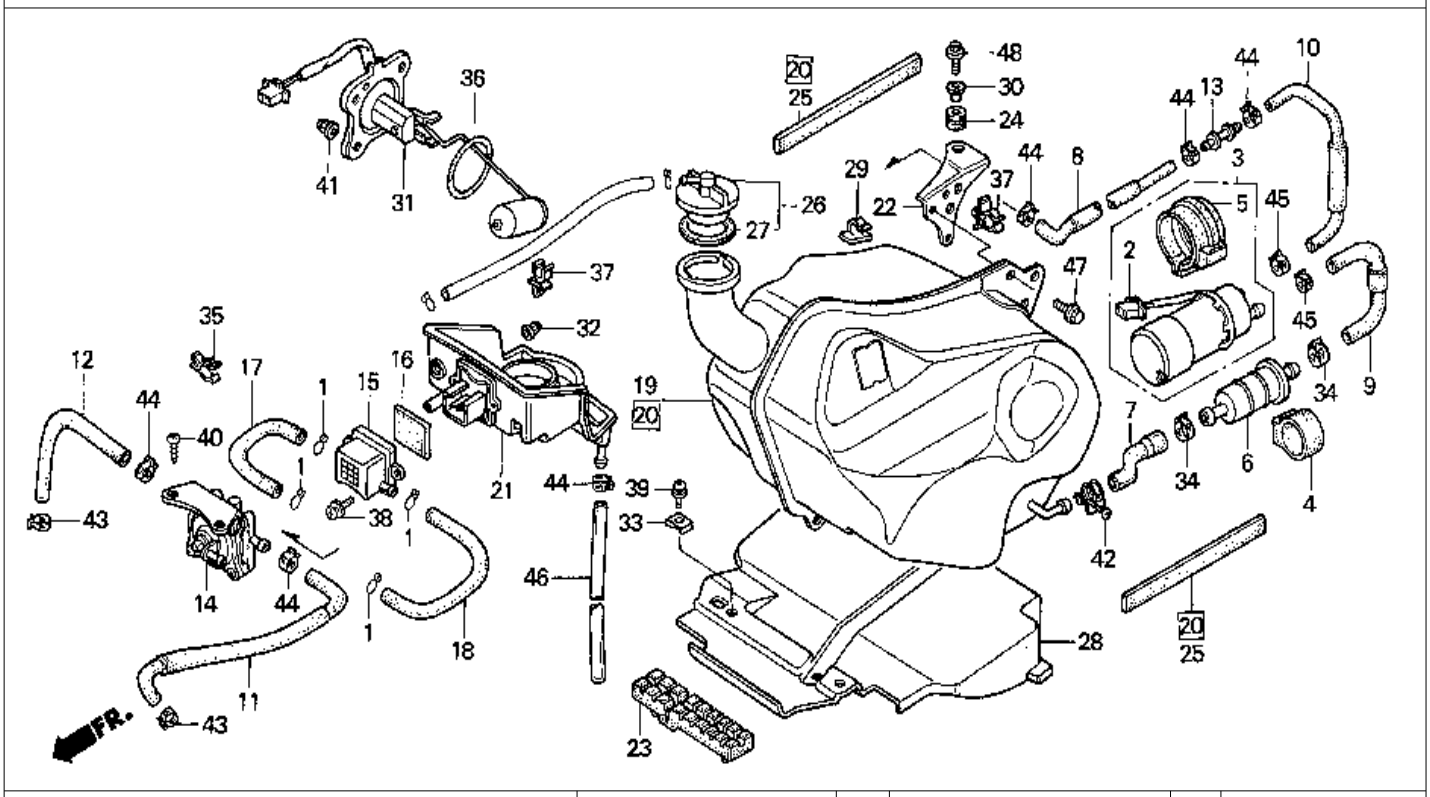

9 = PC800'89	6 = PC800'96								A				
0 = PC800'90	7 = PC800'97		PC800						R				
4 = PC800'94	8 = PC800'98								E			Q	
5 = PC800'95									A			T	
			1	1	1	1	1	1				Y	
			9	9	9	9	9	9	C				
			8	9	9	9	9	9	O	FRAME		R	
Ref.	BLOCK NO.	F-19	9	0	4	5	6	7	8	D	SERIAL	NUMBER	E	
No.	DESCRIPTION		9	0	4	5	6	7	8	E	FROM	TO	Q	PART NUMBER
41	NUT, CAP (6MM)		9	0	4	5	6	7	8		.....	.....	4	94021-06000-0S
	NUT, CAP (6MM)		9	0	4	5	6	7	8		.....	.....	4	94021-06020
	NUT, CAP (6MM)		9	0	4	5	6	7	8		.....	.....	4	94021-06020-0S
	NUT, CAP (6MM)		9	0	4	5	6	7	8		.....	.....	4	94022-06020
42	CLIP A13, TUBE		9	0	4	5	6	7	8		.....	.....	1	95002-01130
43	CLIP, TUBE		9	0	4	5	6	7	8		.....	.....	2	95002-41000-08
44	CLIP, TUBE (D12)		9	0	4	5	6	7	8		.....	.....	6	95002-41200-08
45	CLIP, TUBE (D12)		9	0	..	..	..	..	..		.....	.....	2	95002-41200-08
	CLAMP, TUBE (13.8) (D)		..	..	4	5	6	7	8		.....	.....	2	90682-MR5-000
46	BULK HOSE, VINYL (8X12X8000)													
	(8X12X660)		9	0	4	5	6	7	8		.....	.....	1	95003-23008-60M
47	BOLT, FLANGE (6X12)		9	0	4	5	6	7	8		.....	.....	2	95701-06012-00
48	BOLT, FLANGE (8X25)		9	0	4	5	6	7	8		.....	.....	1	95701-08025-08

 © AMERICAN HONDA MOTOR CO. INC. 1997

AIR CLEANER

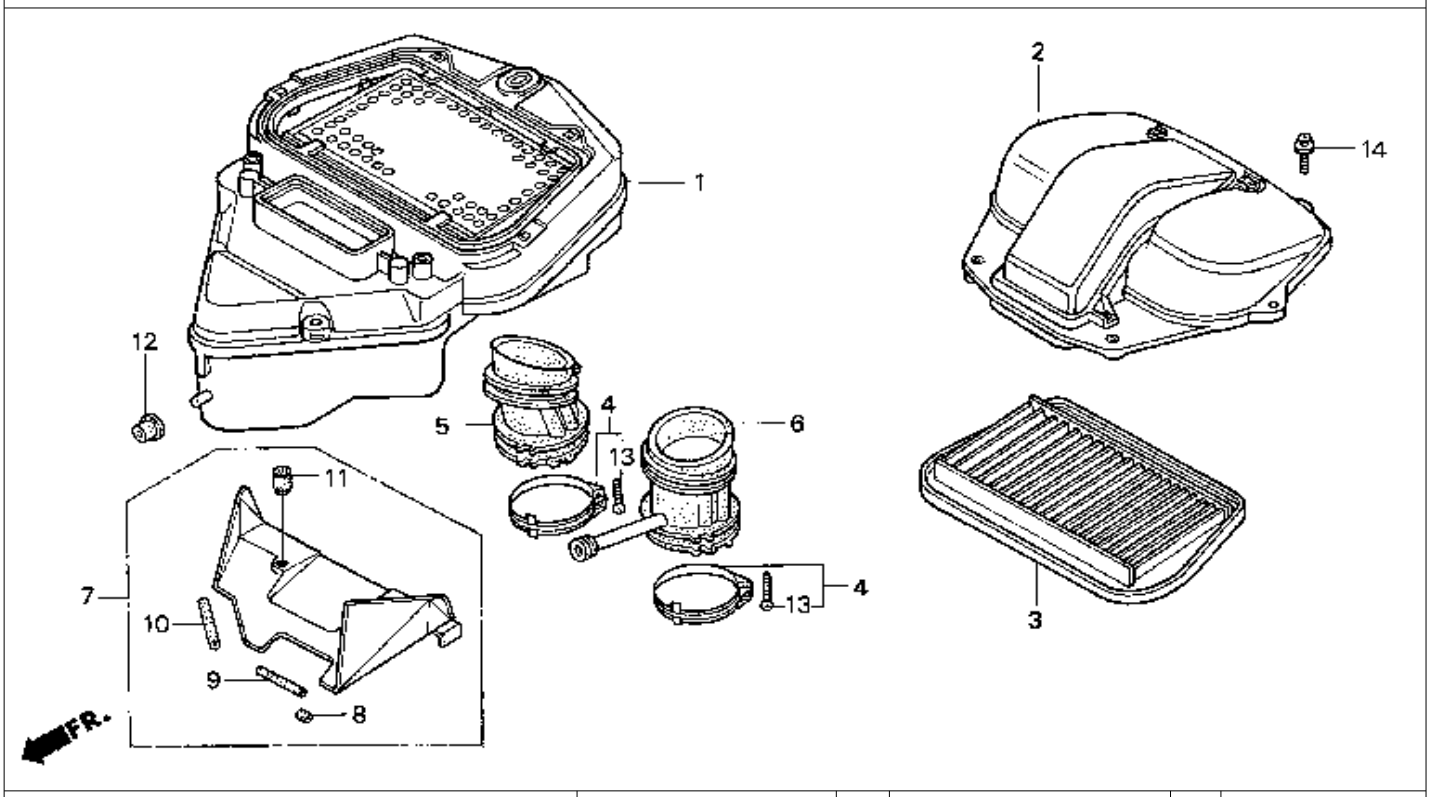

9 = PC800'89 6 = PC800'96
0 = PC800'90 7 = PC800'97
4 = PC800'94 8 = PC800'98
5 = PC800'95

Ref. No.	BLOCK NO. F-20 / DESCRIPTION	1989	1990	1994	1995	1996	1997	1998	AREA CODE	FRAME SERIAL NUMBER FROM		TO	QTY REQ	PART NUMBER
1	HOUSING, AIR CLEANER	9	0	4	5	6	7	8		.....		.....	1	17210-MR5-000
2	COVER, AIR CLEANER	9	0	4	5	6	7	8		.....		.....	1	17213-MR5-000
3	ELEMENT, AIR CLEANER	9	0	4	5	6	7	8		.....		.....	1	17230-MR5-000
4	BAND A, CONNECTING TUBE	9	0	4	5	6	7	8		.....		.....	2	17254-MM8-000
5	TUBE, R. AIR CLEANER CONNECTING	9	0	4	5	6	7	8		.....		.....	1	17257-MR5-000
6	TUBE, L. AIR CLEANER CONNECTING	9	0	4	5	6	7	8		.....		.....	1	17258-MR5-000
7	PLATE, AIR CLEANER DUCT	9	0	4	5	6	7	8		.....		.....	1	19614-MR5-000
8	RUBBER, STOPPER (B)	9	0	4	5	6	7	8		.....		.....	1	19618-MR5-300
9	RUBBER, STOPPER (A)	9	0	4	5	6	7	8		.....		.....	1	19619-MR5-300
10	GUARD, HARNESS	9	0	4	5	6	7	8		.....		.....	1	19635-MR5-300
11	RUBBER B, BATTERY HOLDER	9	0	4	5	6	7	8		.....		.....	2	50348-HA7-670
12	BOOT, HEADLIGHT BRACKET	9	0	4	5	6	7	8		.....		.....	1	61312-149-300
13	SCREW, PAN (4X20)	9	0	4	5	6	7	8		.....		.....	2	93500-04020-0G
14	SCREW-WASHER (5X16)	9	0	4	5	6	7	8		.....		.....	6	93891-05016-00
	SCREW-WASHER (5X16)	9	0	4	5	6	7	8		.....		.....	6	93891-05016-10

 © AMERICAN HONDA MOTOR CO. INC. 1997

SIDE COVER

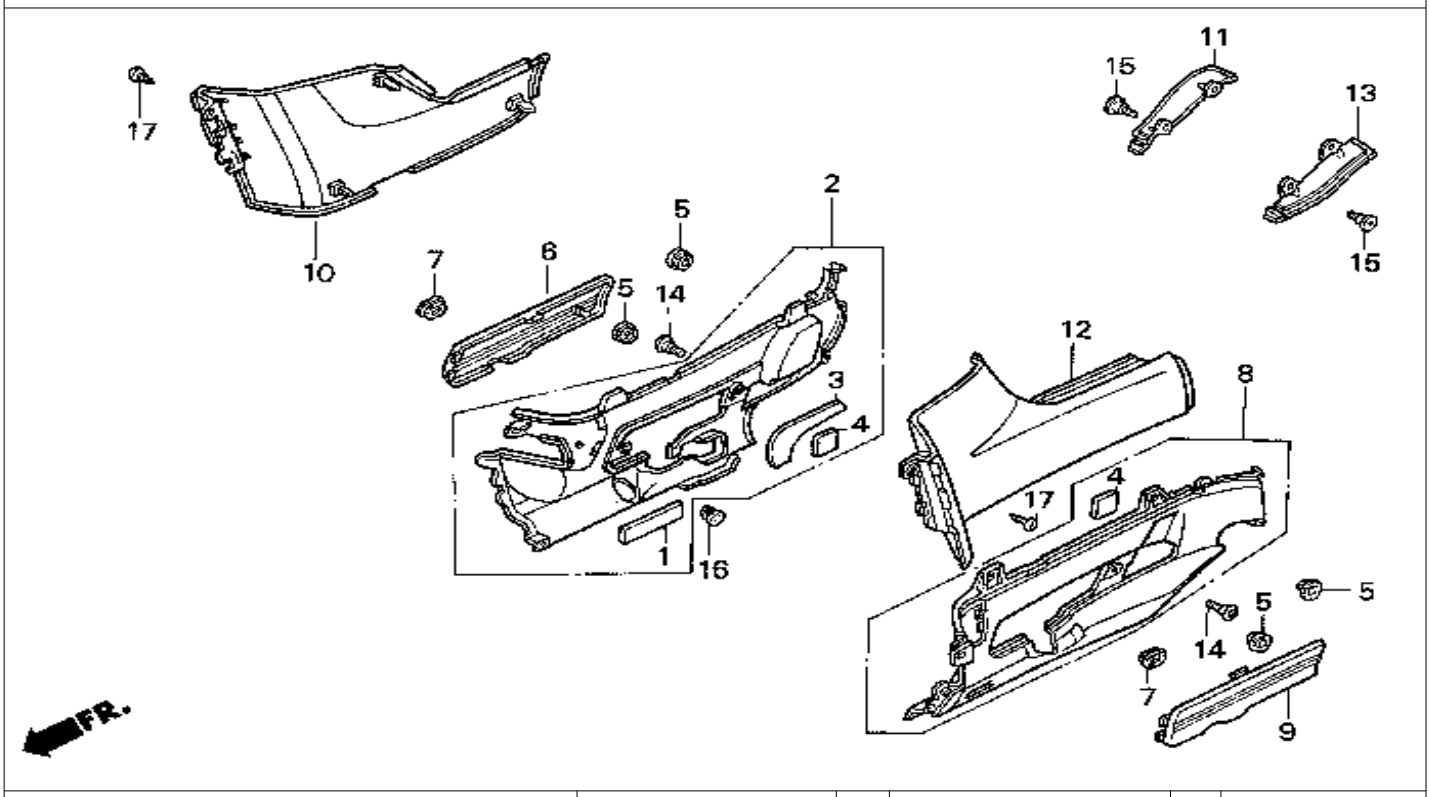

9 = PC800'89 6 = PC800'96
0 = PC800'90 7 = PC800'97
4 = PC800'94 8 = PC800'98
5 = PC800'95

Ref. No.	BLOCK NO. F-21 / DESCRIPTION	1998 99	1999 00	1999 04	1999 05	1999 06	1999 07	1999 08	AREA CODE	FRAME SERIAL FROM		NUMBER TO	QTY REQ	PART NUMBER
1	RUBBER, FUEL TANK LOWER	9	..	..	..	..	..	..	A	KM002419		.....	1	17505-KV0-000
		9	..	..	..	..	..	..	AC	KM000731		.....	1	17505-KV0-000
		..	0	4	5	6	7	8		.....		.....	1	17505-KV0-000
2	COVER, R. (LOWER) *NH253M* (TYPE1) (OCEAN GREY)	9	..	..	..	..	..	..		.....		.....	1	83520-MR5-000ZA
	COVER, R. (LOWER) *NH292M* (TYPE3) (GRIFFEN GREY)	..	0	4	5	..	..	..		.....		.....	1	83520-MR5-000ZC
	COVER, *NH292M* (R/L) (GRIFFEN GREY)	..	0	4	5	..	..	..		.....		.....	1	83520-MR5-000ZE
	COVER, R. (LOWER) *NH197MU* (KARAKORUM GREY)	..	..	..	..	6	..	..		.....		.....	1	83520-MR5-000ZF
	COVER, R. (LOWER) *NH340R*	..	..	..	..	..	7	8		.....		.....	1	83520-MR5-A30ZA
3	SHEET, R. COVER (LOWER)	9	0	4	5	6	7	8		.....		.....	1	83521-MR5-300
4	PROTECTOR, COVER (LOWER	..	..	4	5	6	7	8		.....		.....	2	85321-MR5-870
5	GROMMET, STEP COVER	9	0	4	5	6	7	8		.....		.....	4	85325-MR5-000
6	COVER COMP., R. STEP HOLDER	9	0	4	5	6	..	..		.....		.....	1	83530-MR5-000

 © AMERICAN HONDA MOTOR CO. INC. 1997

SIDE COVER

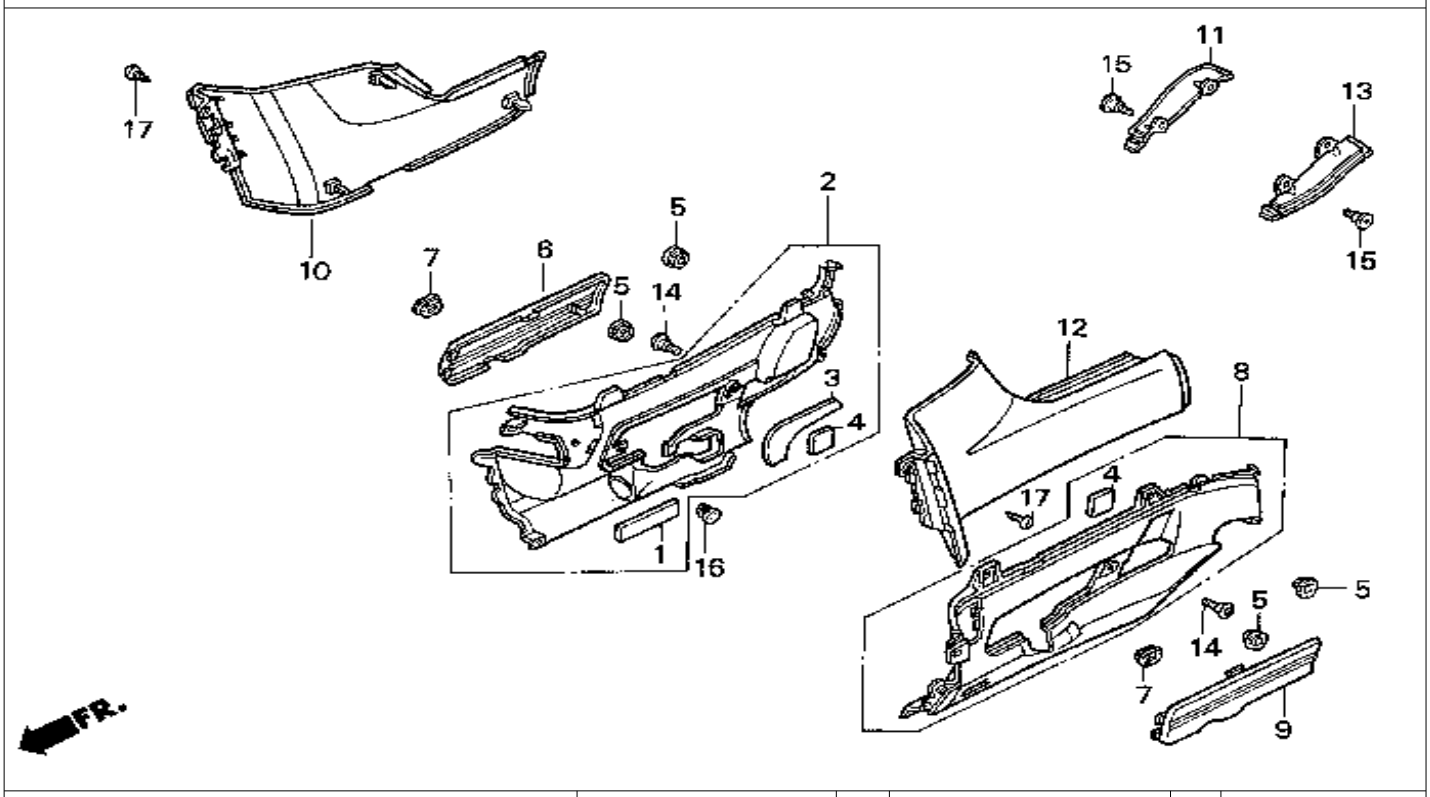

9 = PC800'89 6 = PC800'96
0 = PC800'90 7 = PC800'97
4 = PC800'94 8 = PC800'98
5 = PC800'95

Ref. No.	BLOCK NO. F-21 DESCRIPTION	1989 9	1990 0	1994 4	1995 5	1996 6	1997 7	1998 8	AREA CODE	FRAME SERIAL FROM		NUMBER TO	QTY REQ	PART NUMBER
6	COVER COMP., R. STEP HOLDER	..	..	..	..	..	7	8		.....		.....	1	83530-MR5-A30
7	GROMMET, STEP COVER	9	0	4	5	6	7	8		.....		.....	2	83551-MA6-000
8	COVER, L. (LOWER) *NH253M* (TYPE1)													
	(OCEAN GREY)	9	..	..	..	..	..	..		.....		.....	1	83570-MR5-000ZA
	COVER, L. (LOWER) *NH292M* (TYPE3)													
	(GRIFFEN GREY)	..	0	4	5	..	..	..		.....		.....	1	83570-MR5-000ZC
	COVER, L. (LOWER) *NH292M* (TYPE3)													
	(GRIFFEN GREY)	..	0	4	5	..	..	..		.....		.....	1	83570-MR5-000ZE
	COVER, L. (LOWER) *NH197MU*													
	(KARAKORUM GREY)	..	..	..	..	6	..	..		.....		.....	1	83570-MR5-000ZF
	COVER, L. (LOWER) *NH340R*	..	..	..	..	..	7	8		.....		.....	1	83570-MR5-A30ZA
9	COVER COMP., L. STEP HOLDER	9	0	4	5	6	..	..		.....		.....	1	83580-MR5-000
	COVER COMP., L. STEP HOLDER	..	..	..	..	..	7	8		.....		.....	1	83580-MR5-A30
10	COVER, R. SIDE *NH251P*													
	(PACIFIC WHITE)	9	..	..	..	..	..	..		.....		.....	1	83600-MR5-00ZA

 © AMERICAN HONDA MOTOR CO. INC. 1997

SIDE COVER

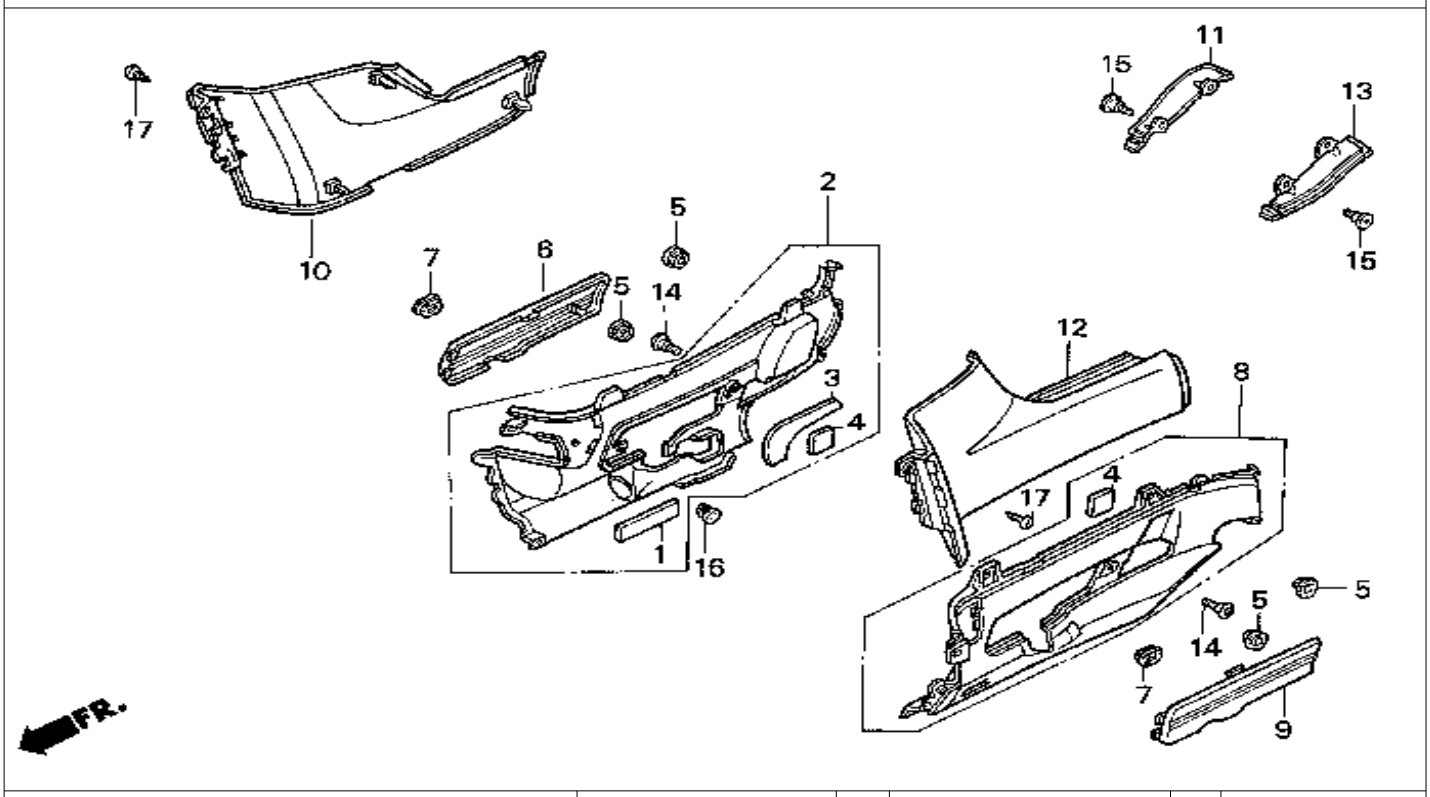

9 = PC800'89 6 = PC800'96
0 = PC800'90 7 = PC800'97
4 = PC800'94 8 = PC800'98
5 = PC800'95

Ref. No.	BLOCK NO. F-21 / DESCRIPTION	1989 9	1990 0	1994 4	1995 5	1996 6	1997 7	1998 8	AREA CODE	FRAME SERIAL FROM	FRAME NUMBER TO	QTY REQ	PART NUMBER
10	COVER, R. SIDE *R101CU*												
	(CANDY GLORY RED)	..	0	..	..	..	..	..		.....	.....	1	83600-MR5-00ZC
	COVER, R. SIDE *NH1Z*												
	(BLACK-Z)	..	..	4	5	..	..	..		.....	.....	1	83600-MR5-00ZE
	COVER, R. SIDE *R201*												
	(MAGNA RED)	..	..	..	..	6	7	8		.....	.....	1	83600-MR5-00ZF
11	COVER B, R. SIDE *NH251P*												
	(PACIFIC WHITE)	9	..	..	..	..	..	..		.....	.....	1	83650-MR5-00ZA
	COVER B, R. SIDE *R101CU*												
	(CANDY GLORY RED)	..	0	..	..	..	..	..		.....	.....	1	83650-MR5-00ZC
	COVER B, R. SIDE *NH1Z*												
	(BLACK-Z)	..	..	4	5	..	..	..		.....	.....	1	83650-MR5-00ZE
	COVER B, R. SIDE *R201*												
	(MAGNA RED)	..	..	..	..	6	7	8		.....	.....	1	83650-MR5-00ZF

 © AMERICAN HONDA MOTOR CO. INC. 1997

SIDE COVER

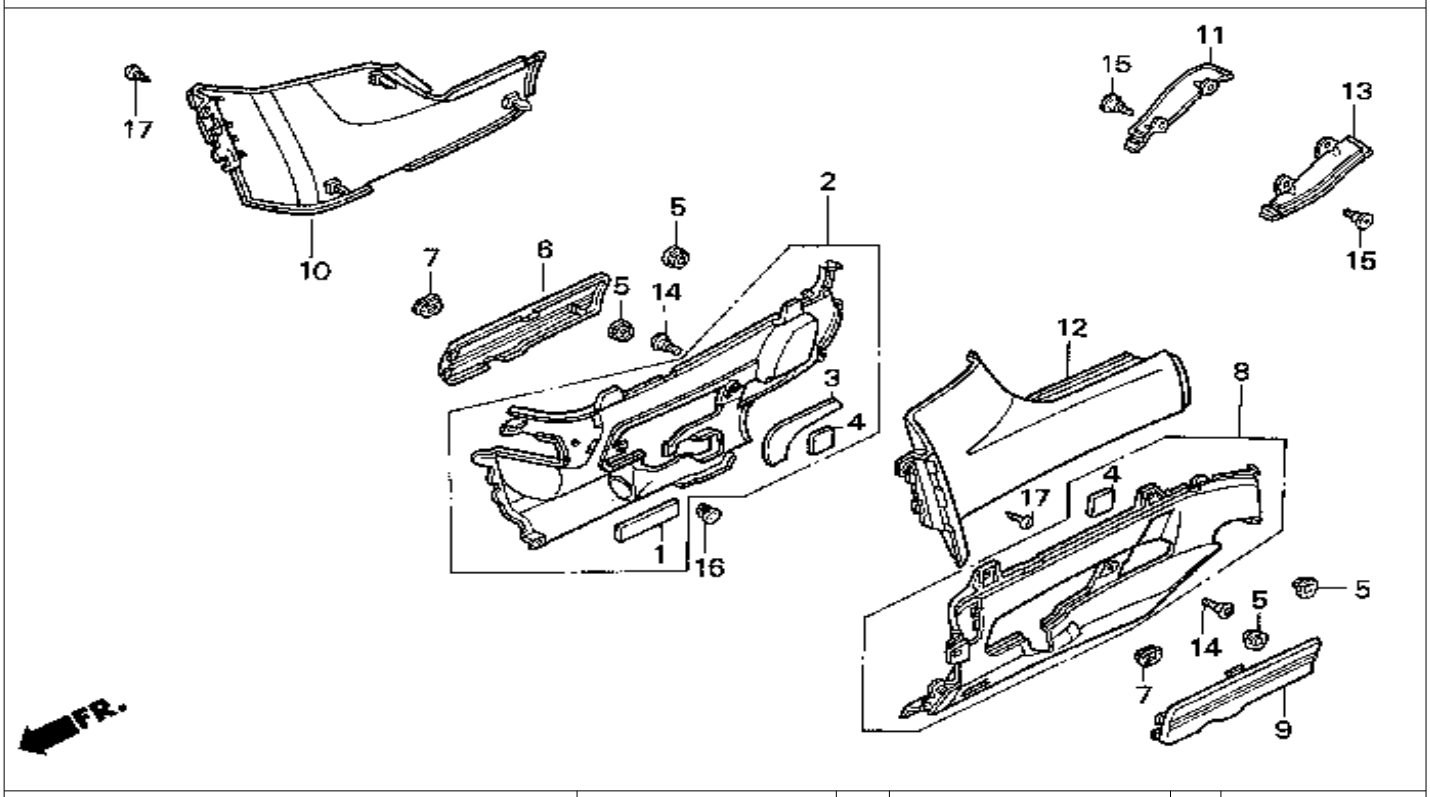

9 = PC800'89 6 = PC800'96
0 = PC800'90 7 = PC800'97
4 = PC800'94 8 = PC800'98
5 = PC800'95

Ref. No.	BLOCK NO. F-21 DESCRIPTION	PC800 1989	1990	1994	1995	1996	1997	1998	AREA CODE	FRAME SERIAL NUMBER FROM	TO	QTY REQ	PART NUMBER
12	COVER, L. SIDE *NH251P*												
	(PACIFIC WHITE)	9	..	..	..	..	..	..		.....	.....	1	83700-MR5-00ZA
	COVER, L. SIDE *R101CU*												
	(CANDY GLORY RED)	..	0	..	..	..	..	..		.....	.....	1	83700-MR5-00ZC
	COVER, L. SIDE *NH1Z*												
	(BLACK-Z)	..	..	4	5	..	..	..		.....	.....	1	83700-MR5-00ZE
	COVER, L. SIDE *R201*												
	(MAGNA RED)	..	..	..	..	6	7	8		.....	.....	1	83700-MR5-00ZF
	COVER B , L. SIDE *NH251P*												
	(PACIFIC WHITE)	9	..	..	..	..	..	..		.....	.....	1	83750-MR5-00ZA
	COVER B, L. SIDE *R101CU*												
	(CANDY GLORY RED)	..	0	..	..	..	..	..		.....	.....	1	83750-MR5-00ZC
	COVER B, L. SIDE *NH1Z*												
	(BLACK-Z)	..	..	4	5	..	..	..		.....	.....	1	83750-MR5-00ZE
	COVER B, L. SIDE *R201*												
	(MAGNA RED)	..	..	..	..	6	7	8		.....	.....	1	83750-MR5-00ZF

 © AMERICAN HONDA MOTOR CO. INC. 1997

SIDE COVER

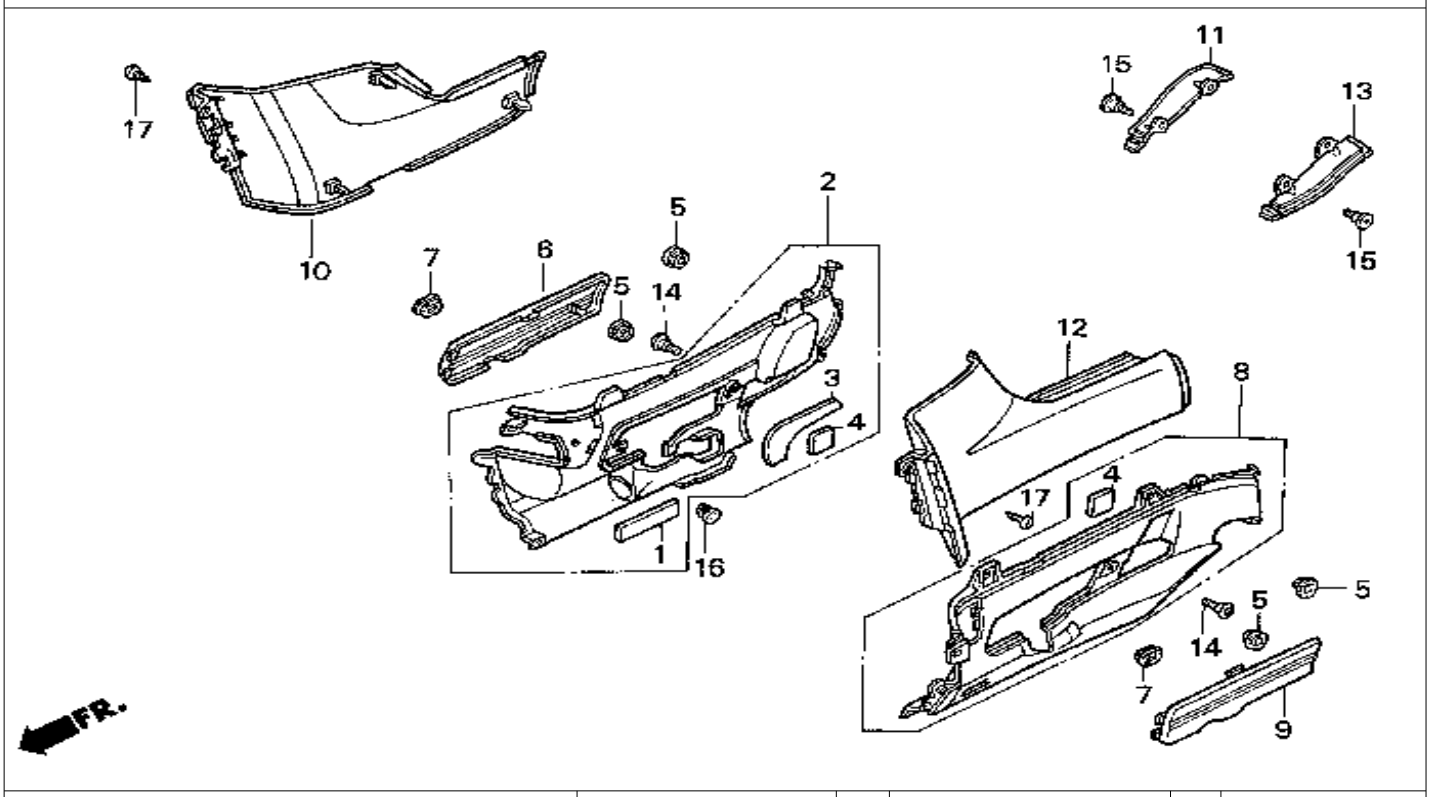

9 = PC800'89 6 = PC800'96
0 = PC800'90 7 = PC800'97
4 = PC800'94 8 = PC800'98
5 = PC800'95

Ref. No.	BLOCK NO. F-21 / DESCRIPTION	1989 / 99	1990 / 00	1994 / 94	1995 / 95	1996 / 96	1997 / 97	1998 / 98	AREA CODE	FRAME SERIAL NUMBER FROM		TO	QTY REQ	PART NUMBER
		PC800												
14	SCREW, PAN (6X14)	9	0	4	5	6	7	8		.....		.....	2	90106-MM4-000
15	SCREW, SPECIAL (6X11)	9	0	4	5	6	7	8		.....		.....	4	90381-MB2-000
16	RUBBER, ENGINE STOPPER	9	0	4	5	6	7	8		.....		.....	1	90572-MR5-000
17	SCREW, TAPPING (5X16)	9	0	4	5	6	7	8		.....		.....	2	93903-25380

 © AMERICAN HONDA MOTOR CO. INC. 1997

MUFFLER

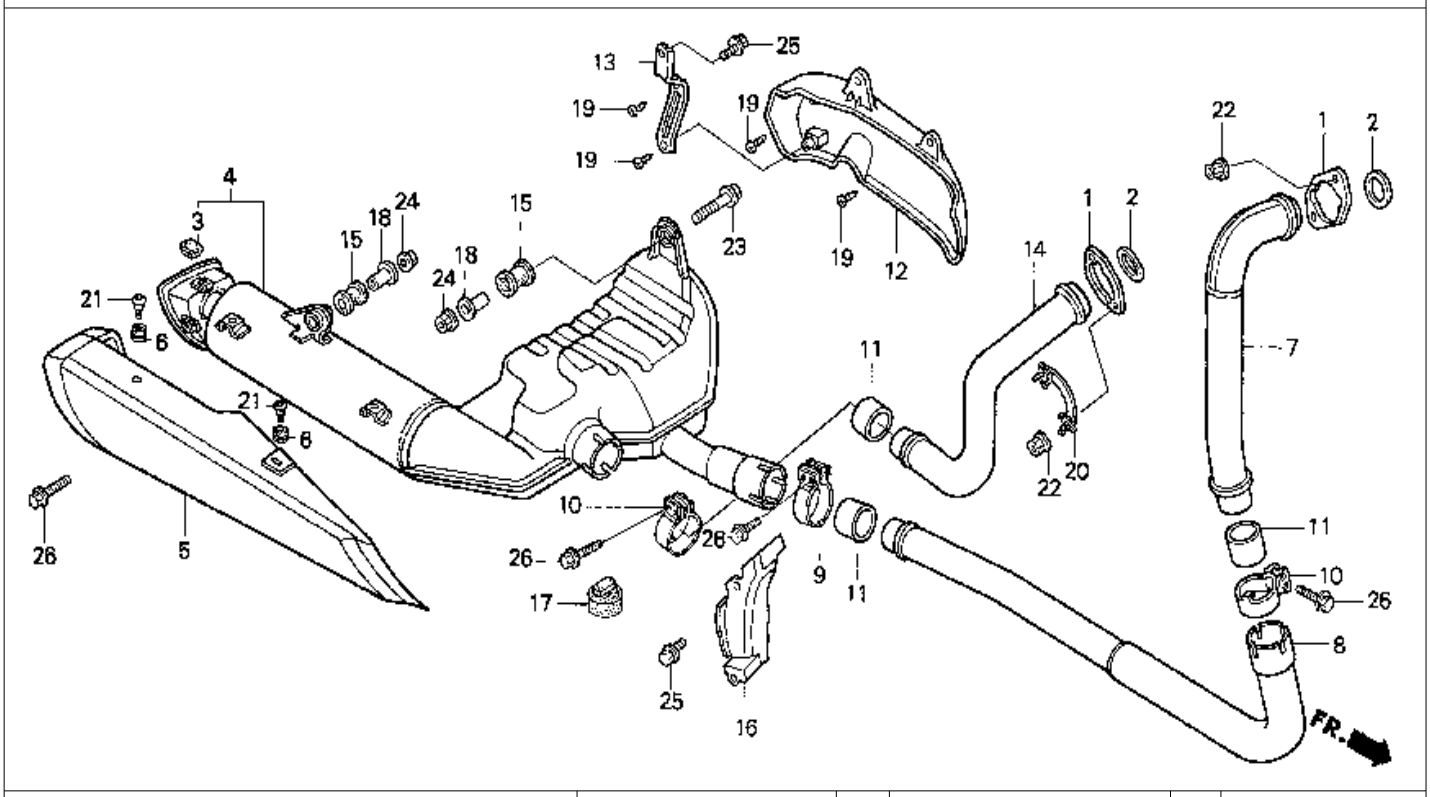

9 = PC800'89	6 = PC800'96								A				
0 = PC800'90	7 = PC800'97			PC800					R				
4 = PC800'94	8 = PC800'98								E			Q	
5 = PC800'95									A			T	
			1	1	1	1	1	1				Y	
			9	9	9	9	9	9	C				
			8	9	9	9	9	9	O	FRAME		R	
Ref.	BLOCK NO.	F-22	9	0	4	5	6	7	8	D	SERIAL	NUMBER	E	
No.	DESCRIPTION		9	0	4	5	6	7	8	E	FROM	TO	Q	PART NUMBER
1	JOINT, EX. GASKET		9	0	4	5	6	7	8		.....	.....	2	18231-MR5-000
2	GASKET, EX.PIPE		9	0	..	..	..	..	..		.....	.....	2	18291-ME9-000
	GASKET, EX.PIPE		9	0	..	..	..	..	..		.....	.....	2	18291-ME9-306
	GASKET, EX.PIPE		9	0	..	..	..	..	..		.....	.....	2	18291-MM8-880
	GASKET, EX.PIPE		..	..	4	5	6	7	8		.....	.....	2	18291-MR5-801
3	RUBBER, PROTECTOR		9	0	4	5	6	7	8		.....	.....	3	18293-MN0-000
4	MUFFLER COMP., EX		9	..	..	..	..	..	..		.....	.....	1	18300-MR5-003
	MUFFLER COMP., EX		9	0	4	5	6	7	8		.....	.....	1	18300-MR5-870
5	COVER, MUFFLER		9	0	4	5	6	7	8		.....	.....	1	18315-MR5-000
6	RUBBER, MUFFLER COVER		9	0	4	5	6	7	8		.....	.....	3	18318-MR5-000
7	PIPE, FR. EX. (A)		9	0	4	5	6	7	8		.....	.....	1	18320-MR5-003
8	PIPE, FR. EX. (B)		9	0	4	5	6	7	8		.....	.....	1	18330-MR5-003
9	BAND, FR. EX. PIPE		9	0	4	5	6	7	8		.....	.....	1	18373-MR5-000
10	BAND, MUFFLER		9	0	4	5	6	7	8		.....	.....	2	18376-KG0-003
11	GASKET, MUFFLER		9	0	4	5	6	7	8		.....	.....	3	18392-MK4-000
12	COVER, L. MUFFLER		9	0	4	5	6	7	8		.....	.....	1	18415-MR5-000

 © AMERICAN HONDA MOTOR CO. INC. 1997

MUFFLER

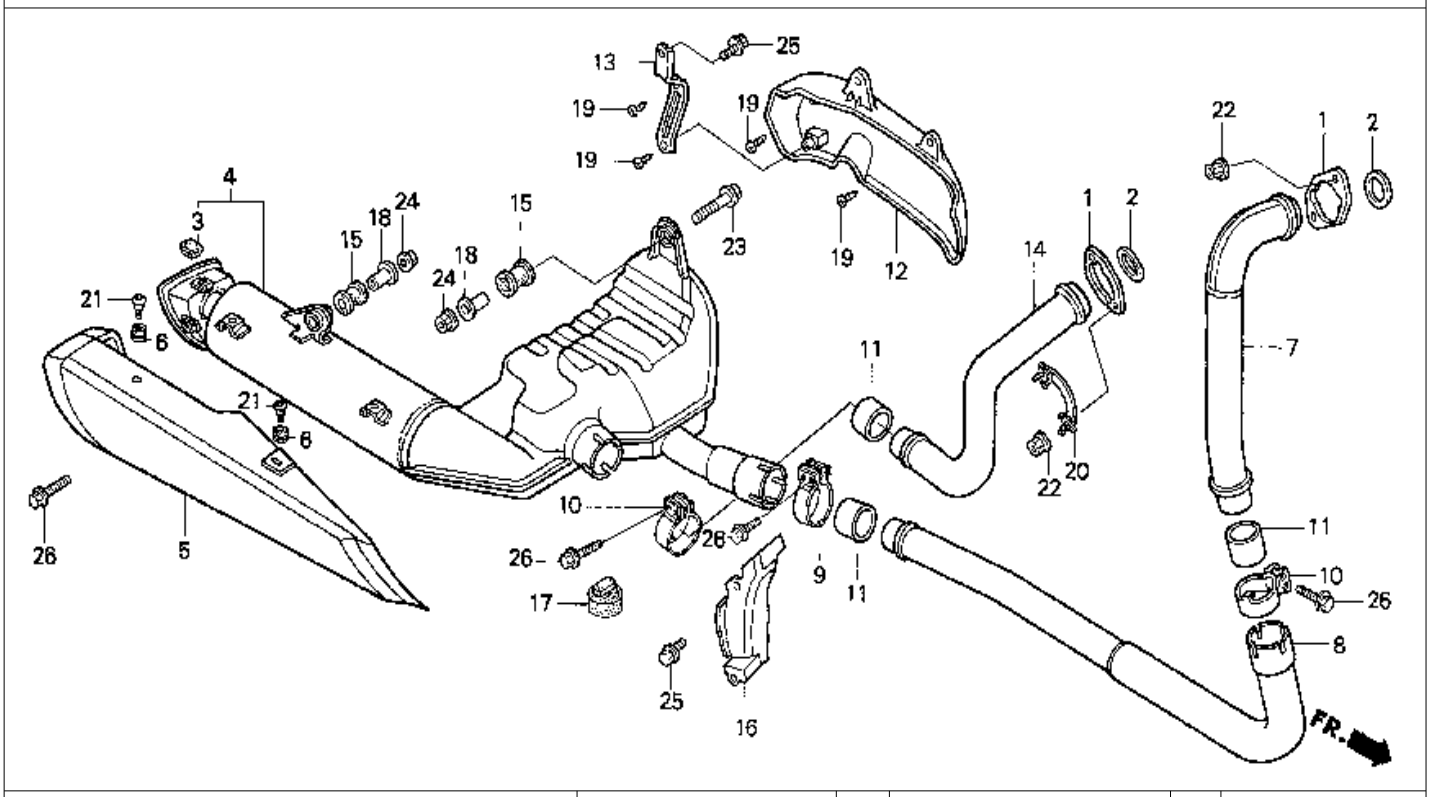

9 = PC800'89	6 = PC800'96								A				
0 = PC800'90	7 = PC800'97		PC800						R				
4 = PC800'94	8 = PC800'98								E			Q	
5 = PC800'95									A			T	
			1	1	1	1	1	1				Y	
			9	9	9	9	9	9	C				
			8	9	9	9	9	9	O	FRAME		R	
Ref.	BLOCK NO.	F-22	9	0	4	5	6	7	8	D	SERIAL	NUMBER	E	
No.	DESCRIPTION		9	0	4	5	6	7	8	E	FROM	TO	Q	PART NUMBER
13	STAY, MUFFLER COVER		9	0	4	5	6	..	..		.....	.....	1	18418-MR5-000
14	PIPE, RR. EX.		9	..	..	..	..	..	..	A	.....	KM000392	1	18420-MR5-003
			9	..	..	..	..	..	..	AC	.....	KM000075	1	18420-MR5-003
	PIPE, RR. EX.		9	..	..	..	..	..	..	A	KM000393	.....	1	18420-MR5-013
			9	..	..	..	..	..	..	AC	KM000076	.....	1	18420-MR5-013
	PIPE, RR. EX.		..	0	4	5	6	7	8		.....	.....	1	18420-MR5-871
15	RUBBER, MUFFLER MOUNTING		9	0	4	5	6	7	8		.....	.....	2	18421-KE8-000
16	COVER, RR. EX. HEAT		9	..	..	..	..	..	..		.....	.....	1	18425-MR5-000
	COVER, RR. EX. HEAT		..	0	4	5	6	7	8		.....	.....	1	18425-MR5-870
17	RUBBER, STAND STOPPER		9	0	4	5	6	7	8		.....	.....	1	50524-MG9-000
18	COLLAR, STEP		9	0	4	5	6	7	8		.....	.....	2	51486-GT3-620
19	SCREW, TAPPING (4X12)		9	0	4	..	..	..	..		.....	.....	4	90101-SA4-000
	SCREW, TAPPING (4X16)		9	0	4	..	..	..	..		.....	.....	4	93913-14280
	SCREW, TAPPING (4X12)		..	..	..	5	6	..	8		.....	.....	4	93903-24380
20	WASHER ASSY., TONGUED		..	0	4	5	6	7	8		.....	.....	1	90107-MR5-870
21	SCREW, PAN (6X14)		9	0	4	5	6	7	8		.....	.....	3	90113-MM5-000

 © AMERICAN HONDA MOTOR CO. INC. 1997

MUFFLER

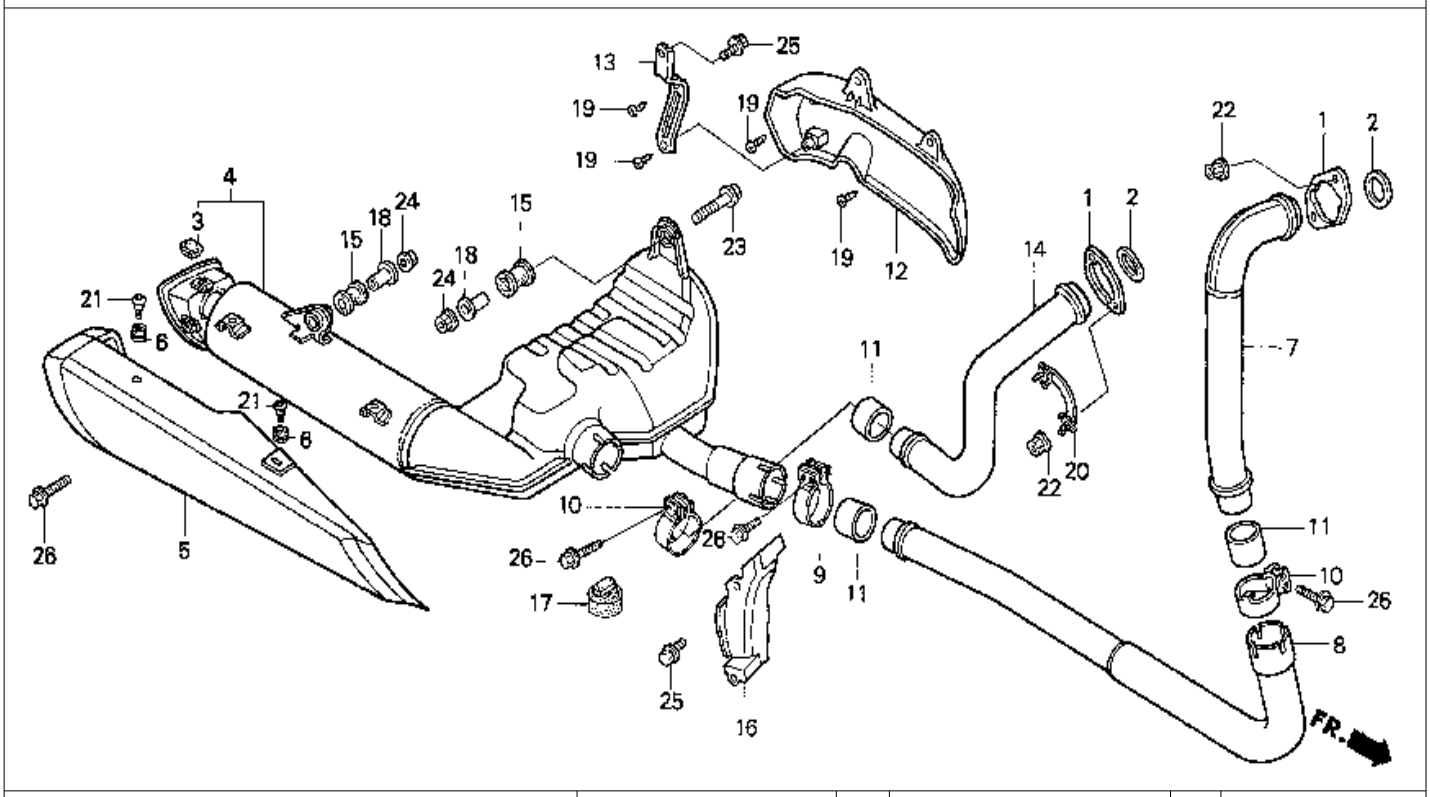

9 = PC800'89	6 = PC800'96							A				
0 = PC800'90	7 = PC800'97		PC800					R				
4 = PC800'94	8 = PC800'98							E			Q	
5 = PC800'95								A			T	
			1	1	1	1	1	1	1		Y	
			9	9	9	9	9	9	9	C		
			8	9	9	9	9	9	9	O	FRAME	R	
Ref.	BLOCK NO.	F-22	9	0	4	5	6	7	8	D	SERIAL NUMBER	E	
No.	DESCRIPTION		9	0	4	5	6	7	8	E	FROM TO	Q	PART NUMBER
22	NUT, FLANGE (8MM)		9	0	4	5	6	7	8		....	4	90309-428-731
23	BOLT-WASHER (8X35)		9	0	4	5	6	7	8		....	1	93404-08035-00
24	NUT, FLANGE (8MM)		9	0	4	5	6	7	8		....	2	94050-08080
25	BOLT, FLANGE (6X12)		9	0	4	5	6	..	..		....	3	95701-06012-08
			..	..	..	..	..	7	8		....	2	95701-06012-08
26	BOLT, FLANGE (8X35)		9	0	4	5	6	7	8		....	7	95701-08035-00

 © AMERICAN HONDA MOTOR CO. INC. 1997

PEDAL

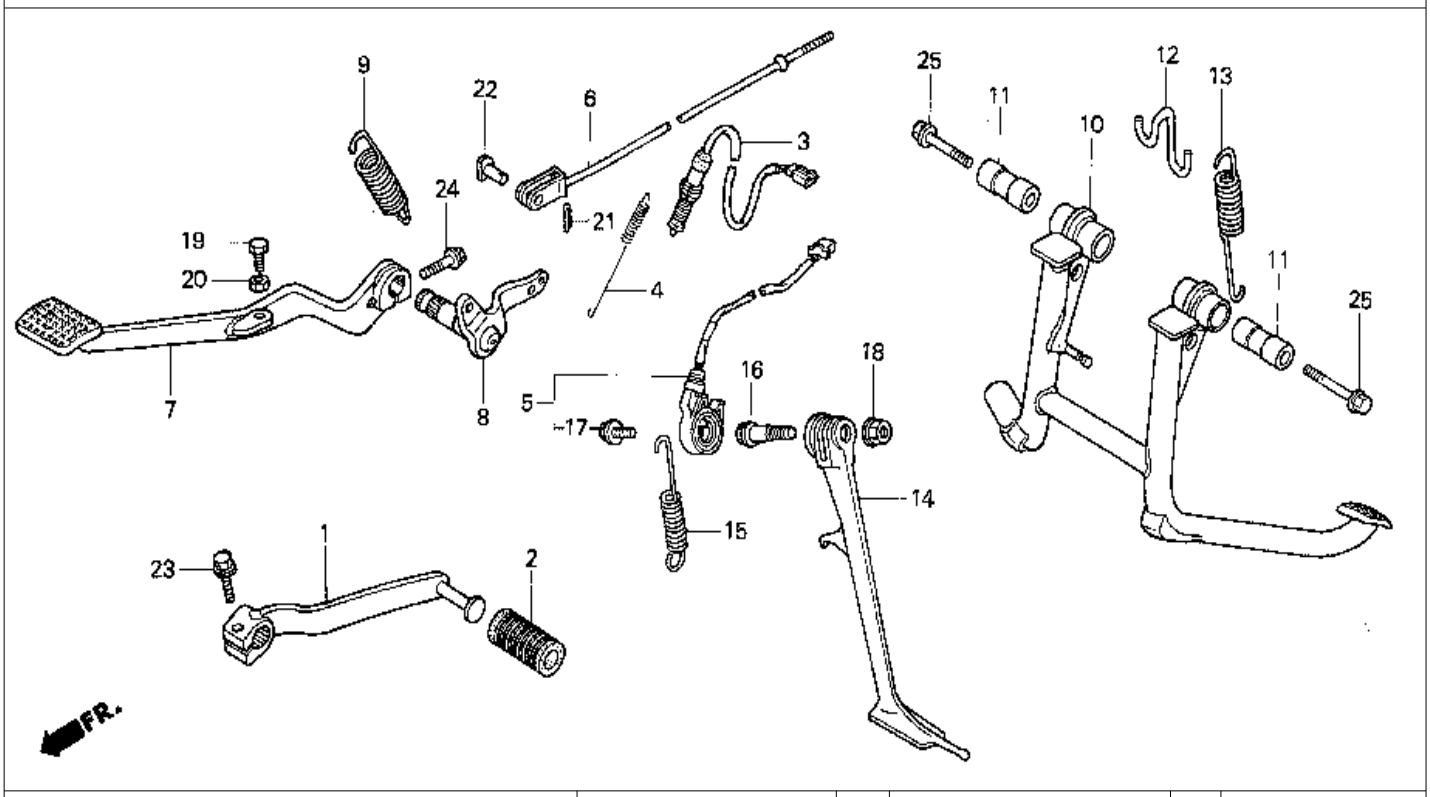

9 = PC800'89 6 = PC800'96
0 = PC800'90 7 = PC800'97
4 = PC800'94 8 = PC800'98
5 = PC800'95

Ref. No.	BLOCK NO. F-23 / DESCRIPTION	PC800 1989	1990	1994	1995	1996	1997	1998	AREA CODE	FRAME SERIAL FROM	FRAME NUMBER TO	QTY REQ	PART NUMBER
1	PEDAL, GEARSHIFT	9	..	..	..	..	..	..		.....	.....	1	24701-MR5-000
	PEDAL, GEARSHIFT	..	0	4	5	6	..	..		.....	.....	1	24701-MR5-870
	PEDAL, GEARSHIFT	..	..	..	..	..	7	8		.....	.....	1	24701-MR5-A30
2	RUBBER, CHANGE PEDAL	9	0	4	5	6	7	8		.....	.....	1	24781-KR3-770
3	SWITCH ASSY., RR. STOP	9	0	4	5	6	7	8		.....	.....	1	35350-MR5-000
4	SPRING, STOP SWITCH	9	0	4	5	6	7	8		.....	.....	1	35357-ML0-000
5	SWITCH SET, SIDE STAND	9	..	..	..	..	..	..		.....	.....	1	35700-MR5-305
	SWITCH ASSY., SIDE STAND	..	0	4	5	6	7	8		.....	.....	1	35700-MR5-870
6	ROD, RR. BRAKE	9	0	4	5	6	7	8		.....	.....	1	43451-MR5-000
7	PEDAL COMP., RR. BRAKE	9	0	4	5	6	..	..		.....	.....	1	46500-MR5-000
	PEDAL COMP., RR. BRAKE	..	..	..	..	..	7	8		.....	.....	1	46500-MR5-A30
8	SPINDLE COMP., RR. BRAKE	9	0	4	5	6	7	8		.....	.....	1	46505-MR5-000
9	SPRING, RR. BRAKE	9	0	4	5	6	7	8		.....	.....	1	46514-415-000
10	STAND COMP., MAIN	9	0	4	5	6	7	8		.....	.....	1	50500-MR5-000
11	COLLAR, MAIN STAND	9	0	4	5	6	7	8		.....	.....	2	50503-MR5-300
12	HOOK, MAIN STAND SPRING	9	..	..	..	..	..	..		.....	.....	1	50504-MR5-000

 © AMERICAN HONDA MOTOR CO. INC. 1997

PEDAL

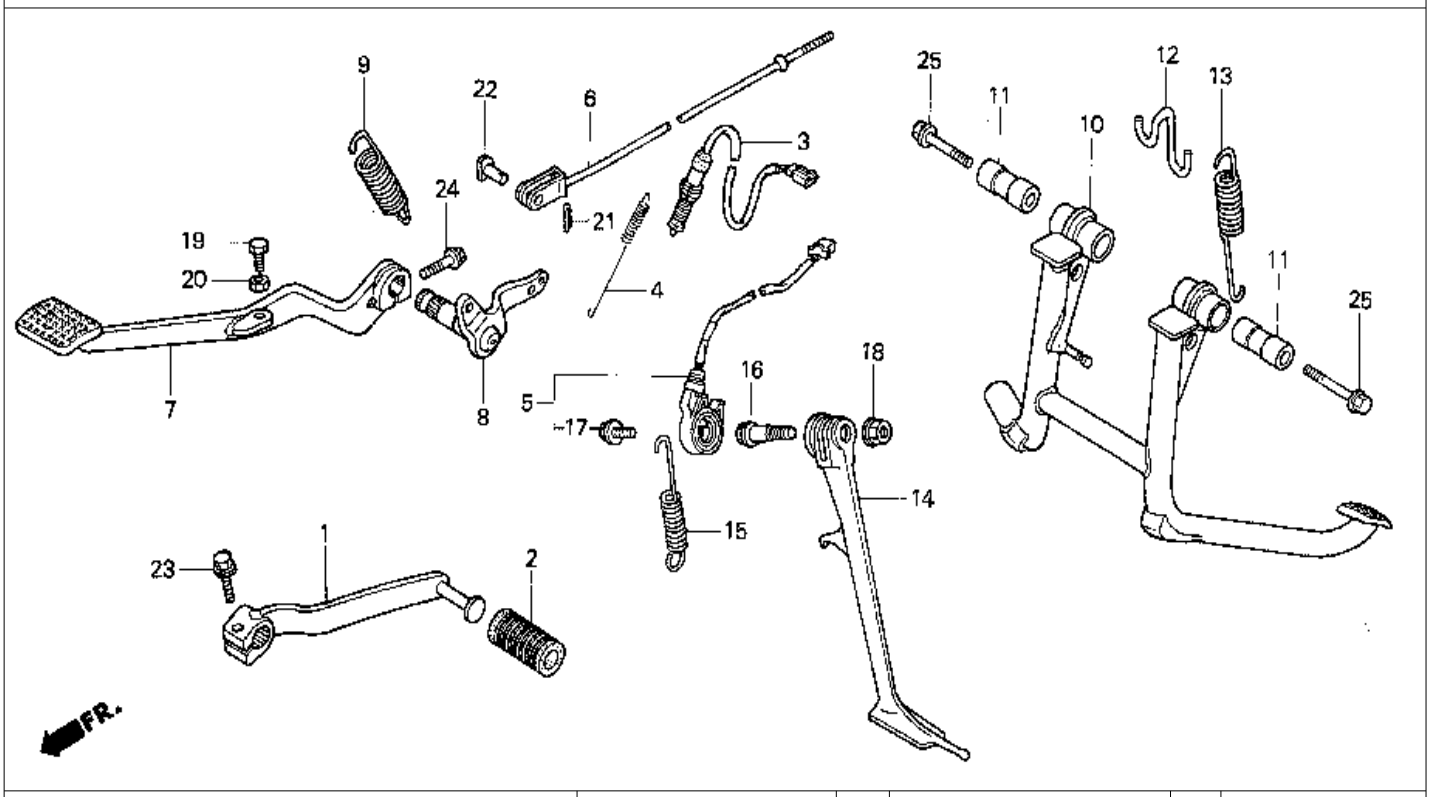

9 = PC800'89 6 = PC800'96
0 = PC800'90 7 = PC800'97
4 = PC800'94 8 = PC800'98
5 = PC800'95

Ref. No.	BLOCK NO. F-23 / DESCRIPTION	PC800 1989	1990	1994	1995	1996	1997	1998	AREA CODE	FRAME SERIAL NUMBER FROM		TO	QTY REQ	PART NUMBER
13	SPRING, MAIN STAND	9	0	4	5	6	7	8		.....		.....	1	50522-KE8-000
14	BAR, SIDE STAND	9	0	4	5	6	7	8		.....		.....	1	50530-MR5-000
15	SPRING, SIDE STAND	9	0	4	5	6	7	8		.....		.....	1	50535-MK6-670
16	BOLT, SIDE STAND PIVOT	9	0	4	5	6	7	8		.....		.....	1	90108-MR5-000
17	BOLT, SPECIAL (6X16)	9	0	4	5	6	7	8		.....		.....	1	90147-MK6-671
18	NUT, SIDE STAND	9	0	4	5	6	7	8		.....		.....	1	90203-MF9-710
19	BOLT, HEX (6X18)	9	0	..	..	..	..	..		.....		.....	1	92101-06018-0A
	BOLT, HEX (6X25)	..	..	4	5	6	7	8		.....		.....	1	92101-06025-0A
20	NUT, HEX. (6MM)	9	0	4	5	6	7	8		.....		.....	1	94002-06000-0S
21	PIN, COTTER (2.0X12)	9	0	4	5	6	7	8		.....		.....	1	94201-20120
22	PIN, JOINT (C)	9	0	4	5	6	7	8		.....		.....	1	95015-53000
23	BOLT, FLANGE (6X20)	9	0	4	5	6	7	8		.....		.....	1	95701-06020-00
24	BOLT, FLANGE (8X32)	9	0	4	5	6	7	8		.....		.....	1	95801-08032-08
25	BOLT, FLANGE (10X60)	9	0	..	..	..	..	..		.....		.....	2	95801-10060-10
	BOLT, FLANGE (10X60)	9	0	4	5	6	7	8		.....		.....	2	95801-10060-00

 © AMERICAN HONDA MOTOR CO. INC. 1997

STEP

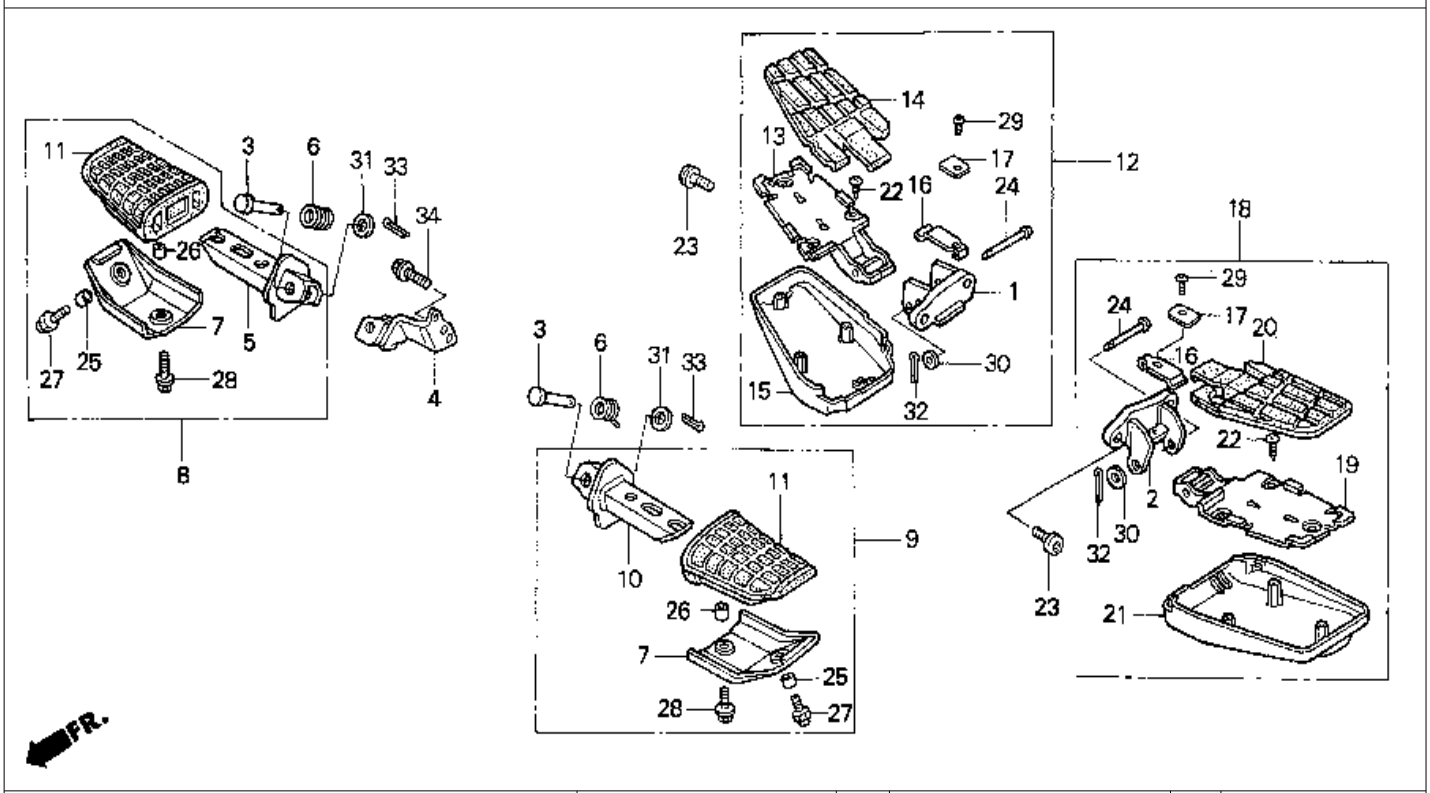

9 = PC800'89	6 = PC800'96												
0 = PC800'90	7 = PC800'97				PC800								
4 = PC800'94	8 = PC800'98												
5 = PC800'95													
			1	1	1	1	1	1	1				
			9	9	9	9	9	9	9				
			8	9	9	9	9	9	9				
Ref.	BLOCK NO.	F-24	9	0	4	5	6	7	8		FRAME		
No.	DESCRIPTION		9	0	4	5	6	7	8	AREA CODE	SERIAL FROM	NUMBER TO	QTY REQ	PART NUMBER
1	BRACKET, R. PILLION STEP		9	0	4	5	6	7	8		.....	.....	1	50151-MR5-000
2	BRACKET, L. PILLION STEP		9	0	4	5	6	7	8		.....	.....	1	50152-MR5-000
3	PIN, STEP BAR JOINT		9	..	..	..	..	..	..		.....	.....	2	50603-033-000
	PIN, STEP BAR JOINT		9	0	4	5	6	7	8		.....	.....	2	50603-033-010
4	BRACKET COMP., R. MAIN STEP		9	0	4	5	6	7	8		.....	.....	1	50610-MR5-000
5	BAR COMP., R. STEP		9	0	4	5	6	..	..		.....	.....	1	50612-MR5-000
	BAR COMP., R. STEP		..	..	..	..	..	7	8		.....	.....	1	50612-MR5-A30
6	SPRING, STEP RETURN		9	0	4	5	6	7	8		.....	.....	2	50617-MR5-000
7	COVER, STEP LOW		9	0	4	5	6	..	..		.....	.....	2	50619-MN5-000
	COVER, STEP (LOWER)		..	..	..	..	..	7	8		.....	.....	2	50619-MR5-A30
8	STEP ASSY., R. MAIN		9	0	..	..	..	..	..		.....	.....	1	50630-MR5-000
9	STEP ASSY., L. MAIN		9	0	..	..	..	..	..		.....	.....	1	50640-MR5-000
10	BAR COMP., L. STEP		9	0	4	5	6	..	..		.....	.....	1	50642-MR5-000
	BAR COMP., L. STEP		..	..	..	..	..	7	8		.....	.....	1	50642-MR5-A30
11	RUBBER, MAIN STEP		9	0	4	5	6	7	8		.....	.....	2	50661-MN5-000

 © AMERICAN HONDA MOTOR CO. INC. 1997

STEP

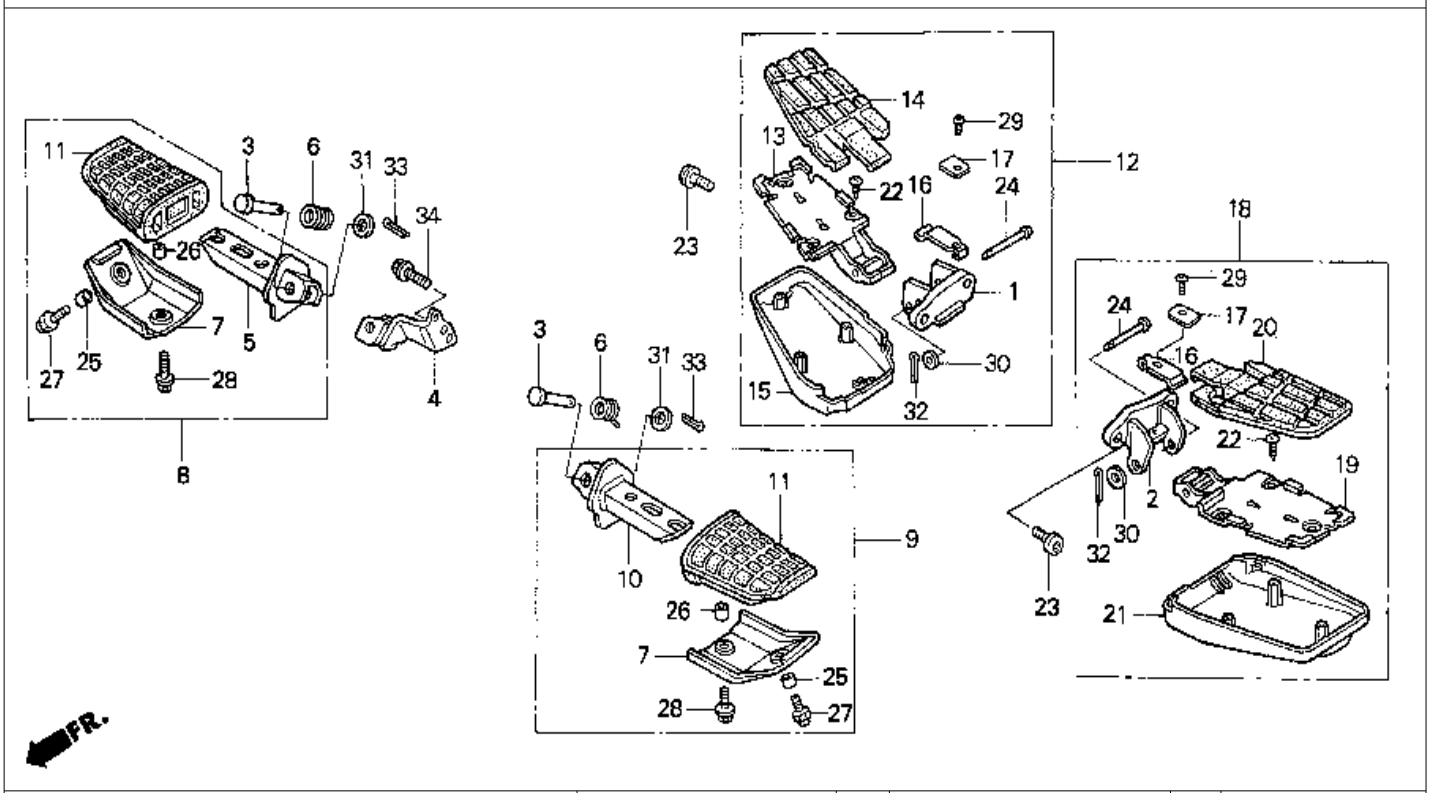

9 = PC800'89	6 = PC800'96							A					
0 = PC800'90	7 = PC800'97		PC800					R					
4 = PC800'94	8 = PC800'98							E				Q	
5 = PC800'95								A				T	
			1	1	1	1	1	1	1			Y	
			9	1	1	1	1	1	1				
			8	9	9	9	9	9	9	C			
			9	9	9	9	9	9	9	O	FRAME	R	
Ref.	BLOCK NO.	F-24								D	SERIAL NUMBER	E	
No.	DESCRIPTION		9	0	4	5	6	7	8	E	FROM TO	Q	PART NUMBER
12	STEP ASSY., R. PILLION *NH253M* (TYPE1)												
	(OCEAN GREY)		9	..	..	..	..	..	..		....	1	50710-MR5-00ZA
	STEP ASSY., R. PILLION *NH253M* (TYPE1)												
	(OCEAN GREY)		9	..	..	..	..	..	..		....	1	50710-MR5-00ZA
	STEP ASSY., R. PILLION *NH292M* (TYPE3)												
	(GRIFFEN GREY)		..	0	..	..	..	..	..		....	1	50710-MR5-00ZC
13	STEP, R. PILLION		9	0	4	5	6	7	8		....	1	50711-MR5-000
14	RUBBER, R. PILLION STEP		9	0	4	5	6	7	8		....	1	50714-MR5-000
15	COVER, R. PILLION STEP *NH253M* (TYPE1)												
	(OCEAN GREY)		9	..	..	..	..	..	..		....	1	50716-MR5-000ZA
	COVER, R. PILLION STEP *NH292M* (TYPE3)												
	(GRIFFEN GREY)		..	0	4	5	..	..	..		....	1	50716-MR5-000ZC
	COVER, R. PILLION STEP *NH292M*												
	(GRIFFEN GREY)		..	0	4	5	..	..	..		....	1	50716-MR5-000ZE
	COVER, R. PILLION STEP *NH197MU*												
	(KARAKORUM GREY)						6	..	..		....	1	50716-MR5-000ZF

 © AMERICAN HONDA MOTOR CO. INC. 1997

STEP

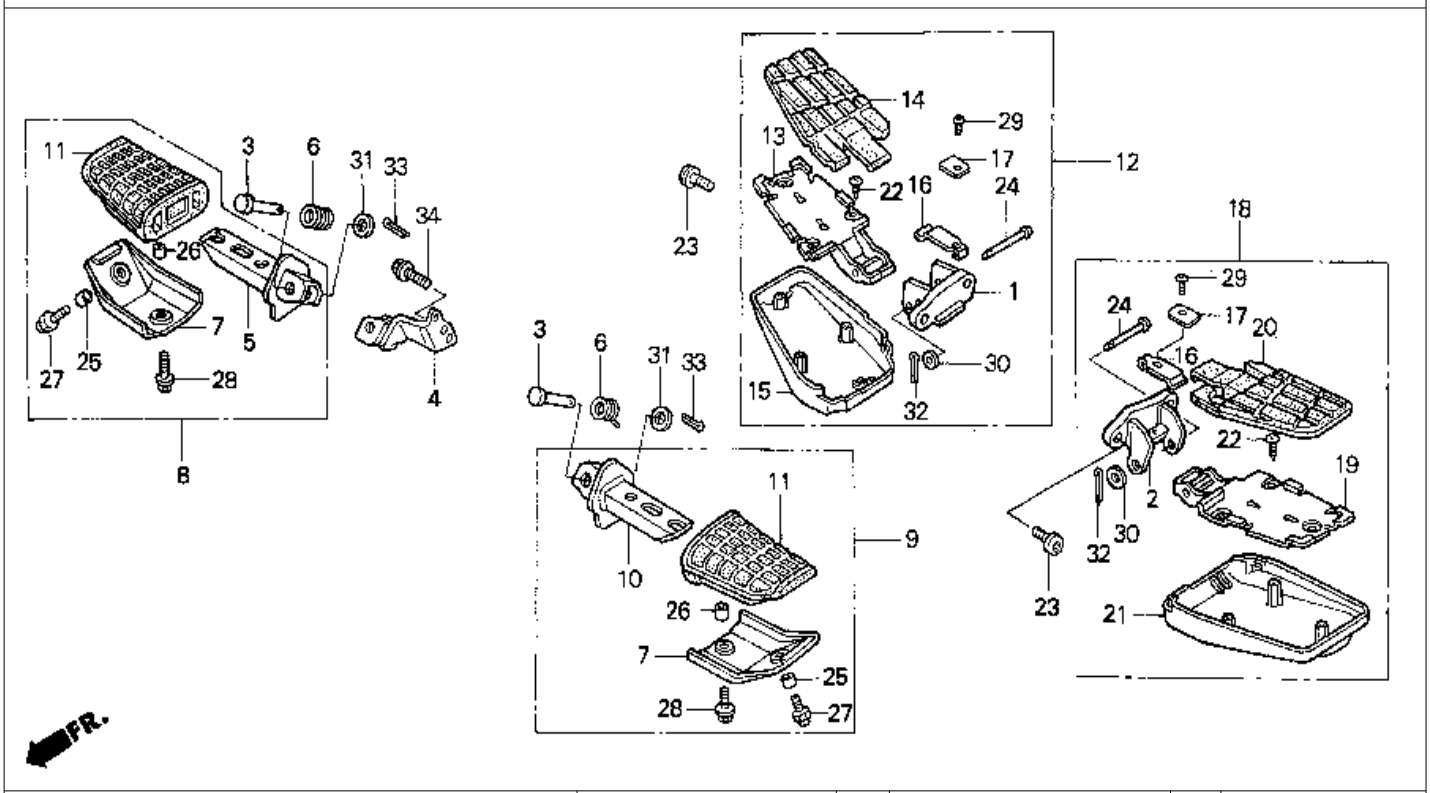

9 = PC800'89	6 = PC800'96								A				
0 = PC800'90	7 = PC800'97			PC800					R				
4 = PC800'94	8 = PC800'98								E			Q	
5 = PC800'95									A			T	
			1	1	1	1	1	1	1			Y	
			9	9	9	9	9	9	9	C			
			8	9	9	9	9	9	9	O	FRAME	R	
Ref.	BLOCK NO.	F-24	9	0	4	5	6	7	8	D	SERIAL NUMBER	E	
No.	DESCRIPTION		9	0	4	5	6	7	8	E	FROM TO	Q	PART NUMBER
15	COVER, R. PILLION STEP *NH340R*		..	..	..	..	..	7	8		....	1	50716-MR5-A30ZA
16	SPRING, PILLION STEP		9	..	..	..	..	..	..		....	2	50717-MR5-000
	SPRING, PILLION STEP		..	0	4	5	6	7	8		....	2	50717-MR5-870
17	SPRING, PILLION STEP (B)		9	0	4	5	6	7	8		....	1	50718-MR5-000
18	STEP ASSY., L. PILLION *NH253M* (TYPE1)												
	(OCEAN GREY)		9	..	..	..	..	..	..		....	1	50720-MR5-000ZA
	STEP ASSY., L. PILLION *NH253M* (TYPE1)												
	(OCEAN GREY)		9	..	..	..	..	..	..		....	1	50720-MR5-870ZA
	STEP ASSY., L. PILLION *NH292M* (TYPE3)												
	(GRIFFEN GREY)		..	0	..	..	..	..	..		....	1	50720-MR5-870ZC
19	STEP, L. PILLION		9	0	4	5	6	7	8		....	1	50721-MR5-000
20	RUBBER, L. PILLION STEP		9	0	4	5	6	7	8		....	1	50724-MR5-000
21	COVER, L. PILLION STEP *NH253M* (TYPE1)												
	(OCEAN GREY)		9	..	..	..	..	..	..		....	1	50726-MR5-000ZA
	COVER, L. PILLION STEP *NH292M* (TYPE3)												
	(GRIFFEN GREY)		..	0	..	..	..	..	..		....	1	50726-MR5-000ZC

 © AMERICAN HONDA MOTOR CO. INC. 1997

STEP

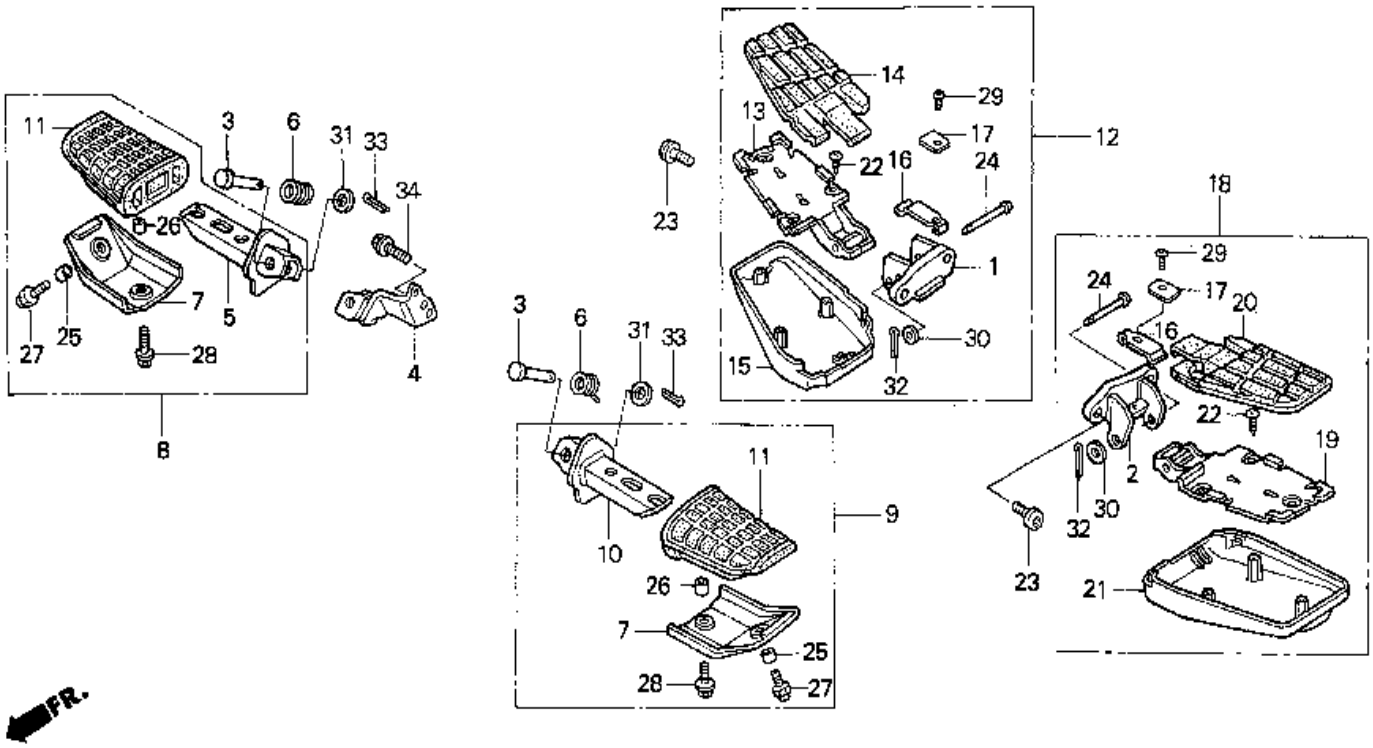

9 = PC800'89	6 = PC800'96							A					
0 = PC800'90	7 = PC800'97		PC800					R					
4 = PC800'94	8 = PC800'98							E				Q	
5 = PC800'95								A				T	
			1	1	1	1	1	1	1			Y	
			9	9	9	9	9	9	9	C			
			8	9	9	9	9	9	9	O	FRAME	R	
Ref.	BLOCK NO.	F-24	9	0	4	5	6	7	8	D	SERIAL NUMBER	E	
No.	DESCRIPTION		9	0	4	5	6	7	8	E	FROM TO	Q	PART NUMBER
21	COVER, L. PILLION STEP *NH292M* (TYPE3)												
	(GRIFFEN GREY)		..	0	4	5	..	..	..		....	1	50726-MR5-000ZE
	COVER, L. PILLION STEP *NH197MU*												
	(KARAKORUM GREY)		..	..	..	..	6	..	..		....	1	50726-MR5-000ZF
	COVER, L. PILLION STEP *NH340R*		..	..	..	..	..	7	8		....	1	50726-MR5-A30ZA
22	SCREW, TAPPING (4X12)		9	0	4	5	6	7	8		....	6	90101-SA4-000
	SCREW, TAPPING (4X16)		9	0	4	5	6	7	8		....	6	93913-14280
23	BOLT, SOCKET (8X22)		9	0	4	5	6	7	8		....	4	90107-MR5-000
24	PIN, PILLION STEP		9	0	4	5	6	7	8		....	2	90131-GE1-670
25	COLLAR, (6MM)		9	0	4	5	6	7	8		....	2	90311-GF0-810
26	COLLAR, RR. MUDGAURD		9	0	4	5	6	7	8		....	2	90325-197-000
27	BOLT, CAP. (6X12)		9	0	4	5	6	..	..		....	2	92501-06012-0B
	BOLT, CAP. (6X12)		..	..	..	..	..	7	8		....	2	92501-06012-0G
28	BOLT-WASHER (8X25)		9	0	4	5	6	..	..		....	2	93403-06020-00
	BOLT-WASHER (8X20)		..	..	..	..	..	7	8		....	2	93403-06020-07
29	SCREW, PAN (4X6)		9	0	4	5	6	7	8		....	2	93500-04006-0G

 © AMERICAN HONDA MOTOR CO. INC. 1997

STEP

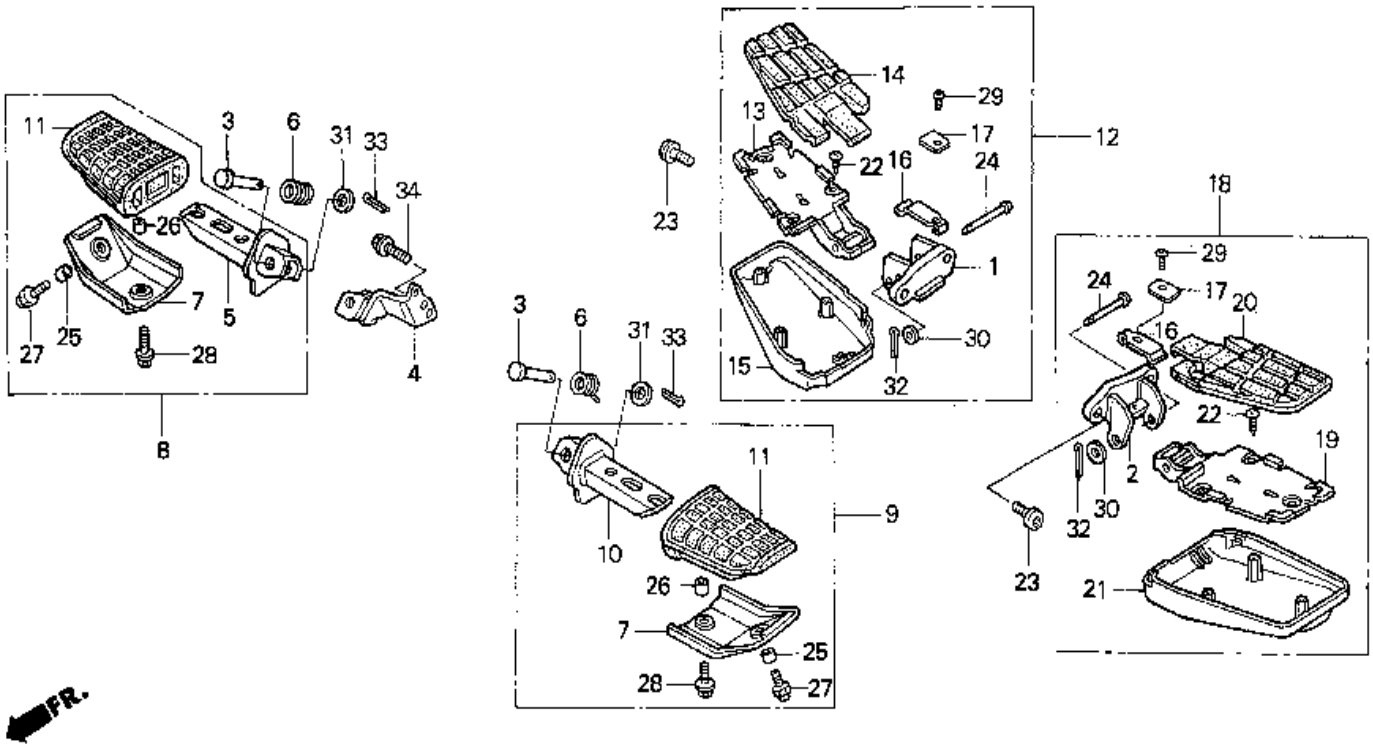

9 = PC800'89	6 = PC800'96							A				
0 = PC800'90	7 = PC800'97		PC800					R				
4 = PC800'94	8 = PC800'98							E			Q	
5 = PC800'95								A			T	
			1	1	1	1	1				Y	
			9	9	9	9	9					
			8	9	9	9	9	C			R	
								O	FRAME			
Ref.	BLOCK NO.	F-24	9	0	4	5	6	7	8	D	SERIAL	NUMBER	E	
No.	DESCRIPTION		9	0	4	5	6	7	8	E	FROM	TO	Q	PART NUMBER
30	WASHER, PLAIN (6MM)		9	0	4	5	6	7	8		.....	.....	2	94101-06800
31	WASHER, PLAIN (8MM)		9	0	4	5	6	7	8		.....	.....	2	94101-08000
32	PIN, COTTER (1.6X12)		9	0	4	5	6	7	8		.....	.....	2	94201-16120
33	PIN, COTTER (1.6X15)		9	0	4	5	6	7	8		.....	.....	2	94201-16150
	PIN, COTTER (1.6X25)		9	0	4	5	6	7	8		.....	.....	2	94201-16250
34	BOLT, FLANGE (10X25)		9	0	4	5	6	7	8		.....	.....	1	95701-10025-08

 © AMERICAN HONDA MOTOR CO. INC. 1997

SWING ARM

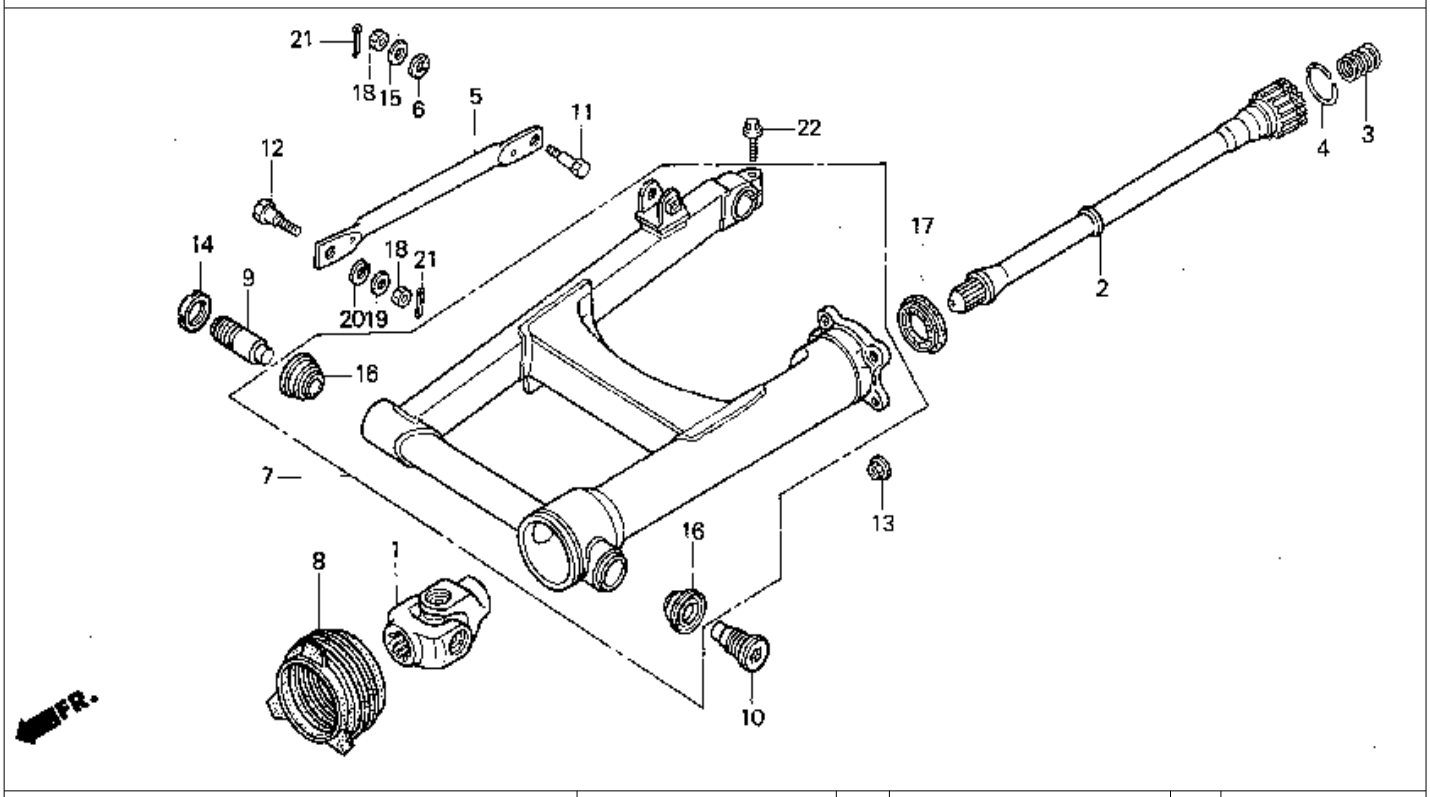

9 = PC800'89 6 = PC800'96
0 = PC800'90 7 = PC800'97
4 = PC800'94 8 = PC800'98
5 = PC800'95

Ref. No.	BLOCK NO. F-25 / DESCRIPTION	PC800 1989	1990	1994	1995	1996	1997	1998	AREA CODE	FRAME SERIAL NUMBER FROM		TO	QTY REQ	PART NUMBER
1	JOINT COMP., YOKE	9	0	4	5	6	7	8		.....		.....	1	40200-MR5-003
2	SHAFT, PROPELLER	9	0	4	5	6	7	8		.....		.....	1	40201-MK7-003
3	SPRING, PROPELLER SHAFT	9	0	4	5	6	7	8		.....		.....	1	40215-ME9-003
4	RING, STOPPER	9	0	4	5	6	7	8		.....		.....	1	40221-MB0-000
5	ARM, RR. BRAKE STOPPER	9	0	4	5	6	7	8		.....		.....	1	43431-MK4-000
6	RUBBER, STOPPER ARM CUSHION	9	0	4	5	6	7	8		.....		.....	1	43434-286-000
7	SINGARM ASSY., RR.	9	0	4	5	6	7	8		.....		.....	1	52100-MR5-000
8	BOOT, JOINT	9	0	4	5	6	7	8		.....		.....	1	52104-MR5-000
9	BOLT, R. SWINGARM PIVOT	9	0	4	5	6	7	8		.....		.....	1	90121-MK7-770
10	BOLT, L. SWINGARM PIVOT	9	0	4	5	6	7	8		.....		.....	1	90124-MK7-770
11	BOLT, RR. BRAKE STOPPER	9	0	4	5	6	7	8		.....		.....	1	90127-393-000
12	BOLT, RR. BRAKE STOPPER ARM	9	0	4	5	6	7	8		.....		.....	1	90133-286-000
13	NUT, HEX. (10MM)	9	0	4	5	6	7	8		.....		.....	4	90308-357-000
14	NUT, LOCK (23MM)	9	0	4	5	6	7	8		.....		.....	1	90354-MK7-770
15	WASHER (8MM)	9	0	4	5	6	..	..		.....		.....	1	90505-425-000
	WASHER A, HANDLE HOLDER SETTING	9	0	4	5	6	7	8		.....		.....	1	90524-030-000

 © AMERICAN HONDA MOTOR CO. INC. 1997

SWING ARM

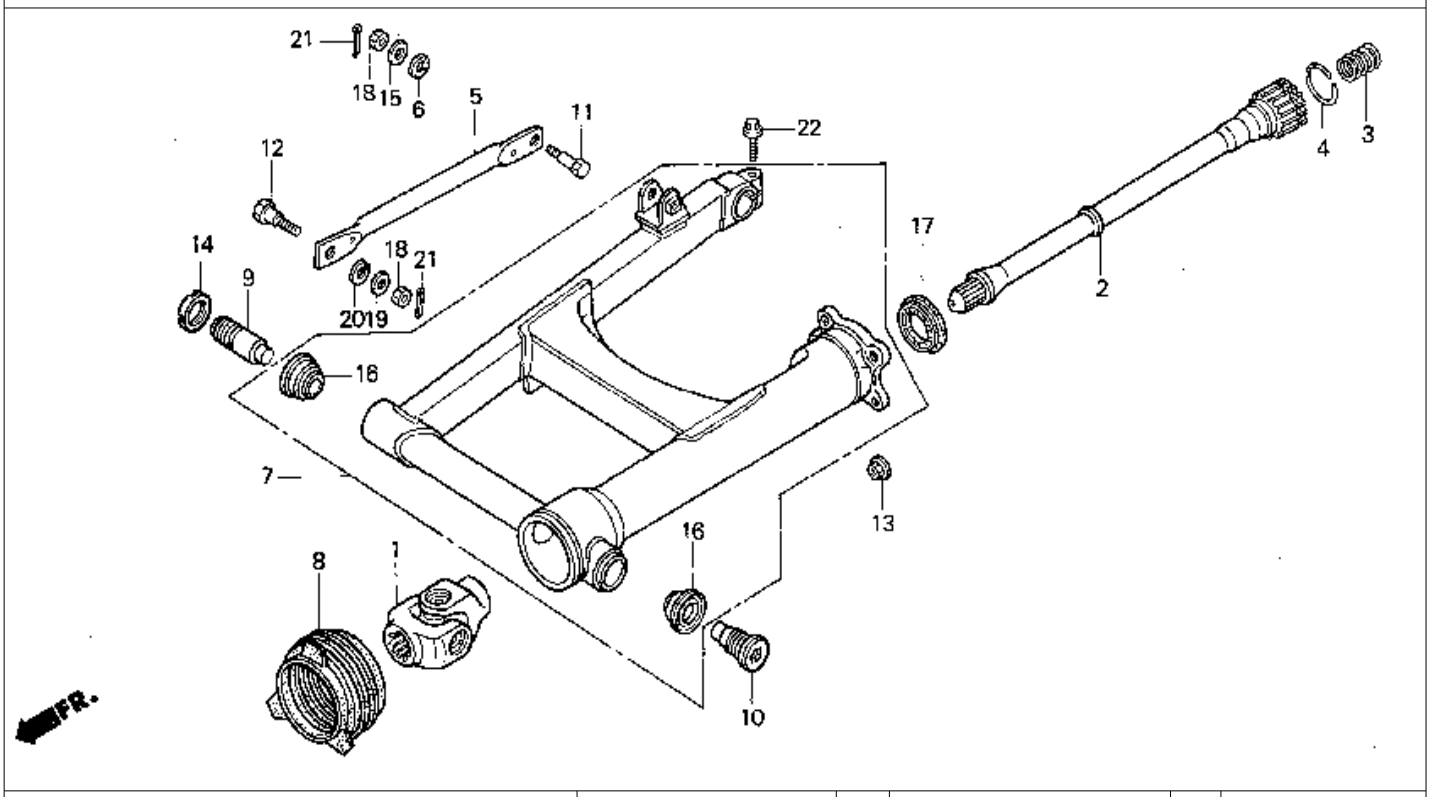

9 = PC800'89 6 = PC800'96
0 = PC800'90 7 = PC800'97
4 = PC800'94 8 = PC800'98
5 = PC800'95

Ref. No.	BLOCK NO. F-25 / DESCRIPTION	PC800 1989	1990	1994	1995	1996	1997	1998	AREA CODE	FRAME SERIAL NUMBER FROM		TO	QTY REQ	PART NUMBER
16	BEARING, TAPER ROLLER (30202)	9	0	4	5	6	7	8		.....		.....	2	90166-MR6-671
17	OIL SEAL (27X43X7)	9	0	4	5	6	7	8		.....		.....	1	91261-ME9-005
18	NUT, HEX. (8MM)	9	0	4	5	6	7	8		.....		.....	2	94001-08000-05
19	WASHER, PLAIN (8MM)	9	0	4	5	6	7	8		.....		.....	1	94101-08000
20	WASHER, SPRING (8MM)	9	0	4	5	6	7	8		.....		.....	1	94111-10000
21	PIN, COTTER (2.0X18)	9	0	4	5	6	7	8		.....		.....	2	94201-20180
	PIN, COTTER (2.0X20)	9	0	4	5	6	7	8		.....		.....	2	94201-20200
	PIN, COTTER (2.0X22)	9	0	4	5	6	7	8		.....		.....	2	94201-20220
	PIN, COTTER (2.0X25)	9	0	4	5	6	7	8		.....		.....	2	94201-20250
	PIN, COTTER (2.0X32)	9	0	4	5	6	7	8		.....		.....	2	94201-20320
	PIN, COTTER (2.0X35)	9	0	4	5	6	7	8		.....		.....	2	94201-20350
	PIN, COTTER (2.0X22)	9	0	4	5	6	7	8		.....		.....	2	94201-29220
22	BOLT, FLANGE (8X32)	9	..	..	..	..	..	..		.....		.....	1	95700-08032-00
	BOLT, FLANGE (8X32)	9	0	4	5	6	7	8		.....		.....	1	95701-08032-00

 © AMERICAN HONDA MOTOR CO. INC. 1997

REAR SHOCK ABSORBER

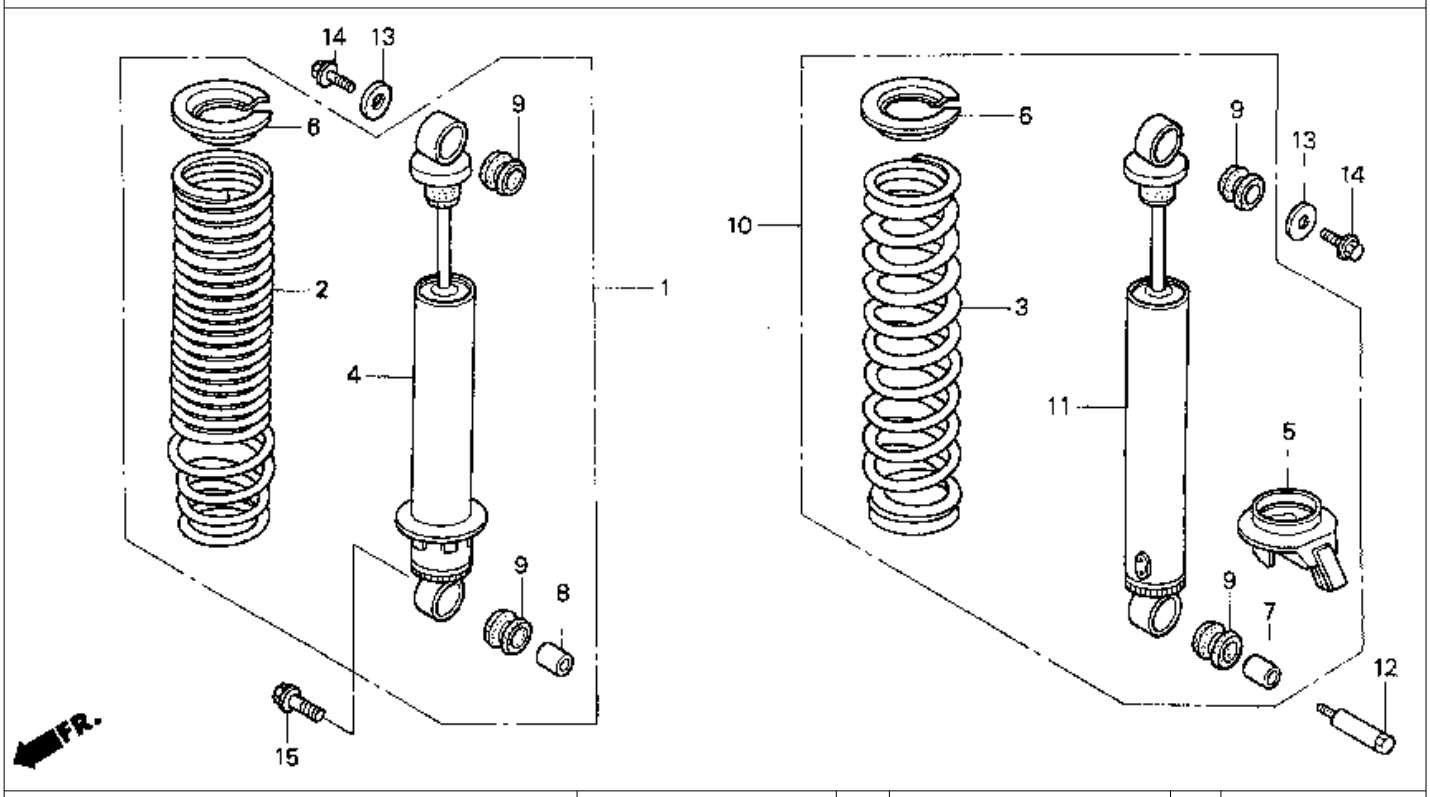

9 = PC800'89 6 = PC800'96
0 = PC800'90 7 = PC800'97
4 = PC800'94 8 = PC800'98
5 = PC800'95

Ref. No.	BLOCK NO. F-26 / DESCRIPTION	1989	1990	1994	1995	1996	1997	1998	AREA CODE	FRAME SERIAL FROM		FRAME NUMBER TO	QTY REQ	PART NUMBER
1	SHOCK ABSORBER ASSY., R. RR.	9	0	4	5	6	7	8		.....		.....	1	52400-MR5-003
2	SPRING, RR. SHOCK ABSORBER (SHOWA)	9	0	..	..	..	..	..		.....		.....	1	52401-MR5-003
3	SPRING B, RR. SHOCK ABSORBER (SHOWA)	9	0	..	..	..	..	..		.....		.....	1	52402-MR5-003
4	DAMPER COMP., R. RR. (SHOWA)	9	0	..	..	..	..	..		.....		.....	1	52410-MR5-003
5	ADJUSTER, SPRING	9	0	..	..	..	..	..		.....		.....	1	52422-MR5-003
6	STOPPER, SPRING SEAT (SHOWA)	9	0	..	..	..	..	..		.....		.....	2	52459-MR5-003
7	COLLAR, RR. SHOCK ABSORBER	9	0	4	5	6	7	8		.....		.....	1	52486-MG9-671
8	COLLAR, RR. SHOCK ABSORBER	9	0	4	5	6	7	8		.....		.....	1	52486-463-000
9	BUSH, RUBBER (UPPER) (SHOWA)	9	0	4	5	6	7	8		.....		.....	4	52489-461-771
10	SHOCK ABSORBER ASSY., L. RR.	9	0	4	5	6	7	8		.....		.....	1	52500-MR5-003
11	DAMPER COMP., L. RR. (SHOWA)	9	0	..	..	..	..	..		.....		.....	1	52510-MR5-003
12	BOLT, RR. SHOCK ABSORBER	9	0	4	5	6	7	8		.....		.....	1	90159-MG9-000
13	WASHER (8.5X26)	9	0	4	5	6	7	8		.....		.....	2	90504-MA6-000
14	BOLT, FLANGE (8X16)	9	0	4	5	6	7	8		.....		.....	2	95701-08016-08
15	BOLT, FLANGE (10X35)	9	..	..	..	..	..	..		.....		.....	1	95800-10035-02
	BOLT, FLANGE (10X35)	..	0	4	5	6	..	..		.....		.....	1	95801-10035-02
	BOLT, FLANGE (10X35)	..	..	..	..	..	7	8		.....		.....	1	95801-10035-08

 © AMERICAN HONDA MOTOR CO. INC. 1997

REAR FENDER

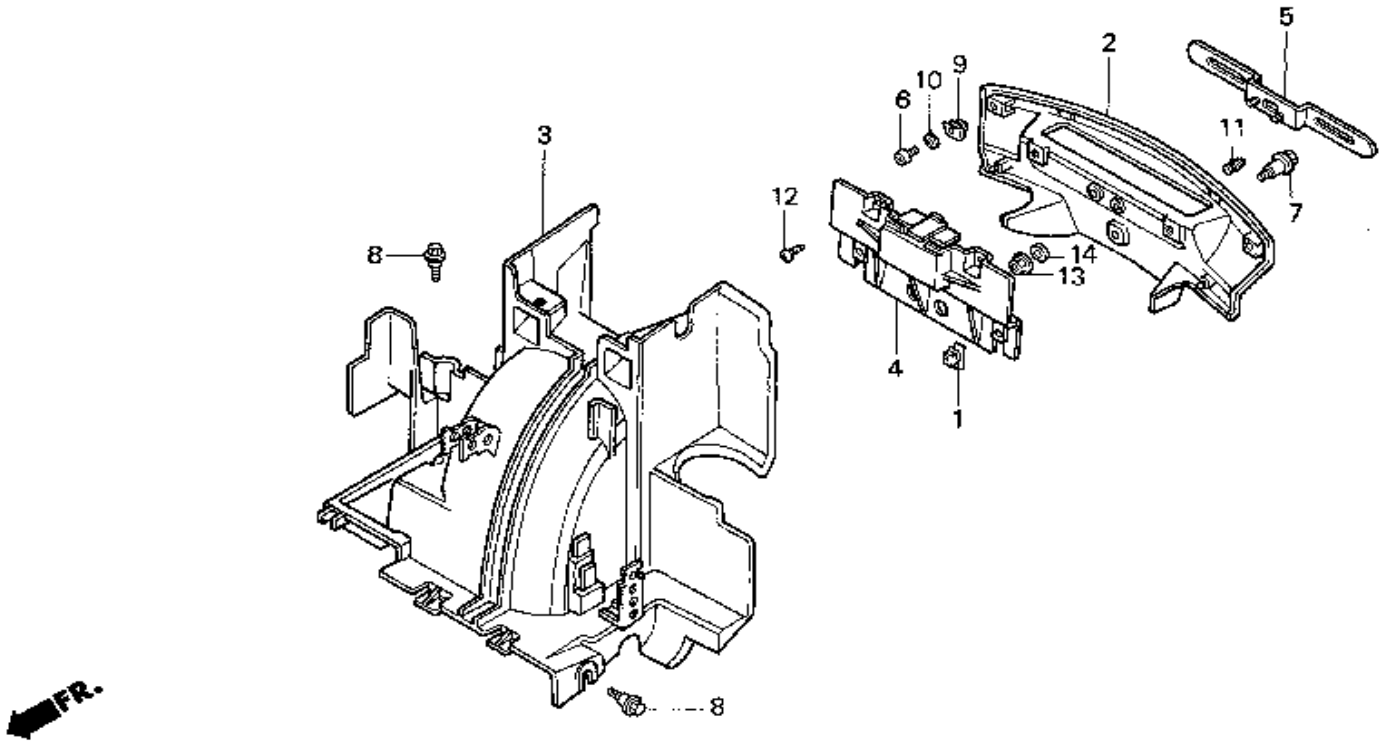

9 = PC800'89 6 = PC800'96
0 = PC800'90 7 = PC800'97
4 = PC800'94 8 = PC800'98
5 = PC800'95

Ref. No.	BLOCK NO. F-27 / DESCRIPTION	1989	1990	1994	1995	1996	1997	1998	AREA CODE	FRAME SERIAL NUMBER FROM		TO	QTY REQ	PART NUMBER
1	NUT, CLIP (6MM)	9	0	4	5	6	7	8		.....		.....	2	64529-MC7-000
2	FENDER A, RR. *NH253M* (TYPE1)													
	(OCEAN GREY)	9	..	..	..	..	..	..		.....		.....	1	80100-MR5-00ZA
	FENDER A, RR. *NH292M* (TYPE3)													
	(GRIFFEN GREY)	..	0	4	5	..	..	..		.....		.....	1	80100-MR5-00ZC
	FENDER A, RR. *NH292M*													
	(GRIFFEN GREY)	..	0	4	5	..	..	..		.....		.....	1	80100-MR5-00ZE
	FENDER A, RR. *NH197MU*													
	(KARAKORUM GREY)	..	..	..	..	6	..	..		.....		.....	1	80100-MR5-00ZF
	FENDER A, RR. *NH340R*	..	..	..	..	..	7	8		.....		.....	1	80100-MR5-A30ZA
3	FENDER B, RR.	9	0	4	5	6	7	8		.....		.....	1	80105-MR5-000
4	MUDGUARD A, RR.	9	0	4	5	6	7	8		.....		.....	1	80125-MR5-000
5	BRACKET, NUMBER PLATE	9	0	4	5	6	7	8		.....		.....	1	84701-MR5-000
6	SCREW, PAN (5X17)	9	0	4	5	6	7	8		.....		.....	2	90105-MG9-000
7	BOLT, FR. FENDER SETTING	9	0	4	5	6	7	8		.....		.....	2	90106-MM9-000
8	BOLT, FLANGE (6MM) (BLACK)	9	0	4	5	6	7	8		.....		.....	2	90113-GE4-000
9	NUT, CLIP (5MM)	9	0	4	5	6	7	8		.....		.....	2	90677-GR1-003

 © AMERICAN HONDA MOTOR CO. INC. 1997

REAR FENDER

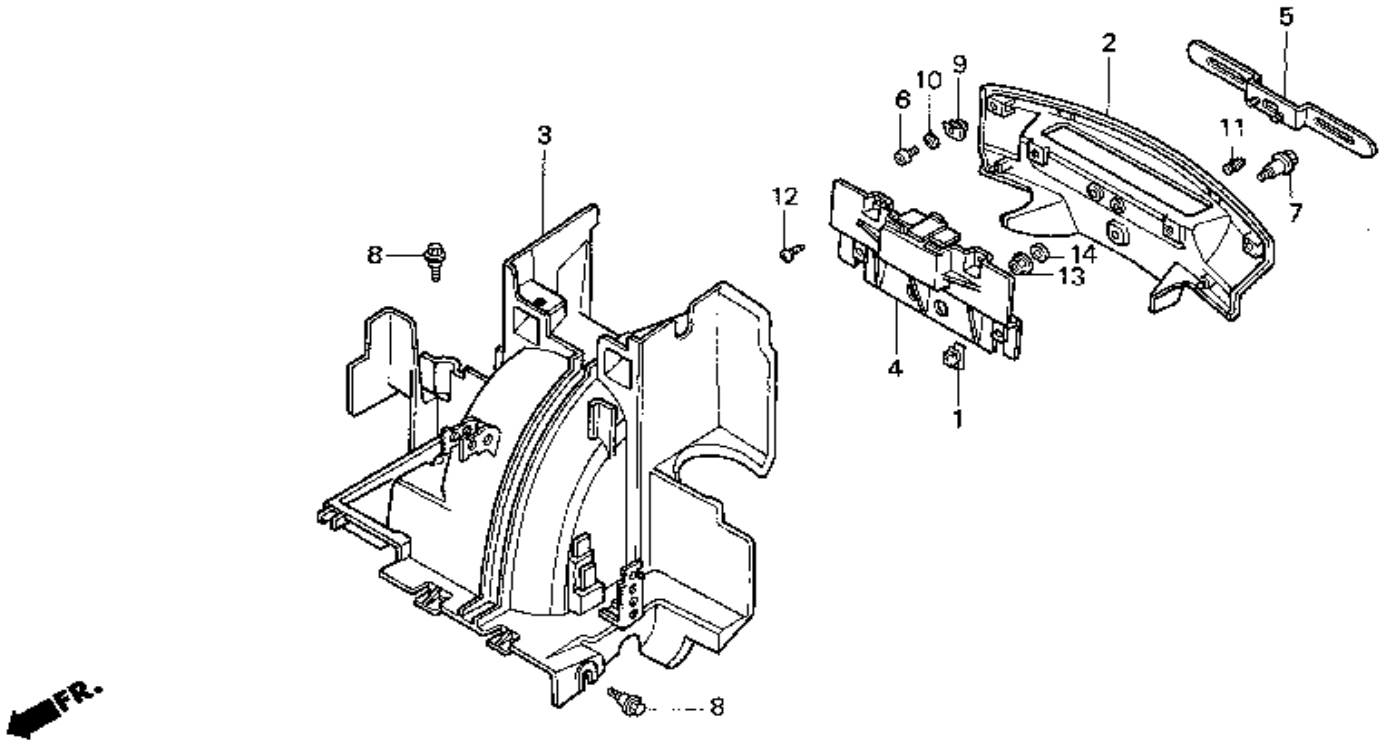

9 = PC800'89
0 = PC800'90
4 = PC800'94
5 = PC800'95
6 = PC800'96
7 = PC800'97
8 = PC800'98

BLOCK NO. F-27

Ref. No.	DESCRIPTION	1989 9	1990 0	1994 4	1995 5	1996 6	1997 7	1998 8	AREA CODE	FRAME SERIAL NUMBER FROM		TO	QTY REQ	PART NUMBER
10	WASHER PLAIN (7MM)	9	0	4	5	6	7	8		.....		.....	2	90755-693-620
11	PLUG, CONE TYPE	9	0	4	5	6	7	8		.....		.....	1	90899-422-610
12	SCREW, TAPPING (6X20)	9	0	4	5	6	7	8		.....		.....	2	93903-26320
13	NUT, FLANGE (6MM)	9	0	4	5	6	7	8		.....		.....	2	94050-06080
14	WASHER, PLAIN (6MM)	9	0	4	..	..	..	..		.....		.....	2	94101-06800

 © AMERICAN HONDA MOTOR CO. INC. 1997

TURN SIGNAL

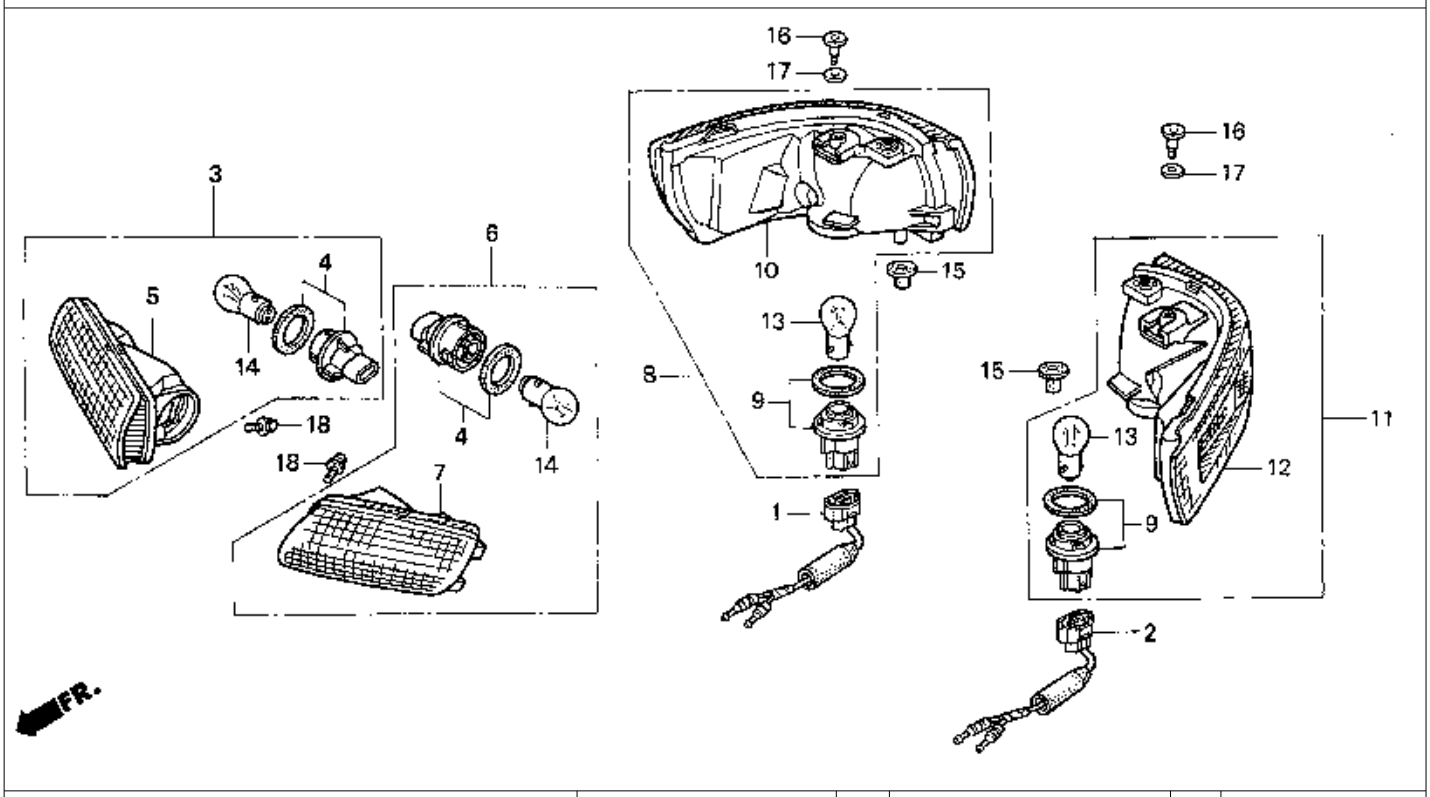

9 = PC800'89 6 = PC800'96
0 = PC800'90 7 = PC800'97
4 = PC800'94 8 = PC800'98
5 = PC800'95

Ref. No.	BLOCK NO. F-28 / DESCRIPTION	1989	1990	1994	1995	1996	1997	1998	AREA CODE	FRAME SERIAL FROM		FRAME NUMBER TO	QTY REQ	PART NUMBER
1	SUB-WIRE, R. RR. TURN SIGNAL	9	0	4	5	6	7	8		.....		.....	1	32107-MR5-000
2	SUB-WIRE, L. RR. TURN SIGNAL	9	0	4	5	6	7	8		.....		.....	1	32108-MR5-000
3	TURN SIGNAL ASSY., R. FR. (12V23/8W)	9	..	..	..	..	..	..		.....		.....	1	33400-MR5-671
		..	0	..	..	..	..	..	A	.....		.....	1	33400-MR5-671
		..	0	..	..	..	..	..	AC	.....		.....	1	33400-MR5-671
	TURN SIGNAL ASSY., R. FR. (12V23/8W)	..	0	..	..	..	..	..	A	.....		LM102546	1	33400-MR5-870
		..	0	..	..	..	..	..	AC	.....		.....	1	33400-MR5-870
4	SOCKET, BULB (3P)	9	0	4	5	6	7	8		.....		.....	2	33405-MR5-671
5	TURN SIGNAL SUB-ASSY., R. FR.	9	..	4	5	6	7	8		.....		.....	1	33410-MR5-671
		..	0	..	..	..	..	..	A	LM102547		.....	1	33410-MR5-671
	TURN SIGNAL SUB-ASSY., R. FR.	..	0	..	..	..	..	..	A	.....		LM102546	1	33410-MR5-870
		..	0	..	..	..	..	..	AC	.....		.....	1	33410-MR5-870
6	TURN SIGNAL ASSY., L. FR. (12V23/8W)	9	..	..	..	..	..	..		.....		.....	1	33450-MR5-671
	TURN SIGNAL ASSY., L. FR. (12V23/8W)	..	0	..	..	..	..	..		.....		.....	1	33450-MR5-870
7	TURN SIGNAL SUB-ASSY., L. FR.	9	..	..	..	..	..	..		.....		.....	1	33460-MR5-671
	TURN SIGNAL SUB-ASSY., L. FR.	..	0	4	5	6	7	8		.....		.....	1	33460-MR5-870

 © AMERICAN HONDA MOTOR CO. INC. 1997

TURN SIGNAL

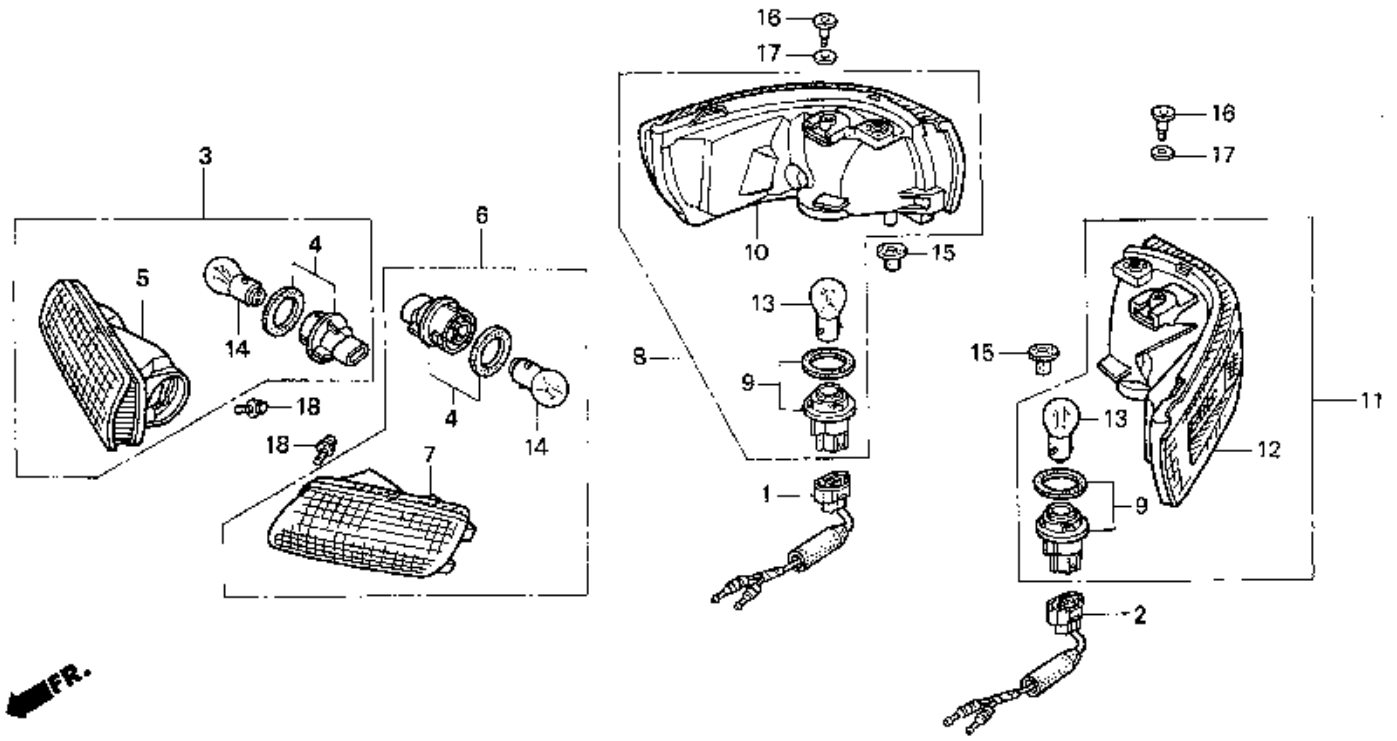

9 = PC800'89 6 = PC800'96
0 = PC800'90 7 = PC800'97
4 = PC800'94 8 = PC800'98
5 = PC800'95

Ref. No.	BLOCK NO. F-28 / DESCRIPTION	PC800 1989	1990	1994	1995	1996	1997	1998	AREA CODE	FRAME SERIAL NUMBER FROM	TO	QTY REQ	PART NUMBER
8	TURN SIGNAL ASSY., R. RR.	9	..	..	..	..	..	..		.....	.....	1	33600-MR5-671
	TURN SIGNAL ASSY., R. RR.	9	0	..	..	..	..	..		.....	.....	1	33600-MR5-672
9	SOCKET, BULB (2P)	9	0	4	5	6	7	8		.....	.....	2	33605-MR5-671
10	LIGHT SUB ASSY., R. RR. TURN SIGNAL	9	..	..	..	..	..	..		.....	.....	1	33610-MR5-671
	LIGHT SUB ASSY., R. RR. TURN SIGNAL	9	0	4	5	6	7	8		.....	.....	1	33610-MR5-672
11	TURN SIGNAL ASSY., L. RR.	9	..	..	..	..	..	..		.....	.....	1	33650-MR5-671
	TURN SIGNAL ASSY., L. RR.	9	0	..	..	..	..	..		.....	.....	1	33650-MR5-672
12	LIGHT SUB ASSY., L. RR. TURN SIGNAL	9	..	..	..	..	..	..		.....	.....	1	33660-MR5-671
	LIGHT SUB ASSY., L. RR. TURN SIGNAL	9	0	4	5	6	7	8		.....	.....	1	33660-MR5-672
13	BULB, TURN SIGNAL (12V 23W)	9	0	4	5	6	7	8		.....	.....	2	34905-268-671
14	BULB, STOP & TAILLIGHT (12V23/8W)	9	0	4	5	6	7	8		.....	.....	2	34906-313-671
15	BOOT, HEADLIGHT BRACKET	9	0	4	5	6	7	8		.....	.....	2	61312-149-300
16	SCREW, PAN (6X14)	9	0	4	5	6	7	8		.....	.....	2	90113-MR5-000
17	WASHER (8.5MM)	9	0	4	5	6	7	8		.....	.....	2	90510-MR5-000
18	SCREW-WASHER (5X12)	9	0	4	5	6	7	8		.....	.....	2	93893-05012-08

 © AMERICAN HONDA MOTOR CO. INC. 1997

TAILLIGHT

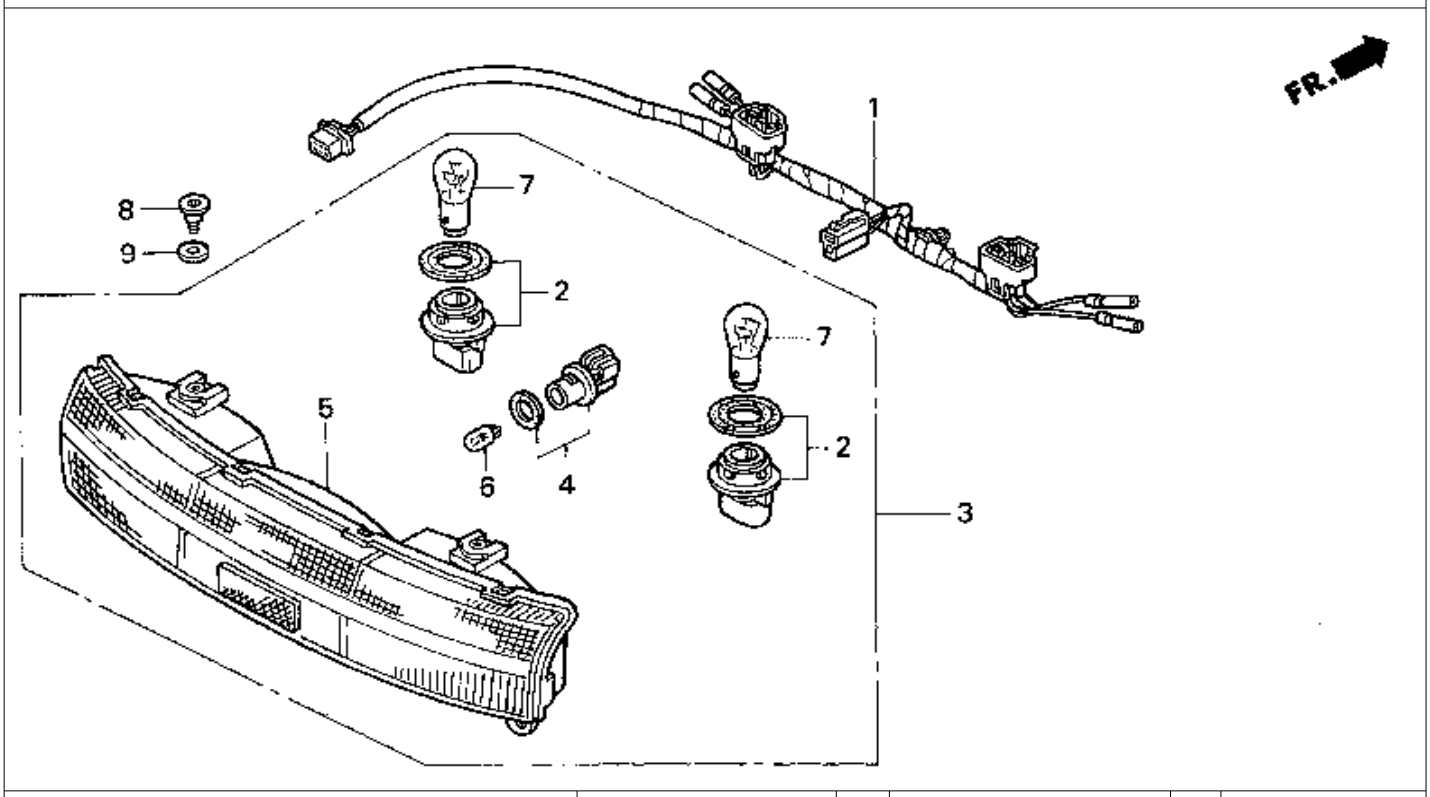

9 = PC800'89 6 = PC800'96
0 = PC800'90 7 = PC800'97
4 = PC800'94 8 = PC800'98
5 = PC800'95

Ref. No.	BLOCK NO. F-29 / DESCRIPTION	PC800 1989	1990	1994	1995	1996	1997	1998	AREA CODE	FRAME SERIAL NUMBER FROM		TO	QTY REQ	PART NUMBER
1	SUB-HARNESS, TAIL	9	..	..	..	..	..	..		.....		.....	1	32103-MR5-670
	SUB-HARNESS, TAIL	9	0	4	5	6	7	8		.....		.....	1	32103-MR5-870
2	SOCKET, BULB (3P)	9	0	4	5	6	7	8		.....		.....	2	33405-MR5-671
3	TAILLIGHT UNIT (12V 3CP)	9	..	..	..	..	..	..		.....		.....	1	33701-MR5-671
	TAILLIGHT UNIT (12V 3CP)	9	0	..	..	..	..	..		.....		.....	1	33701-MR5-672
4	SOCKET, BULB (2P)	9	0	4	5	6	7	8		.....		.....	1	33705-MR5-671
5	LENS COMP., TAILLIGHT	9	..	..	..	..	..	..		.....		.....	1	33710-MR5-671
	LENS COMP., TAILLIGHT	9	0	4	5	6	7	8		.....		.....	1	33710-MR5-672
6	BULB (12V5W)	9	0	4	5	6	7	8		.....		.....	1	34901-SB0-671
7	BULB, TAILLIGHT (12V27/7W 2057HD)	9	0	4	5	6	7	8		.....		.....	2	34906-MG9-771
8	SCREW, PAN (8.5MM)	9	0	4	5	6	7	8		.....		.....	2	90113-MR5-000
9	WASHER, SEALING (8.5MM)	9	0	4	5	6	7	8		.....		.....	2	90501-MR5-000

 © AMERICAN HONDA MOTOR CO. INC. 1997

BATTERY

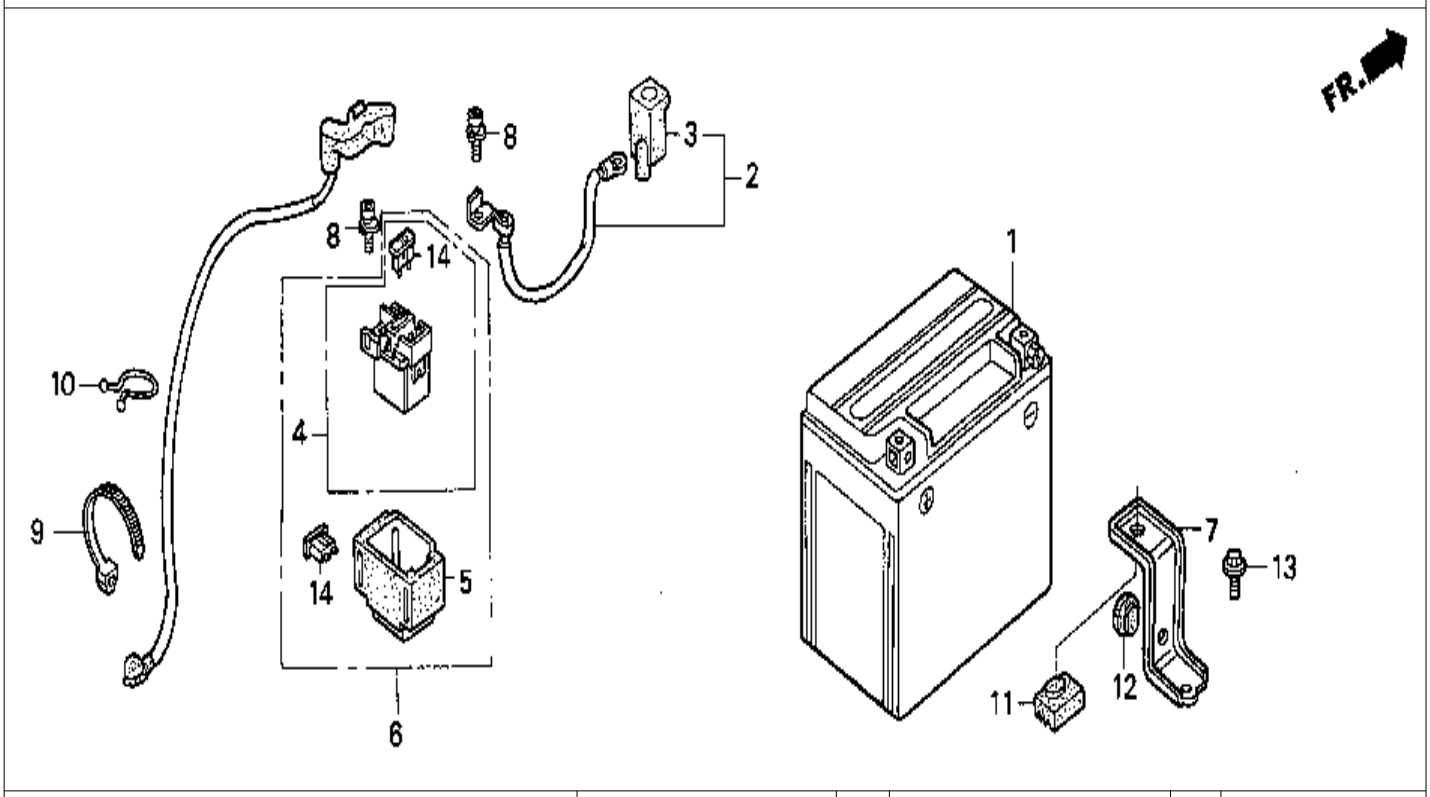

9 = PC800'89 6 = PC800'96
0 = PC800'90 7 = PC800'97
4 = PC800'94 8 = PC800'98
5 = PC800'95

Ref. No.	BLOCK NO. F-30 / DESCRIPTION	1989 9	1990 0	1994 4	1995 5	1996 6	1997 7	1998 8	AREA CODE	FRAME SERIAL FROM		FRAME NUMBER TO	QTY REQ	PART NUMBER
1	BATTERY (YTX12-BS) (YUASA)	9	0	..	..	..	..	..		.....		.....	1	31500-HA0-685
	BATTERY (YTX12-BS) (YUASA)	9	0	..	..	..	..	..		.....		.....	1	31500-HA0-686
		..	..	4	..	..	..	..	A	.....		RM200802	1	31500-HA0-686
		..	..	4	..	..	..	..	AC	.....		RM200165	1	31500-HA0-686
	BATTERY (YTX12-BS) (YUASA)	9	0		5	6	7	8		.....		.....	1	31500-HA0-677
		..	..	4	..	..	..	..	A	.....		.....	1	31500-HA0-677
		..	..	4	..	..	..	..	AC	.....		.....	1	31500-HA0-677
	BATTERY (YTX12-BS) (YUASA)	..	..	4	..	..	..	..	A	.....		RM200802	1	31500-HA0-687
		..	..	4	..	..	..	..	AC	.....		RM200165	1	31500-HA0-687
	BATTERY (YTX12-BS) (YUASA)	..	..	4	..	..	..	..	A	RM200803		.....	1	31500-HA0-688
		..	..	4	..	..	..	..	AC	RM200166		.....	1	31500-HA0-688
		..	..	..	5	6	7	8		.....		.....	1	31500-HA0-688
2	CABLE,STARTER BATTERY	9	0	4	5	6	7	8		.....		.....	1	32401-MR5-000
3	COVER A, BATTERY TERMINAL	9	0	4	5	6	7	8		.....		.....	1	32403-MR5-000
4	SWITCH ASSY., STARTER MAGNETIC	9	0	4	5	6	7	8		.....		.....	1	35850-MR5-007
5	RUBBER, SHOCK	9	0	4	5	6	7	8		.....		.....	1	35856-MR5-000
6	MAGNETIC SET, STARTER	9	0	4	5	6	7	8		.....		.....	1	35860-MR5-000
7	BAND, BATTERY	9	0	4	5	6	7	8		.....		.....	1	50325-MR5-000

 © AMERICAN HONDA MOTOR CO. INC. 1997

BATTERY

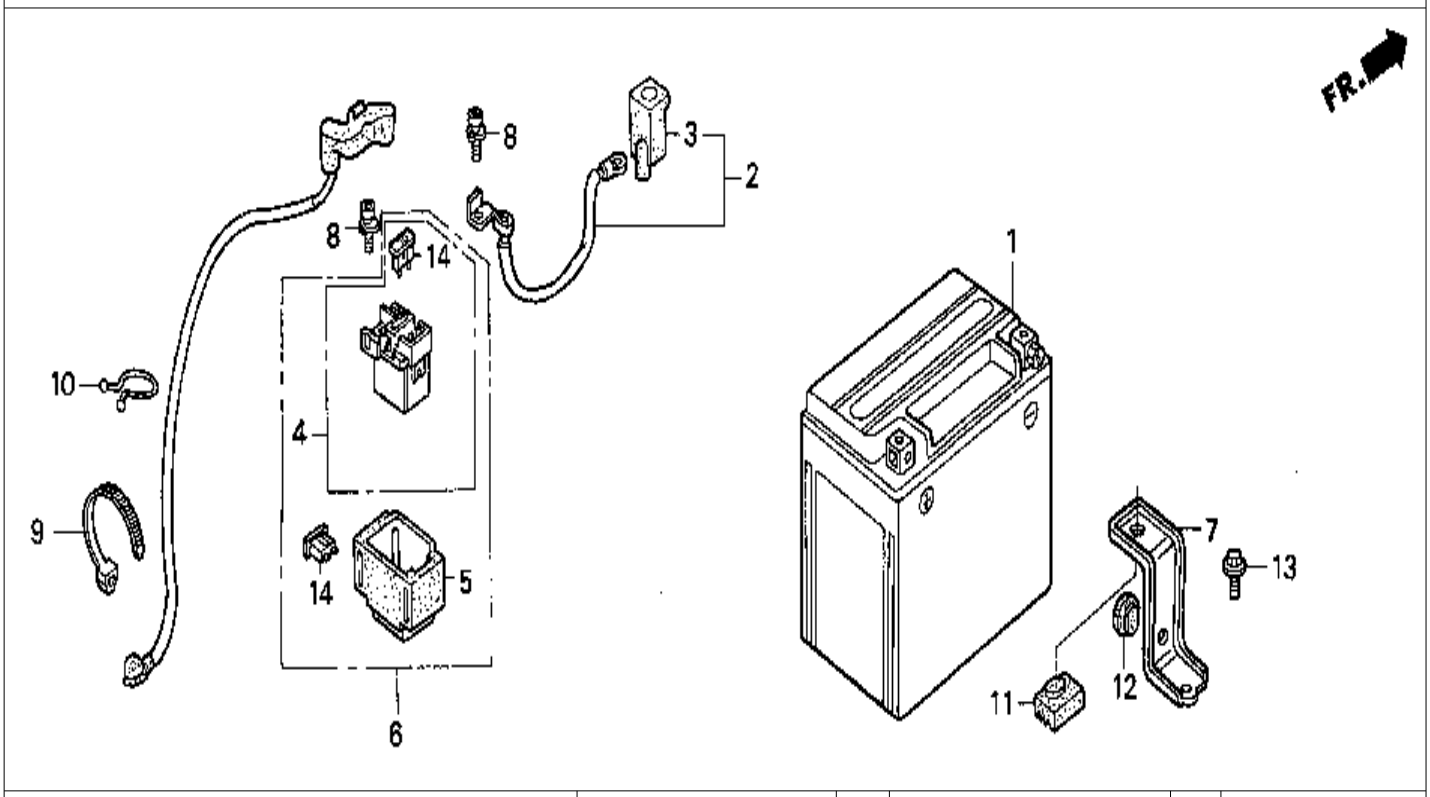

9 = PC800'89
0 = PC800'90
4 = PC800'94
5 = PC800'95
6 = PC800'96
7 = PC800'97
8 = PC800'98

Ref. No.	BLOCK NO. F-30 / DESCRIPTION	1989	1990	1994	1995	1996	1997	1998	AREA CODE	FRAME SERIAL NUMBER FROM	TO	QTY REQ	PART NUMBER
8	BOLT, SOCKET (5X9)	9	0	4	5	6	7	8		.....	.....	2	90111-MR5-000
9	BAND, WIRE HARNESS	9	0	4	5	6	7	8		.....	.....	1	90602-SB2-003
10	CLIP, HARNESS	9	0	4	5	6	7	8		.....	.....	1	90659-MR5-000
11	RUBBER A, STOPPER STAND	9	0	4	5	6	7	8		.....	.....	1	95011-61000
12	RUBBER C, STOPPER STAND	9	0	4	5	6	7	8		.....	.....	1	95011-63000
13	BOLT, FLANGE (6X10)	9	0	4	5	6	7	8		.....	.....	1	95701-06010-08
14	FUSE, BLADE (30A)	9	0	4	5	6	7	8		.....	.....	2	98200-33000

 © AMERICAN HONDA MOTOR CO. INC. 1997

IGNITION COIL

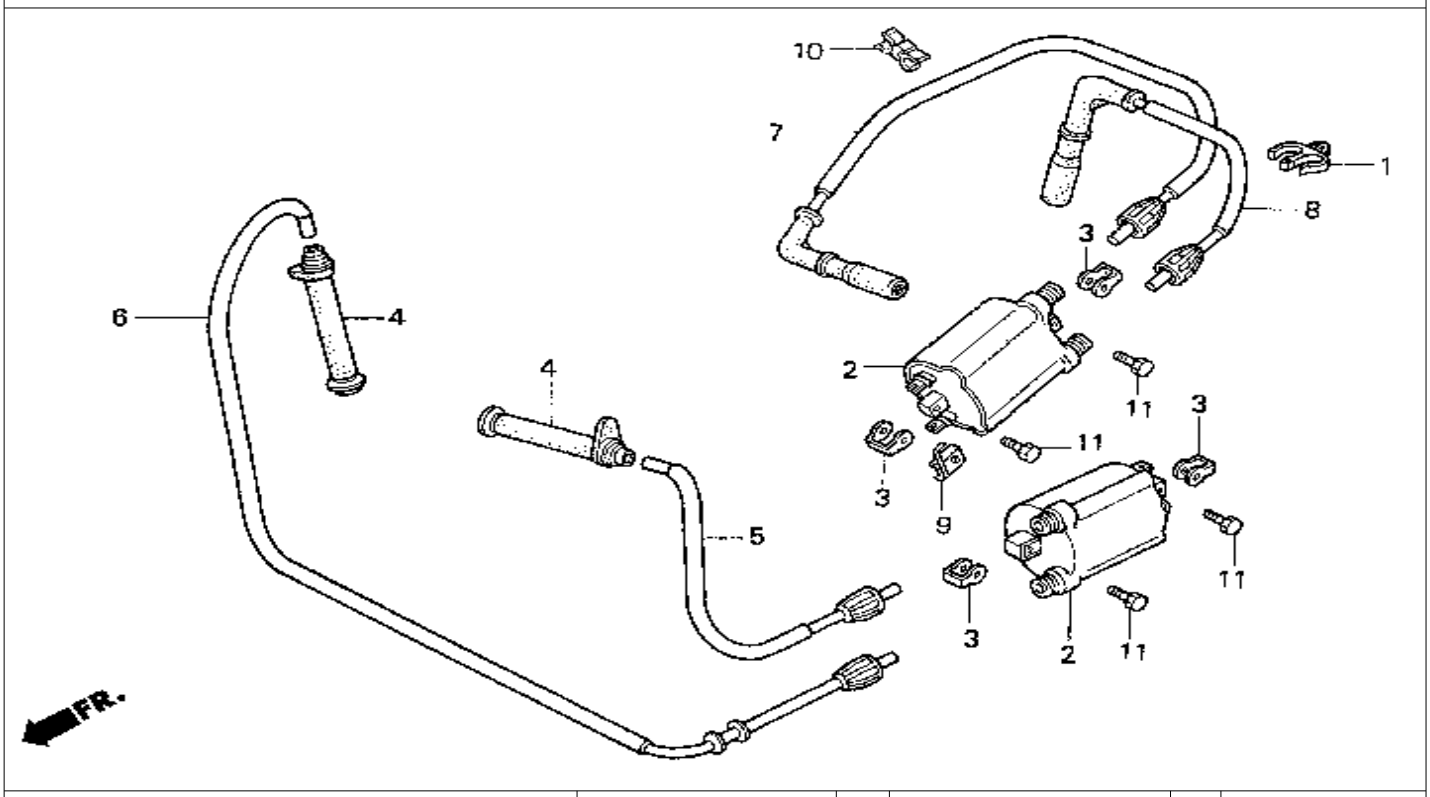

9 = PC800'89 6 = PC800'96
0 = PC800'90 7 = PC800'97
4 = PC800'94 8 = PC800'98
5 = PC800'95

Ref. No.	BLOCK NO. F-31 / DESCRIPTION	1998	1999	1999	1999	1999	1999	1998	AREA CODE	FRAME SERIAL FROM		FRAME NUMBER TO	QTY REQ	PART NUMBER
		PC800												
1	CLAMP, AUTO CHOKE HARNESS	9	0	4	5	6	7	8		.....		.....	1	17406-PD2-661
2	COIL COMP., IGNITION	9	0	4	5	6	7	8		.....		.....	2	30510-MM8-003
3	SPACER, IGNITION COIL	9	0	4	5	6	7	8		.....		.....	4	30520-ML7-000
4	CAP ASSY., NOISE SUPPRESSOR	9	0	..	..	..	..	..		.....		.....	2	30700-MK4-610
	CAP ASSY., NOISE SUPPRESSOR	9	0	4	5	6	..	..		.....		.....	2	30700-MK4-611
	CAP ASSY., NOISE SUPPRESSOR	..	..	..	..	..	7	8		.....		.....	2	30700-KN8-731
5	WIRE 1, IGNITION	9	0	4	5	6	7	8		.....		.....	1	30751-MR5-000
6	WIRE 2, IGNITION	9	0	4	5	6	7	8		.....		.....	1	30752-MR5-000
7	CAP ASSY. 3, IGNITION	9	0	4	5	6	..	..		.....		.....	1	30753-MR5-000
	CAP ASSY. 3, IGNITION	..	..	..	..	..	7	..		.....		.....	1	30753-MR5-A30
	CAP ASSY. 3, IGNITION	..	..	..	..	..	7	8		.....		.....	1	30753-MR5-A31
8	CAP ASSY. 4, IGNITION	9	0	4	5	6	..	..		.....		.....	1	30754-MR5-000
	CAP ASSY. 4, IGNITION	..	..	..	..	..	7	..		.....		.....	1	30754-MR5-A30
	CAP ASSY. 4, IGNITION	..	..	..	..	..	7	8		.....		.....	1	30754-MR5-A31
9	GAURD, IGNITION COIL STAY	9	0	4	5	6	7	8		.....		.....	1	50328-MR5-000
10	CLIP, CABLE	9	0	4	5	6	7	8		.....		.....	1	90655-MB1-920
11	BOLT, HEX. (6X20)	9	0	..	..	..	..	..		.....		.....	4	92201-06020-4J
	BOLT, HEX. (6X20)	..	..	4	5	6	7	8		.....		.....	4	92101-06020-4J

 © AMERICAN HONDA MOTOR CO. INC. 1997

WIRE HARNESS

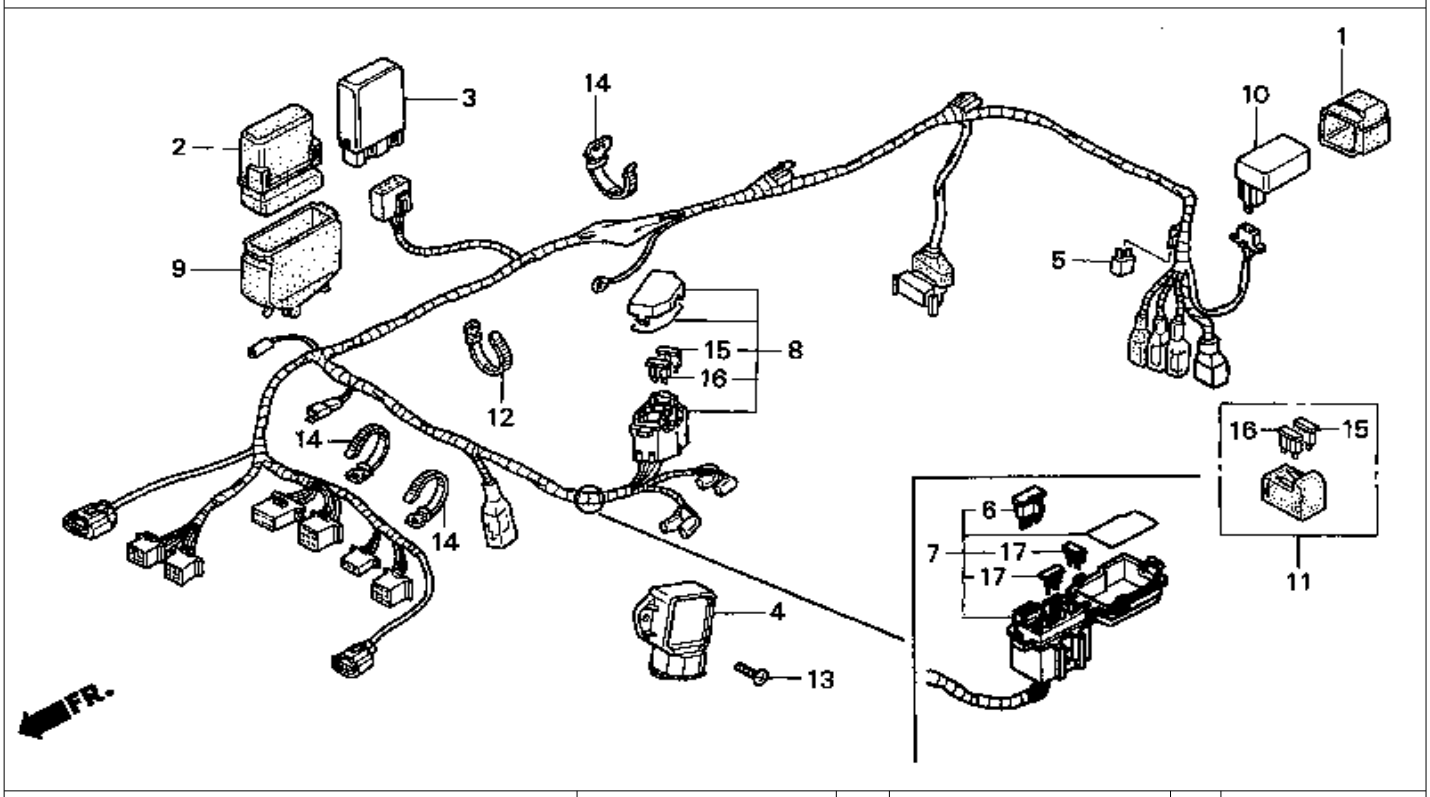

9 = PC800'89 6 = PC800'96
0 = PC800'90 7 = PC800'97
4 = PC800'94 8 = PC800'98
5 = PC800'95

Ref. No.	BLOCK NO. F-32 / DESCRIPTION	1989 / 9	1990 / 0	1994 / 4	1995 / 5	1996 / 6	1997 / 7	1998 / 8	AREA CODE	FRAME SERIAL FROM		FRAME NUMBER TO	QTY REQ	PART NUMBER
1	RUBBER, MODULE IGNITION CONTROL (CDI)	9	0	4	5	6	7	8		.....		.....	1	30401-GE8-000
2	SUSPENSION, SPARK UNIT	9	0	4	5	6	7	8		.....		.....	1	30405-MN4-000
3	SPARK UNIT	9	..	..	..	..	..	..	A	.....		KM003348	1	30410-MR5-006
		9	..	..	..	..	..	..	AC	.....		KM000730	1	30410-MR5-006
	SPARK UNIT	9	..	..	..	..	..	..	A	KM003349		.....	1	30410-MR5-621
		9	..	..	..	..	..	..	AC	KM000731		.....	1	30410-MR5-621
		..	0	4	5	6	7	8		.....		.....	1	30410-MR5-621
4	RECTIFIER ASSY., REGULATE (SHINDENGEN)	9	0	..	..	..	..	..		.....		.....	1	31600-KY2-703
	RECTIFIER ASSY., REGULATE	9	0	4	5	6	7	8		.....		.....	1	31600-MV4-000
5	RECTIFIER ASSY., SILICON (STANLEY)	9	..	..	..	..	..	..		.....		.....	1	31700-124-003
	RECTIFIER ASSY., REGULATE (SHINDENGEN)	9	..	..	..	..	..	..		.....		.....	1	31700-124-008
	RECTIFIER COMP.	..	0	4	5	6	..	..		.....		.....	1	31700-196-000
6	DIODE ASSY., THREE-WAY	..	..	..	..	..	7	8		.....		.....	1	31730-MAS-601
7	WIRE HARNESS	..	..	..	..	..	7	8		.....		.....	1	32100-MR5-A30
8	WIRE HARNESS	9	..	..	..	..	..	..		.....		.....	1	32100-MR5-000
	WIRE HARNESS	..	0	4	5	6	..	..		.....		.....	1	32100-MR5-870

 © AMERICAN HONDA MOTOR CO. INC. 1997

WIRE HARNESS

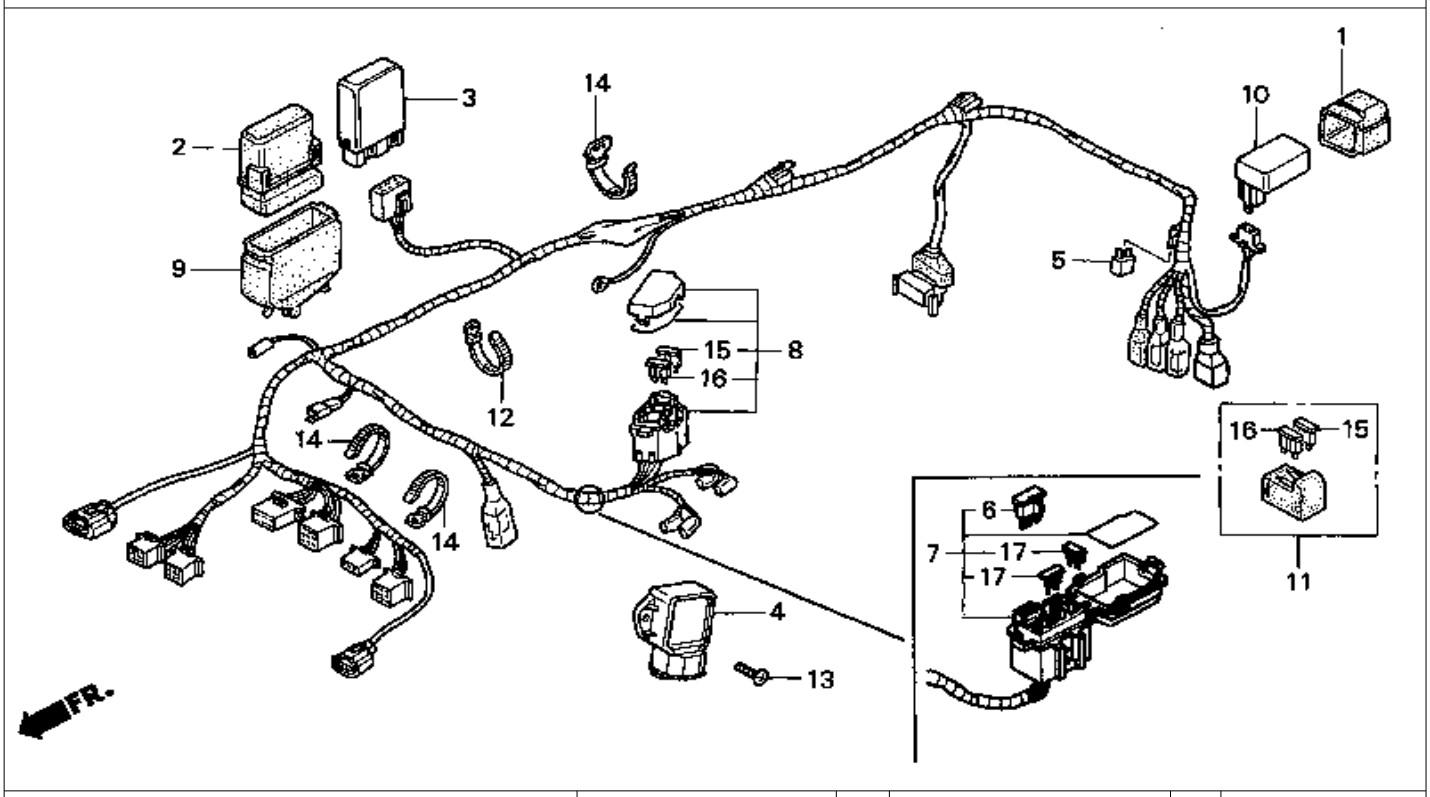

9 = PC800'89 6 = PC800'96
0 = PC800'90 7 = PC800'97
4 = PC800'94 8 = PC800'98
5 = PC800'95

Ref. No.	BLOCK NO. F-32 / DESCRIPTION	1989	1990	1994	1995	1996	1997	1998	AREA CODE	FRAME SERIAL FROM		FRAME NUMBER TO	QTY REQ	PART NUMBER
9	COVER, SPARK UNIT	9	0	4	5	6	7	8		.....		.....	1	32111-MR5-670
10	RELAY, FUEL CUT (SHINDENGEN)	9	0	4	5	6	7	8		.....		.....	1	36100-MN4-008
11	FUSE COMP., SPARE	9	0	4	5	6	..	..		.....		.....	1	38210-MR5-000
12	BAND, WIRE HARNESS	9	0	4	5	6	7	8		.....		.....	1	90620-SB2-003
13	SCREW, PAN (6X16)	9	0	4	5	..	..	..		.....		.....	2	93500-06016
	SCREW, PAN (6X16)	9	0	4	5	..	..	..		.....		.....	2	93500-06016-0A
	BOLT, FLANGE (6X16)	..	..	..	..	6	7	8		.....		.....	2	93500-06016-00
14	BAND, WIRE HARNESS	9	..	..	..	..	..	..	A	KM000537		.....	1	90650-MA6-720
		9	..	..	..	..	..	..	AC	KM000076		.....	1	90650-MA6-720
		..	0	4	5	6	7	8		.....		.....	3	90650-MA6-720
	BAND B2, CABLE HARNESS	9	..	..	..	..	..	..	A	.....		KM000536	1	95014-62200
		9	..	..	..	..	..	..	AC	.....		KM000075	1	95014-62200
15	FUSE, BLADE (10A)	9	0	4	5	6	..	..		.....		.....	4	98200-31000
16	FUSE, BLADE (15A)	9	0	4	5	6	..	..		.....		.....	2	98200-31500
17	FUSE F (10A) (MINI)	..	..	..	..	..	7	8		.....		.....	6	98200-41000

 © AMERICAN HONDA MOTOR CO. INC. 1997

RADIATOR

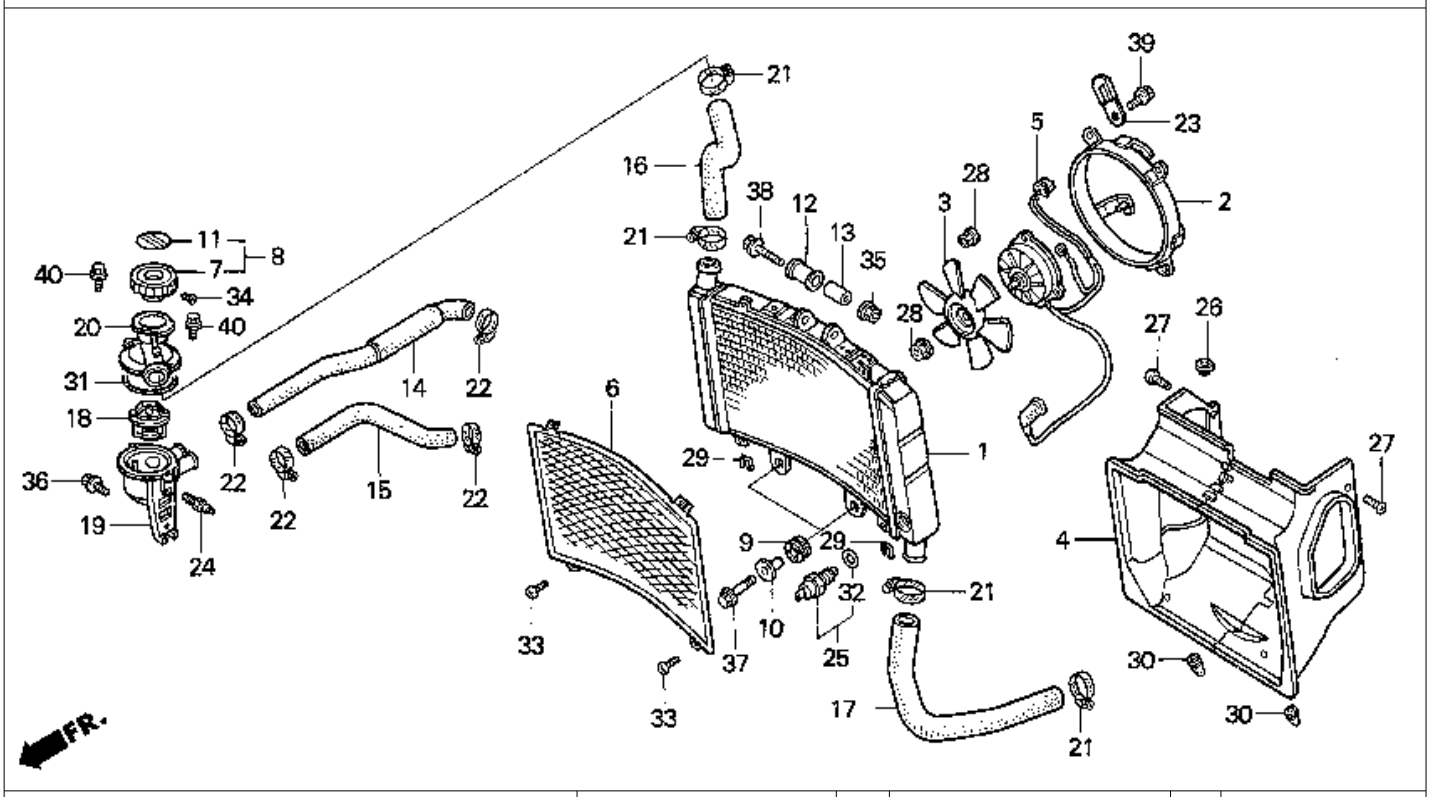

9 = PC800'89 6 = PC800'96
0 = PC800'90 7 = PC800'97
4 = PC800'94 8 = PC800'98
5 = PC800'95

Ref. No.	BLOCK NO. F-33 / DESCRIPTION	1989	1990	1994	1995	1996	1997	1998	AREA CODE	FRAME SERIAL FROM		FRAME NUMBER TO	QTY REQ	PART NUMBER
1	RADIATOR COMP.	9	0	4	5	6	7	8		.....		.....	1	19010-MR5-003
2	SHROUD COMP.	9	0	4	5	6	7	8		.....		.....	1	19015-MR5-003
3	FAN COMP., COOLING (TOYO)	9	0	4	5	6	7	8		.....		.....	1	19020-MM5-003
4	SHROUD ASSY.	9	0	4	5	6	7	8		.....		.....	1	19020-MR5-003
5	MOTOR, FAN	9	..	..	..	..	..	..		.....		.....	1	19030-MR5-004
	MOTOR, FAN	9	..	..	..	..	..	..		.....		.....	1	19030-MR5-871
		..	0	..	..	..	..	..	A	.....		LM101915	1	19030-MR5-871
		..	0	..	..	..	..	..	AC	.....		.....	1	19030-MR5-871
	MOTOR, FAN	9	..	4	5	6	7	8		.....		.....	1	19030-MR5-872
		..	0	..	..	..	..	..	A	.....		.....	1	19030-MR5-872
		..	0	..	..	..	..	..	AC	.....		.....	1	19030-MR5-872
6	GRILLE, RADIATOR	9	0	4	5	6	7	8		.....		.....	1	19032-MR5-000
7	CAP COMP., RADIATOR	9	0	..	..	..	..	..		.....		.....	1	19045-MR1-771
	CAP COMP., RADIATOR	9	0	..	..	..	..	..		.....		.....	1	19045-MY3-621
8	CAP COMP., RADIATOR	..	..	4	5	6	7	8		.....		.....	1	19045-MY3-671
9	RUBBER, RADIATOR SETTING	9	0	4	5	6	7	8		.....		.....	2	19051-KA3-830
10	COLLAR, RADIATOR SETTING	9	0	4	5	6	..	..		.....		.....	2	19052-KA3-830

 © AMERICAN HONDA MOTOR CO. INC. 1997

RADIATOR

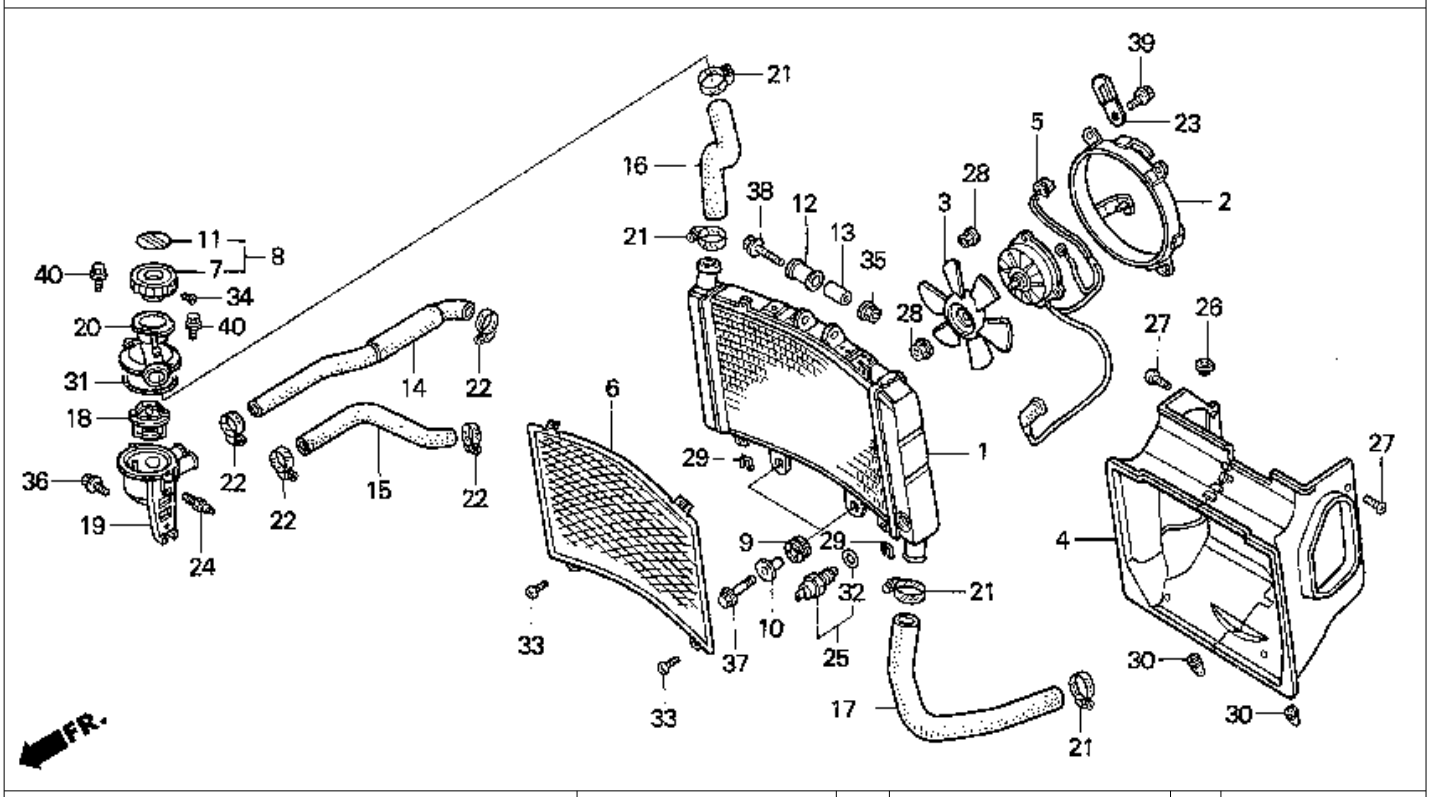

9 = PC800'89	6 = PC800'96								A				
0 = PC800'90	7 = PC800'97			PC800					R				
4 = PC800'94	8 = PC800'98								E			Q	
5 = PC800'95									A			T	
			1	1	1	1	1	1	1			Y	
			9	9	9	9	9	9	9	C			
			8	9	9	9	9	9	9	O	FRAME	R	
Ref.	BLOCK NO.	F-33	9	0	4	5	6	7	8	D	SERIAL NUMBER	E	
No.	DESCRIPTION		9	0	4	5	6	7	8	E	FROM TO	Q	PART NUMBER
10	COLLAR, RADIATOR MOUNTING		9	0	4	5	6	..	..		....	2	19052-MAC-680
	RUBBER, RADIATOR SETTING		..	..	..	..	..	7	8		....	2	19052-MN8-000
11	SEAL, RADIATOR CAP		..	..	4	5	6	7	8		....	1	19055-MV9-921
12	RUBBER, RADIATOR MOUNTING		9	0	4	5	6	7	8		....	1	19113-KM4-000
13	COLLAR, RADIATOR MOUNTING		9	0	4	5	6	7	8		....	1	19114-KM4-000
14	HOSE, WATER OUTLET (A)		9	0	4	5	6	7	8		....	1	19114-MR5-000
15	HOSE, WATER OUTLET (B)		9	0	4	5	6	7	8		....	1	19115-MR5-000
16	HOSE, RADIATOR (UPPER)		9	0	4	5	6	7	8		....	1	19116-MR5-000
17	HOSE, RADIATOR (LOWER)		9	0	4	5	6	7	8		....	1	19117-MR5-000
18	THERMOSTAT		9	0	4	5	6	7	8		....	1	19300-MB0-003
19	CASE, THERMOSTAT		9	0	4	5	6	7	8		....	1	19311-MR5-000
20	COVER, THERMOSTAT		9	0	4	5	6	7	8		....	1	19315-MR5-000
21	CLAMP, WATER HOSE		9	0	4	5	6	7	8		....	4	19505-ML3-770
22	CLAMP, WATER HOSE (B)		9	0	4	5	6	7	8		....	4	19506-KS6-700
23	CLIP, PULSER WIRE		9	0	4	5	6	7	8		....	1	32925-958-000
24	SENDING UNIT, WATER TEMPERATURE (ND)		9	0	4	5	6	7	8		....	1	37750-PC1-004

 © AMERICAN HONDA MOTOR CO. INC. 1997

RADIATOR

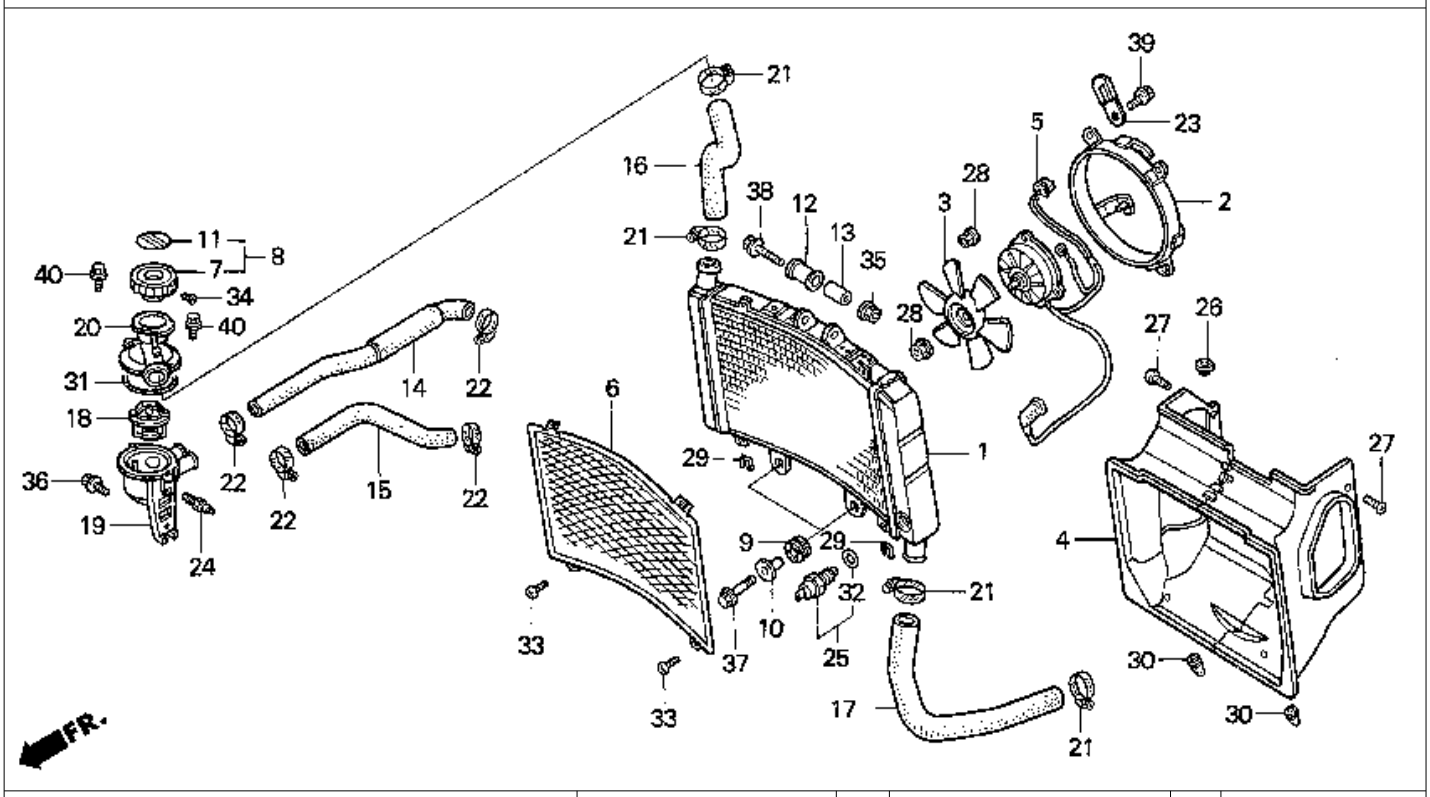

9 = PC800'89	6 = PC800'96								A				
0 = PC800'90	7 = PC800'97			PC800					R				
4 = PC800'94	8 = PC800'98								E			Q	
5 = PC800'95									A			T	
			1	1	1	1	1	1	1			Y	
			9	9	9	9	9	9	9	C			
			8	9	9	9	9	9	9	O	FRAME	R	
Ref.	BLOCK NO.	F-33	9	0	4	5	6	7	8	D	SERIAL NUMBER	E	
No.	DESCRIPTION		9	0	4	5	6	7	8	E	FROM TO	Q	PART NUMBER
25	SWITCH ASSY., THERMOSTAT		9	0	4	5	6	7	8		....	1	37760-MT2-003
26	GROMMET, WIRE WIRE		9	0	4	5	6	7	8		....	1	80101-166-000
27	SCREW, TRUSS (5X16)		9	0	4	5	6	7	8		....	4	90109-SB6-000
28	NUT, SERRATE (5MM)		9	0	4	5	6	7	8		....	4	90315-MK3-003
29	NUT, CLIP (4MM)		9	0	4	5	6	7	8		....	2	90344-MF9-000
30	PLUG, CONE TYPE		9	0	4	5	6	7	8		....	2	90899-422-610
31	O-RING (54X2)		9	0	4	5	6	7	8		....	1	91307-MB0-003
32	O-RING (13.5X1.4)		9	0	4	5	6	7	8		....	1	91307-PH7-660
	O-RING (13.5X1.4)		9	0	4	5	6	7	8		....	1	91307-611-000
33	SCREW, PAN (4X8)		9	0	4	5	6	7	8		....	2	93500-04008-0G
34	SCREW, TAPPING (3X6)		9	0	4	5	6	7	8		....	1	93901-22080
35	NUT, FLANGE (6MM)		9	0	4	5	6	7	8		....	1	94050-06000
36	BOLT, FLANGE (6X16)		9	0	4	5	6	7	8		....	1	95701-06016-00
37	BOLT, FLANGE (6X25)		9	0	4	5	6	7	8		....	2	95701-06025-00
38	BOLT, FLANGE (6X45)		9	0	4	5	6	7	8		....	1	95701-06045-00
	BOLT, FLANGE (6X45)		9	0	4	5	6	7	8		....	1	95701-06045-07
39	BOLT, FLANGE (6X10)		9	0	4	5	6	7	8		....	4	96001-06010-00
40	BOLT, FLANGE (6X20)		9	0	4	5	6	7	8		....	2	96001-06020-07

 © AMERICAN HONDA MOTOR CO. INC. 1997

RESERVE TANK

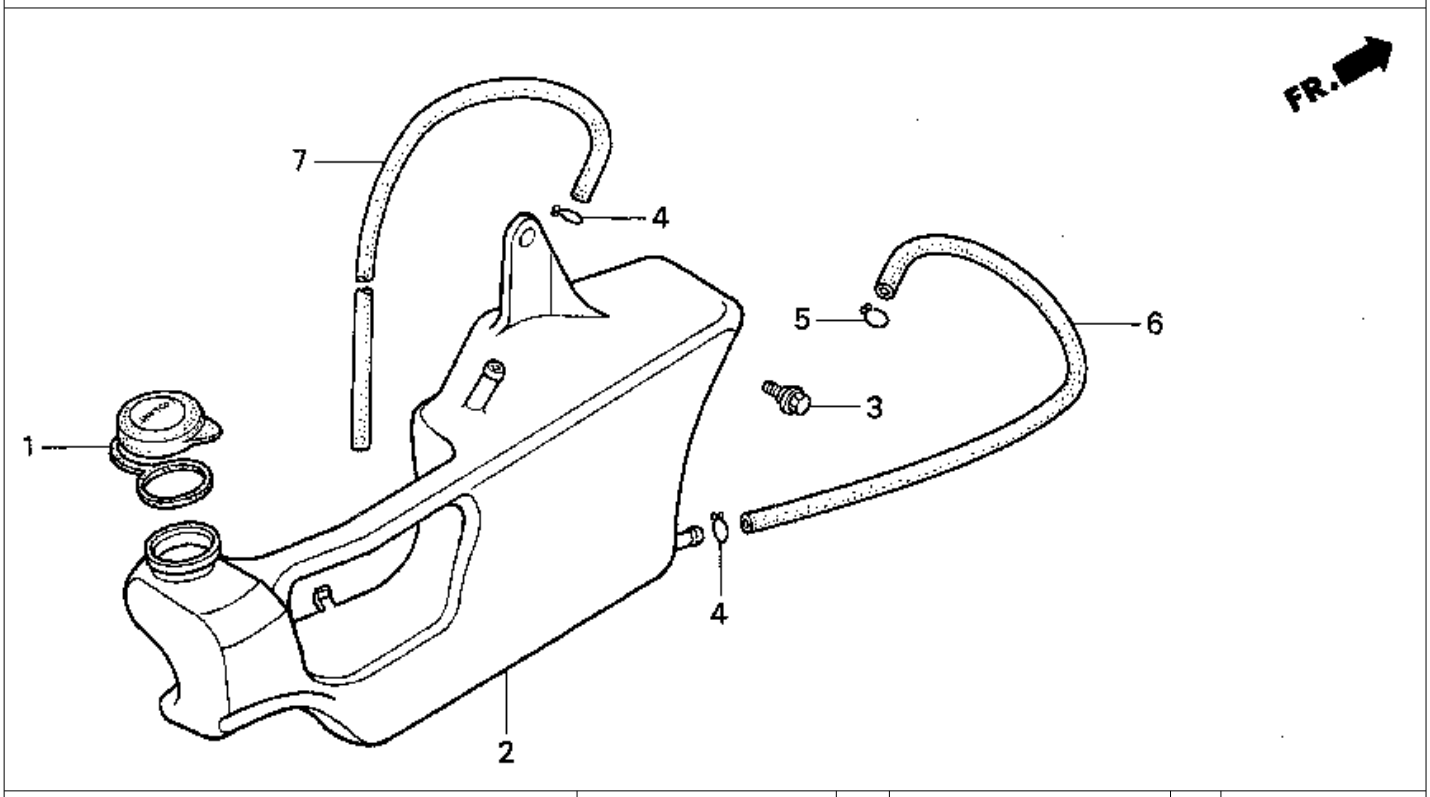

9 = PC800'89 6 = PC800'96
0 = PC800'90 7 = PC800'97
4 = PC800'94 8 = PC800'98
5 = PC800'95

Ref. No.	BLOCK NO. F-34 / DESCRIPTION	PC800 1989	1990	1994	1995	1996	1997	1998	AREA CODE	FRAME SERIAL NUMBER FROM		TO	QTY REQ	PART NUMBER
1	CAP, RESERVE TANK	9	0	4	5	6	7	8		.....		.....	1	19104-MB0-700
2	TANK, RADIATOR RESERVE	9	0	..	..	..	..	..		.....		.....	1	19110-MR5-000
	TANK, RADIATOR RESERVE	9	0	4	5	6	7	8		.....		.....	1	19110-MR5-010
3	BOLT, FLANGE (6MM)	9	0	4	5	6	7	8		.....		.....	1	90111-HC4-000
4	CLIP, TUBE (B12)	9	0	4	5	6	7	8		.....		.....	2	95002-02120
5	CLIP, TUBE (C11)	9	0	4	5	6	7	8		.....		.....	1	95022-70000
6	BULK HOSE, VACUUM (7.3X1000) (7.3X400)	9	0	4	5	6	7	8		.....		.....	1	95005-75001-20M
7	BULK HOSE, VACUUM (7.3X1000) (7.5X700)	9	0	4	5	6	7	8		.....		.....	1	95005-75001-20M

 © AMERICAN HONDA MOTOR CO. INC. 1997

FRAME

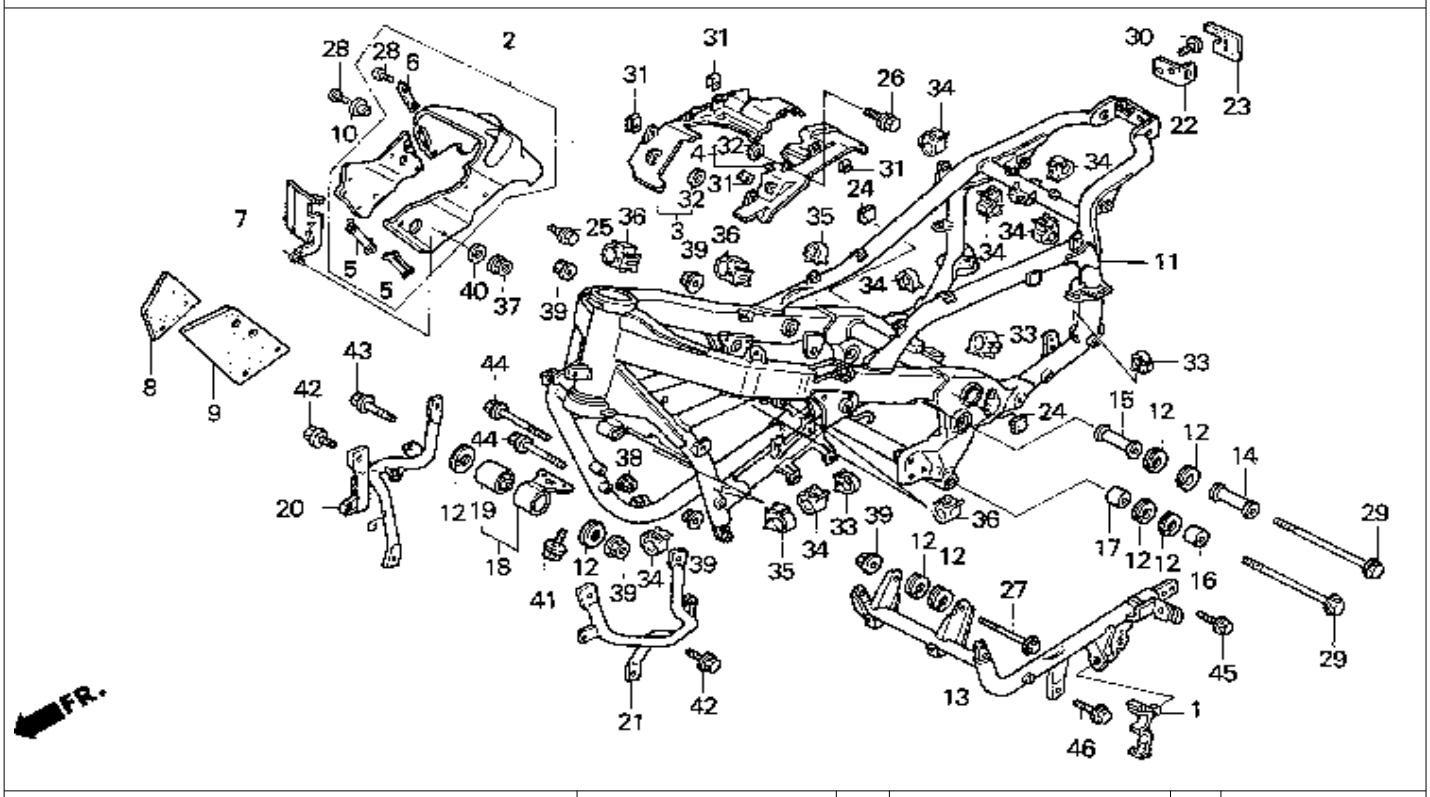

9 = PC800'89
0 = PC800'90
4 = PC800'94
5 = PC800'95
6 = PC800'96
7 = PC800'97
8 = PC800'98

Ref. No.	BLOCK NO. F-35 / DESCRIPTION	1989 / 9	1990 / 0	1994 / 4	1995 / 5	1996 / 6	1997 / 7	1998 / 8	AREA CODE	FRAME SERIAL NUMBER FROM	TO	QTY REQ	PART NUMBER
1	CLAMP, BYPASS HOSE	9	0	4	5	6	7	8		.....	.....	1	17404-PD6-003
2	COVER, ENGINE HEAT	9	0	4	5	6	7	8		.....	.....	1	19601-MR5-000
3	PLATE, R. ENGINE HEAT	9	0	4	5	6	7	8		.....	.....	1	19602-MR5-000
4	PLATE, L. ENGINE HEAT	9	0	4	5	6	7	8		.....	.....	1	19603-MR5-000
5	PATCH, ENGINE HEAT COVER (A)	9	0	4	5	6	7	8		.....	.....	2	19612-MR5-000
6	PATCH, ENGINE HEAT COVER (B)	9	0	4	5	6	7	8		.....	.....	1	19613-MR5-000
7	PLATE, AIR GUIDE	9	0	4	5	6	7	8		.....	.....	1	19616-MR5-000
8	RUBBER, R. WIND GUARD	9	0	4	5	6	7	8		.....	.....	1	19631-MR5-000
9	RUBBER, L. WIND GUARD	9	0	4	5	6	7	8		.....	.....	1	19632-MR5-000
10	COLLAR, TURN SIGNAL SETTING	9	0	4	5	6	7	8		.....	.....	1	33613-KG1-610
11	FRAME COMP.	9	..	..	..	..	..	..	A	.....	.....	1	50100-MR5-000
	FRAME COMP.	9	..	..	..	..	..	..	AC	.....	.....	1	50100-MR5-790
	FRAME COMP.	..	0	4	5	6	..	..	A	.....	.....	1	50100-MR5-870
	FRAME COMP.	..	0	4	5	6	..	..	AC	.....	.....	1	50100-MR5-890
	FRAME COMP.	..	..	..	..	..	7	8	A	.....	.....	1	50100-MR5-871
	FRAME COMP.	..	..	..	..	..	7	8	AC	.....	.....	1	50100-MR5-891

 © AMERICAN HONDA MOTOR CO. INC. 1997

FRAME

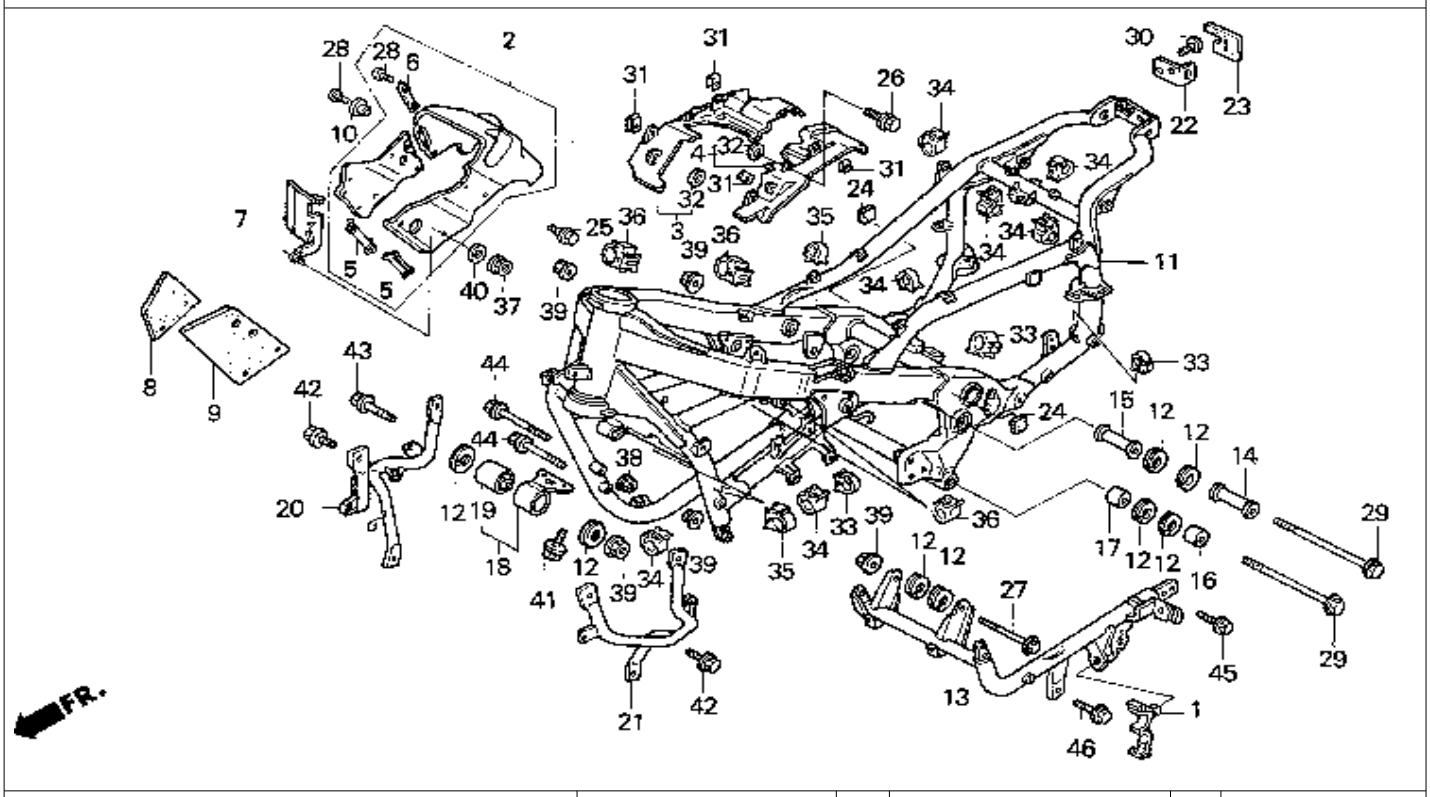

9 = PC800'89
0 = PC800'90
4 = PC800'94
5 = PC800'95
6 = PC800'96
7 = PC800'97
8 = PC800'98

Ref. No.	BLOCK NO. F-35 / DESCRIPTION	1989 / 9	1990 / 0	1994 / 4	1995 / 5	1996 / 6	1997 / 7	1998 / 8	AREA CODE	FRAME SERIAL NUMBER FROM	TO	QTY REQ	PART NUMBER
12	RUBBER, FR. THRUST MOUNTING	9	0	4	5	6	7	8		.....	.....	8	50201-KE5-000
13	SUB-FRAME COMP.	9	0	4	5	6	7	8		.....	.....	1	50210-MR5-000
14	COLLAR, ENGINE SETTING (A)	9	0	4	5	6	7	8		.....	.....	1	50251-MR5-000
15	COLLAR, ENGINE MOUNT (B)	9	0	4	5	6	7	8		.....	.....	1	50252-MR5-000
16	COLLAR, ENGINE MOUNT (C)	9	0	4	5	6	7	8		.....	.....	1	50253-MR5-000
17	COLLAR, ENGINE MOUNT (B)	9	0	4	5	6	7	8		.....	.....	1	50257-MR5-000
18	BRACKET COMP., ENGINE MOUNTING	9	..	..	..	..	..	..		.....	.....	1	50258-MR5-000
	BRACKET COMP., ENGINE MOUNTING	..	0	4	5	6	7	8		.....	.....	1	50258-MR5-870
19	RUBBER, ENGINE MOUNTING (E)	9	0	4	5	6	7	8		.....	.....	1	50260-MR5-000
20	BUMPER, R. FR.	9	0	4	5	6	7	8	A	.....	.....	1	64206-MR5-000
	BUMPER, R. FR.	9	0	4	5	6	7	8	AC	.....	.....	1	64206-MR5-790
21	BUMPER, L. FR.	9	0	4	5	6	7	8		.....	.....	1	64216-MR5-000
22	STRIKER, TAILGATE	9	0	4	5	6	7	8		.....	.....	1	74813-MR5-000
23	RUBBER G, SEAL	9	0	4	5	6	7	8		.....	.....	1	81363-MR5-000
24	RUBBER, COVER SETTING (LOWER)	9	0	4	5	6	7	8		.....	.....	2	83523-MR5-870
25	BOLT, RR. FENDER	9	0	4	5	6	7	8		.....	.....	3	90003-GC3-000

 © AMERICAN HONDA MOTOR CO. INC. 1997

FRAME

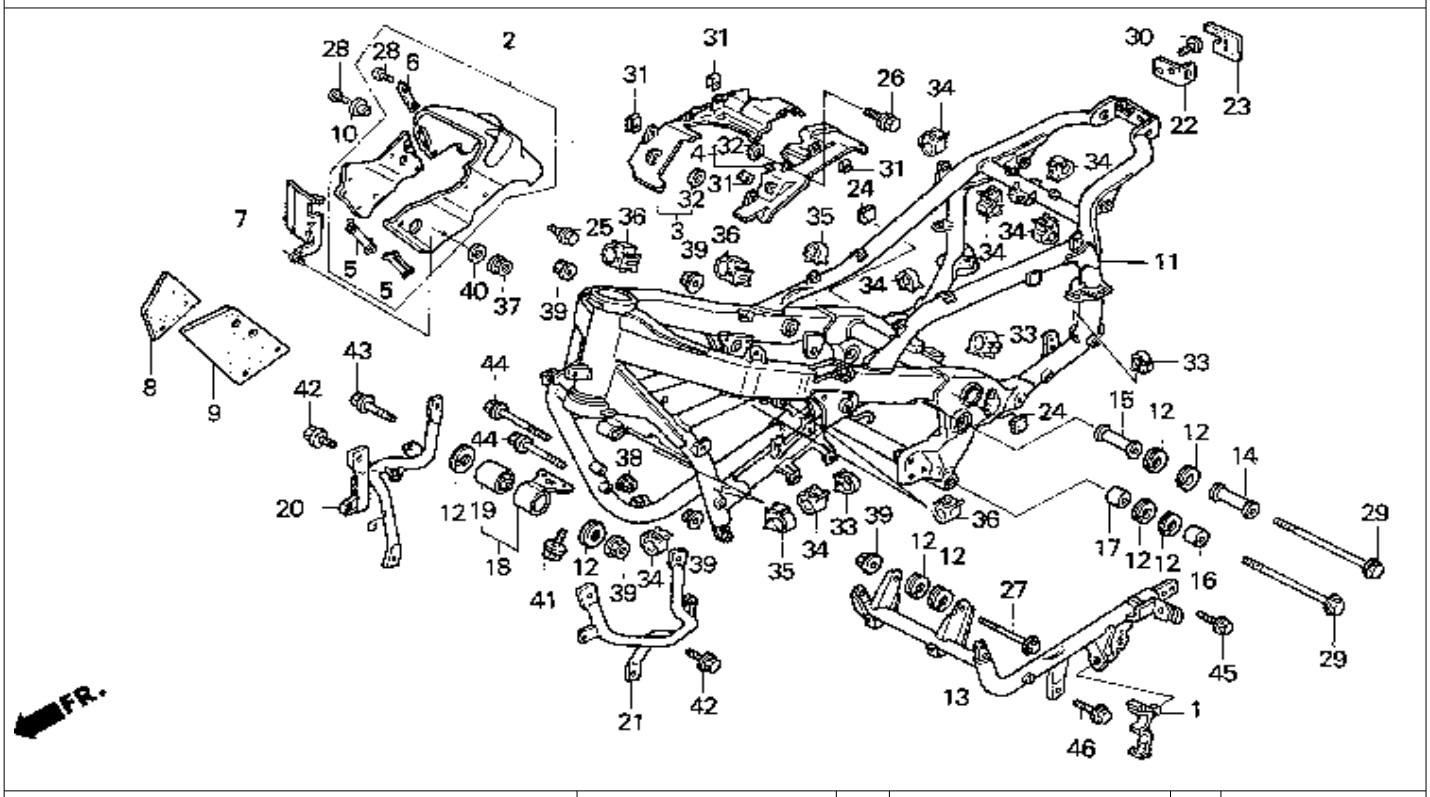

9 = PC800'89
0 = PC800'90
4 = PC800'94
5 = PC800'95
6 = PC800'96
7 = PC800'97
8 = PC800'98

Ref. No.	BLOCK NO. F-35 / DESCRIPTION	1989	1990	1994	1995	1996	1997	1998	AREA CODE	FRAME SERIAL FROM	FRAME NUMBER TO	QTY REQ	PART NUMBER
26	BOLT, FLANGE (6X16)	9	0	4	5	6	7	8		.....	.....	4	90029-888-000
27	BOLT, ENGINE HANGER (10X153)	9	0	4	5	6	7	8		.....	.....	1	90103-GA6-000
28	SCREW, TRUSS (5X16)	9	0	4	5	6	7	8		.....	.....	3	90109-SB6-000
29	BOLT, ENGINE HANGER (10X282)	9	0	4	5	6	7	8		.....	.....	2	90153-MR5-000
30	BOLT, SOCKET (10X17)	9	0	4	5	6	7	8		.....	.....	2	90157-MN8-000
31	NUT, SPRING (5MM)	9	0	4	5	6	7	8		.....	.....	4	90320-GC3-000
32	WASHER, CHAIN CASE SETTING	9	0	4	5	6	7	8		.....	.....	4	90522-028-000
33	CLIP, CABLE (10MM)	9	0	4	5	6	7	8		.....	.....	3	90690-GHB-641
34	CLIP, CABLE (15MM)	9	0	4	5	6	7	8		.....	.....	8	90690-GHB-651
35	CLIP, CABLE (20MM)	9	0	4	5	6	..	..		.....	.....	3	90690-GHB-661
		..	..	..	..	..	7	8		.....	.....	2	90690-GHB-661
36	CLIP, CABLE (20MM)	9	..	..	..	..	..	..		.....	.....	4	90690-GHB-661
	CLIP, CABLE (15MM)	..	0	4	5	6	7	8		.....	.....	4	90690-GHB-651
37	NUT, FLANGE (5MM)	9	..	..	..	..	..	..	A	.....	KM000392	1	94050-05000
		9	..	..	..	..	..	..	AC	.....	KM000075	1	94050-05000

 © AMERICAN HONDA MOTOR CO. INC. 1997

FRAME

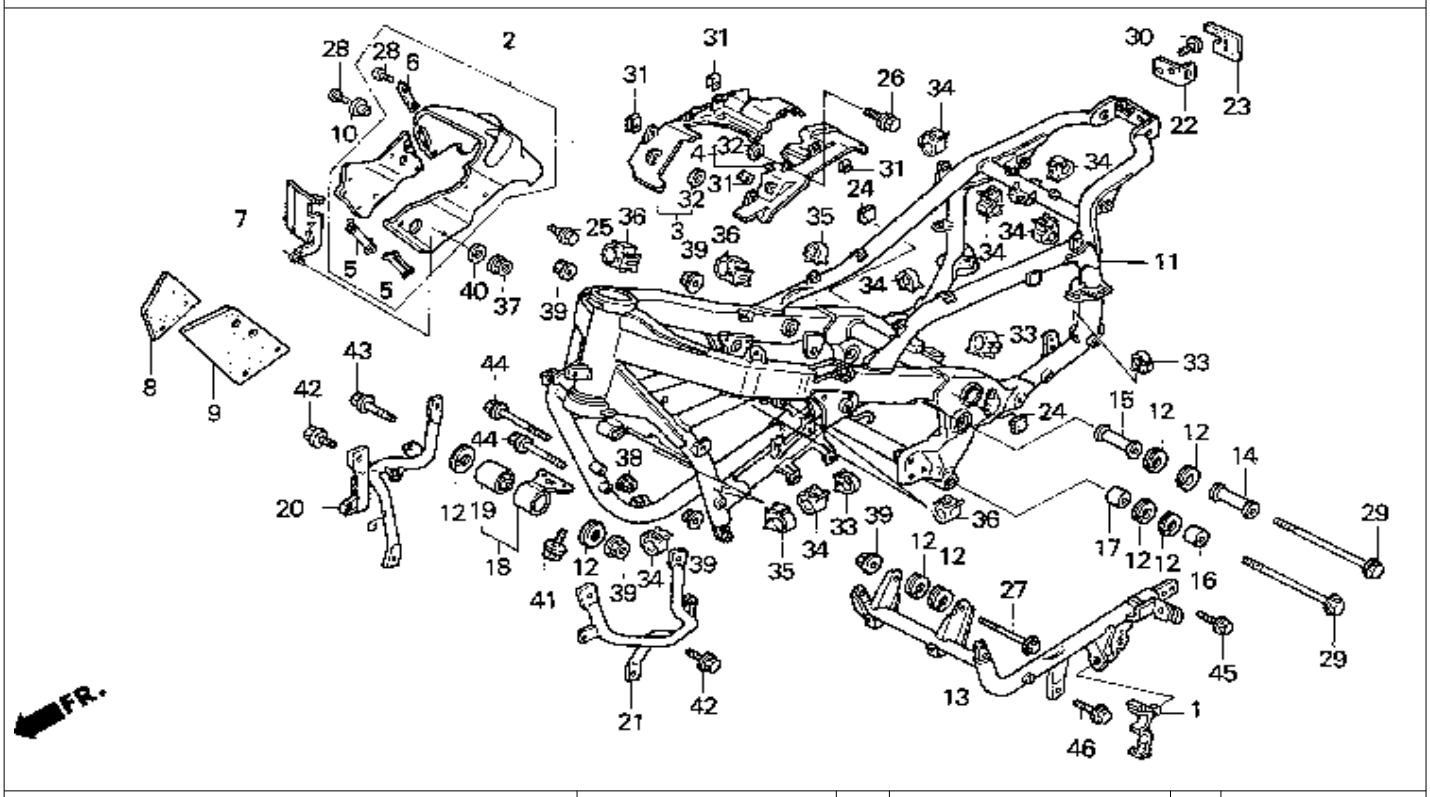

9 = PC800'89 6 = PC800'96
0 = PC800'90 7 = PC800'97
4 = PC800'94 8 = PC800'98
5 = PC800'95

Ref. No.	BLOCK NO. F-35 / DESCRIPTION	1989 / 9	1990 / 0	1994 / 4	1995 / 5	1996 / 6	1997 / 7	1998 / 8	AREA CODE	FRAME SERIAL NUMBER FROM	TO	QTY REQ	PART NUMBER
37	NUT, FLANGE (5MM)	9	..	..	..	..	..	..	A	.....	KM000393	1	90471-05080
		9	..	..	..	..	..	..	A	KM000393	.....	1	90471-05080
		9	..	..	..	..	..	..	AC	KM000076	.....	1	90471-05080
		..	0	4	5	6	7	8		.....	.....	1	90471-05080
38	NUT, FLANGE (8MM)	9	0	4	5	6	7	8		.....	.....	1	94050-05800
39	NUT, FLANGE (10MM)	9	0	..	..	..	..	..	A	.....	.....	1	94050-10080
		9	0	4	5	6	7	8		.....	.....	5	94050-10080
40	WASHER, PLAIN (5MM)	9	..	..	..	..	..	..	A	.....	KM000392	1	94103-05800
		9	..	..	..	..	..	..	AC	.....	KM000075	1	94103-05800
41	BOLT, FLANGE (8X16)	9	0	4	5	6	7	8		.....	.....	2	95701-08016-08
42	BOLT, FLANGE (8X18)	9	0	4	5	6	7	8		.....	.....	6	95701-08018-08
43	BOLT, FLANGE (10X55)	9	0	4	5	6	7	8		.....	.....	1	95701-10055-08
44	BOLT, FLANGE (8X80)	9	0	4	5	6	7	8		.....	.....	2	95801-08080-08
45	BOLT, FLANGE (10X25)	9	0	4	..	..	..	..		.....	.....	2	95801-10025-08
	BOLT, FLANGE (10X25)	9	0	4	5	6	7	8		.....	.....	2	95701-10025-08
46	BOLT, FLANGE (10X40)	9	0	4	5	6	7	8		.....	.....	2	95801-10040-08

 © AMERICAN HONDA MOTOR CO. INC. 1997

TOOLS

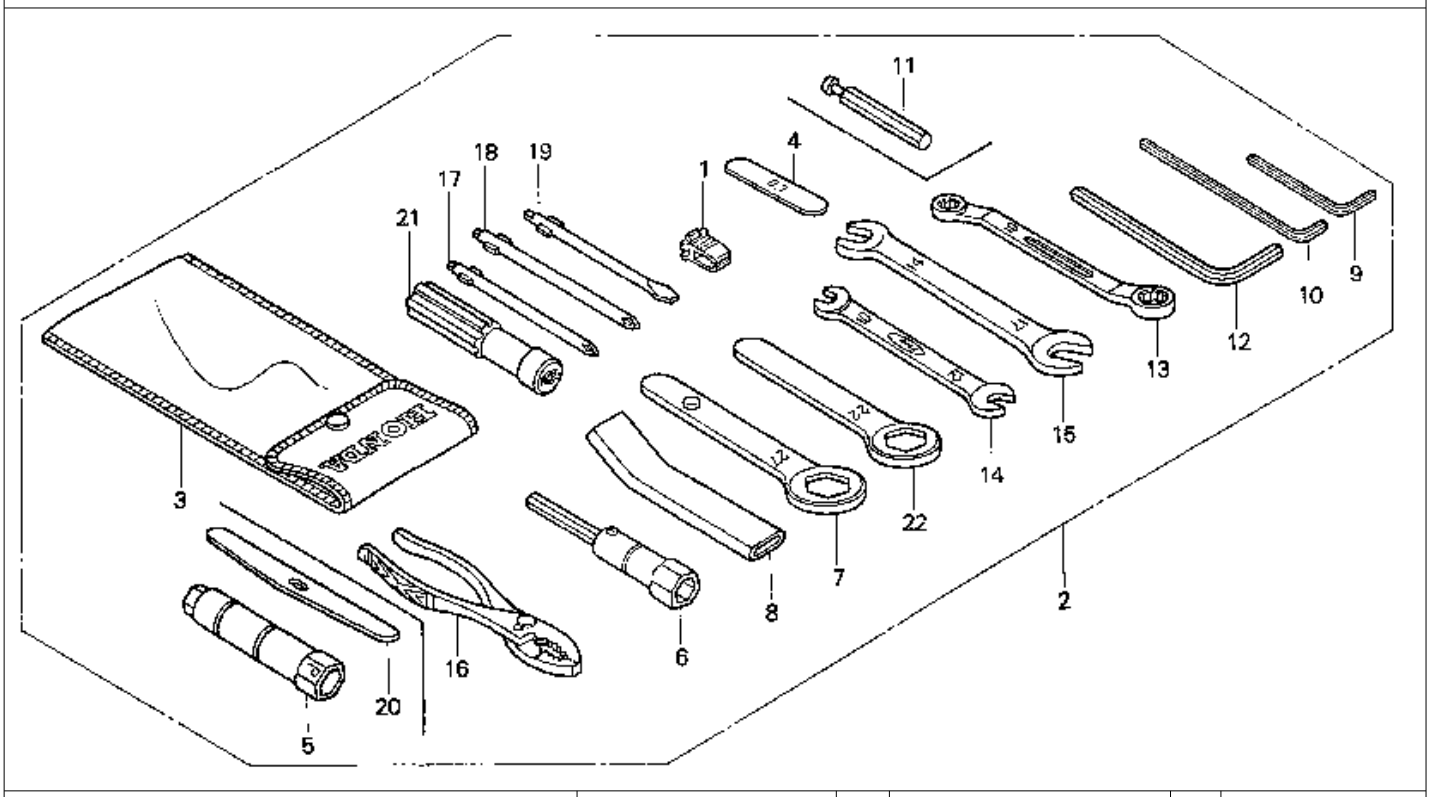

9 = PC800'89 6 = PC800'96
0 = PC800'90 7 = PC800'97
4 = PC800'94 8 = PC800'98
5 = PC800'95

Ref. No.	BLOCK NO. F-36 / DESCRIPTION	PC800 1989	1990	1994	1995	1996	1997	1998	AREA CODE	FRAME SERIAL NUMBER FROM		TO	QTY REQ	PART NUMBER
1	PULLER, FUSE (DAIICHI)	9	0	4	5	6	7	8		.....		.....	1	38235-SA5-004
2	TOOL SET	9	..	..	..	..	..	..		.....		.....	1	89010-MR5-000
	TOOL SET	..	0	4	5	..	..	..		.....		.....	1	89010-MR5-870
	TOOL SET	..	..	..	..	6	7	8		.....		.....	1	89010-MR5-830
3	BAG, TOOL	9	0	4	5	..	..	..		.....		.....	1	89101-KE9-000
	TOOL BAG	..	..	..	..	6	7	8		.....		.....	1	89101-ME5-670
	BAG, TOOL	..	..	..	..	6	7	8		.....		.....	1	89101-300-010
	BAG, TOOL (200MM	..	..	..	..	6	7	8		.....		.....	1	99008-02000
4	GAUGE, FEELER (0.7)	9	0	4	5	6	7	8		.....		.....	1	89103-371-000
5	WRENCH, BOX (18X10)	9	..	..	..	..	..	..		.....		.....	1	89216-MR5-000
6	WRENCH, BOX (18MM)	..	0	4	5	..	..	..		.....		.....	1	89216-MR5-870
	WRENCH, BOX (18MM)	..	..	..	..	6	7	8		.....		.....	1	89216-MR5-830
	WRENCH, BOX (P18)	..	..	..	..	6	7	8		.....		.....	1	89216-MY1-000
7	WRENCH, EYE (27MM)	9	..	..	..	..	..	..		.....		.....	1	89218-MR5-000
	WRENCH, EYE (27MM)	..	0	4	5	..	..	..		.....		.....	1	99006-27000
	EYE WRENCH (27MM)	..	..	..	..	6	7	8		.....		.....	1	89229-MN5-000

 © AMERICAN HONDA MOTOR CO. INC. 1997

TOOLS

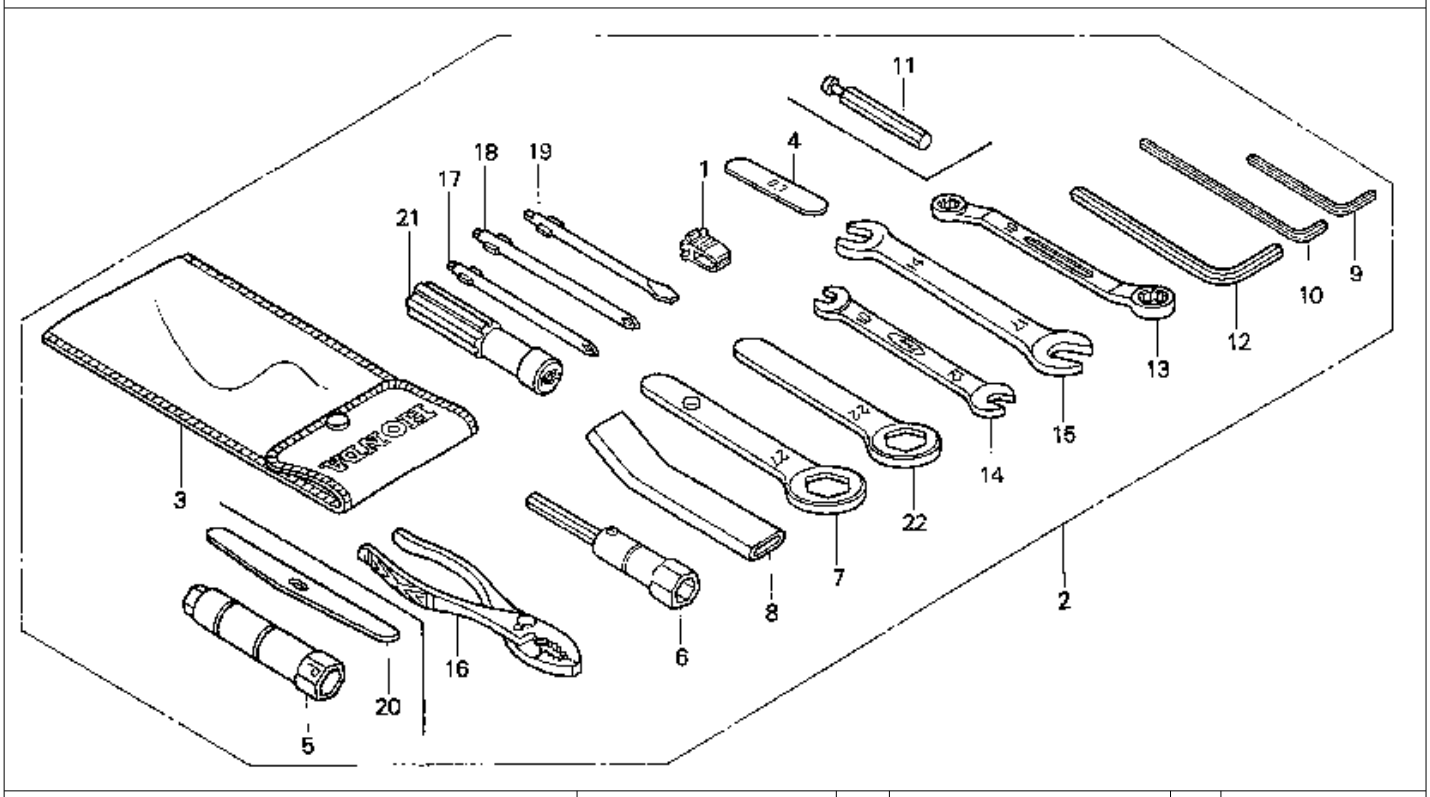

9 = PC800'89 6 = PC800'96
0 = PC800'90 7 = PC800'97
4 = PC800'94 8 = PC800'98
5 = PC800'95

Ref. No.	BLOCK NO. F-36 / DESCRIPTION	PC800 1989	1990	1994	1995	1996	1997	1998	AREA CODE	FRAME SERIAL FROM		FRAME NUMBER TO	QTY REQ	PART NUMBER
8	HANDLE, EYE WRENCH	9	..	..	..	..	..	..		.....		.....	1	89219-MR5-000
	HANDLE, EYE WRENCH	9	..	..	..	6	7	8		.....		.....	1	89219-MR5-830
	HANDLE, EYE WRENCH	..	0	4	5	..	..	..		.....		.....	1	89219-MR5-870
9	WRENCH, HEX. (5MM)	9	0	4	5	6	7	8		.....		.....	1	89221-MR5-000
10	WRENCH, HEX. (6MM)	9	0	4	5	6	7	8		.....		.....	1	89221-371-000
11	WRENCH, HEX. (10MM)	9	..	..	..	..	..	..		.....		.....	1	89222-MR5-000
12	WRENCH, HEX. (8MM)	9	0	4	5	6	7	8		.....		.....	1	89222-371-000
13	WRENCH, EYE (10X12)	9	0	4	5	..	..	..		.....		.....	1	89227-461-000
	EYE WRENCH (10X12)	..	..	..	..	6	7	8		.....		.....	1	89227-MN5-000
14	WRENCH (10X12) (OPEN END)	9	0	4	5	..	..	..		.....		.....	1	99001-10120
	WRENCH (10X12) (OPEN END)	..	..	..	..	6	7	8		.....		.....	1	89226-MN5-000
15	WRENCH (14X17) (OPEN END)	9	0	4	5	..	..	..		.....		.....	1	99002-13500
	SPANNER (14X17)	..	..	..	..	6	7	8		.....		.....	1	89210-KW9-000
16	PLIERS (135MM)	9	0	4	5	..	..	..		.....		.....	1	99002-10000
	PLIERS (135)	..	..	..	..	6	7	8		.....		.....	1	89210-KW9-000

 © AMERICAN HONDA MOTOR CO. INC. 1997

TOOLS

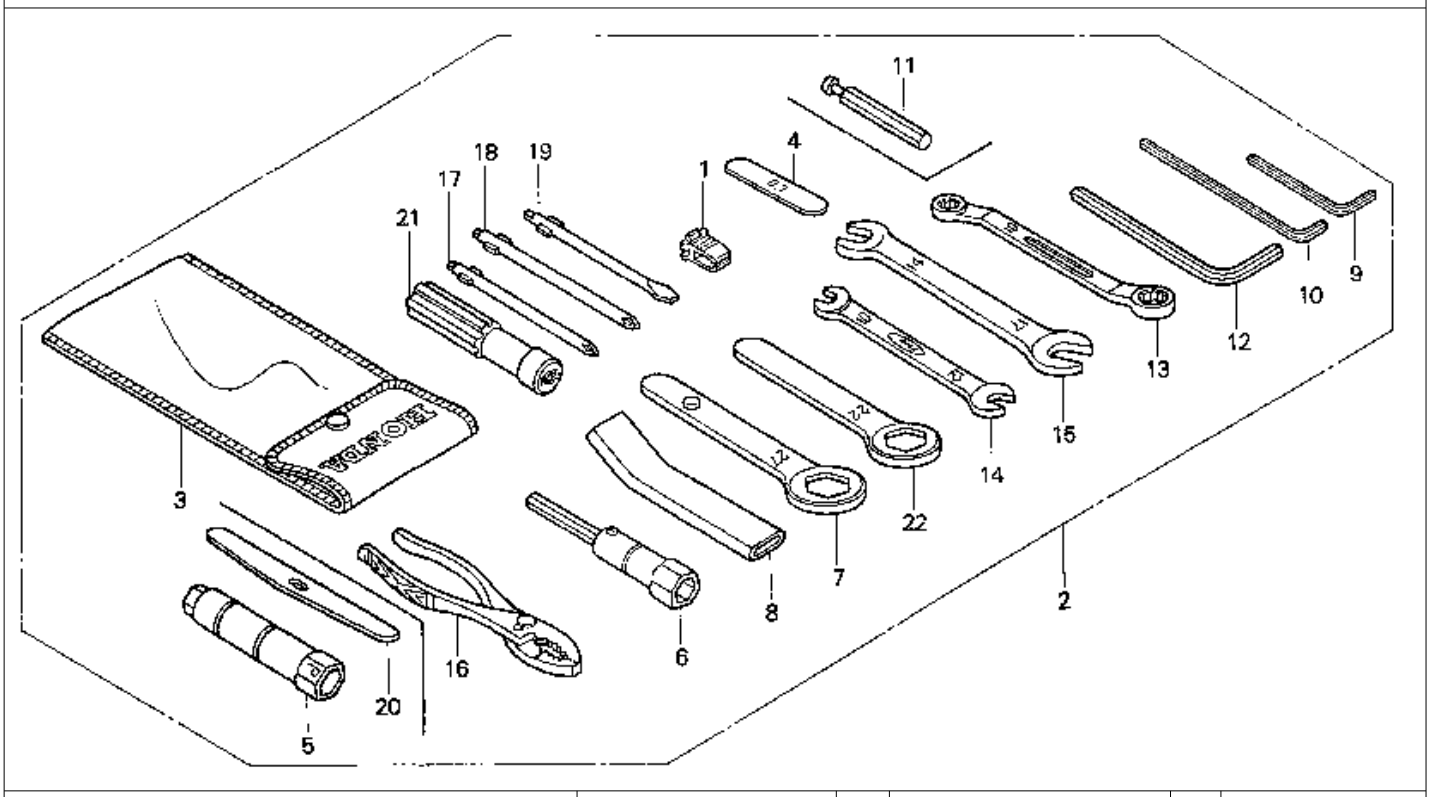

9 = PC800'89 6 = PC800'96
0 = PC800'90 7 = PC800'97
4 = PC800'94 8 = PC800'98
5 = PC800'95

Ref. No.	BLOCK NO. F-36 / DESCRIPTION	PC800 1989	1990	1994	1995	1996	1997	1998	AREA CODE	FRAME SERIAL NUMBER FROM		TO	QTY REQ	PART NUMBER
17	DRIVER 1, PLUS SCREW (NO.2)	9	0	4	5	..	..	..		.....		.....	1	99003-10000
	SCREW DRIVER 2, PHILLIPS	..	..	..	..	6	7	8		.....		.....	1	89227-422-000
18	DRIVER 2, PLUS SCREW (NO.3)	9	0	4	5	..	..	..		.....		.....	1	99003-20000
	SCREW DRIVER 3, PHILLIPS	..	..	..	..	6	7	8		.....		.....	1	89228-422-000
19	SCREW DRIVER 3, STRAIGHT SLOT (NO.2)	9	0	4	5	..	..	..		.....		.....	1	99003-30000
	SCREW DRIVER 2, STRAIGHT SLOT	..	..	..	..	6	7	8		.....		.....	1	89229-422-000
20	LEVER, TYRE	9	..	..	..	..	..	..		.....		.....	1	99003-40000
21	GRIP	9	0	4	5	6	7	8		.....		.....	1	99003-50000
22	WRENCH, EYE (22MM)	9	0	4	5	..	..	..		.....		.....	1	99006-22000
	EYE WRENCH (22)	..	..	..	..	6	7	8		.....		.....	1	89255-MN5-000

 © AMERICAN HONDA MOTOR CO. INC. 1997

WINDSCREEN

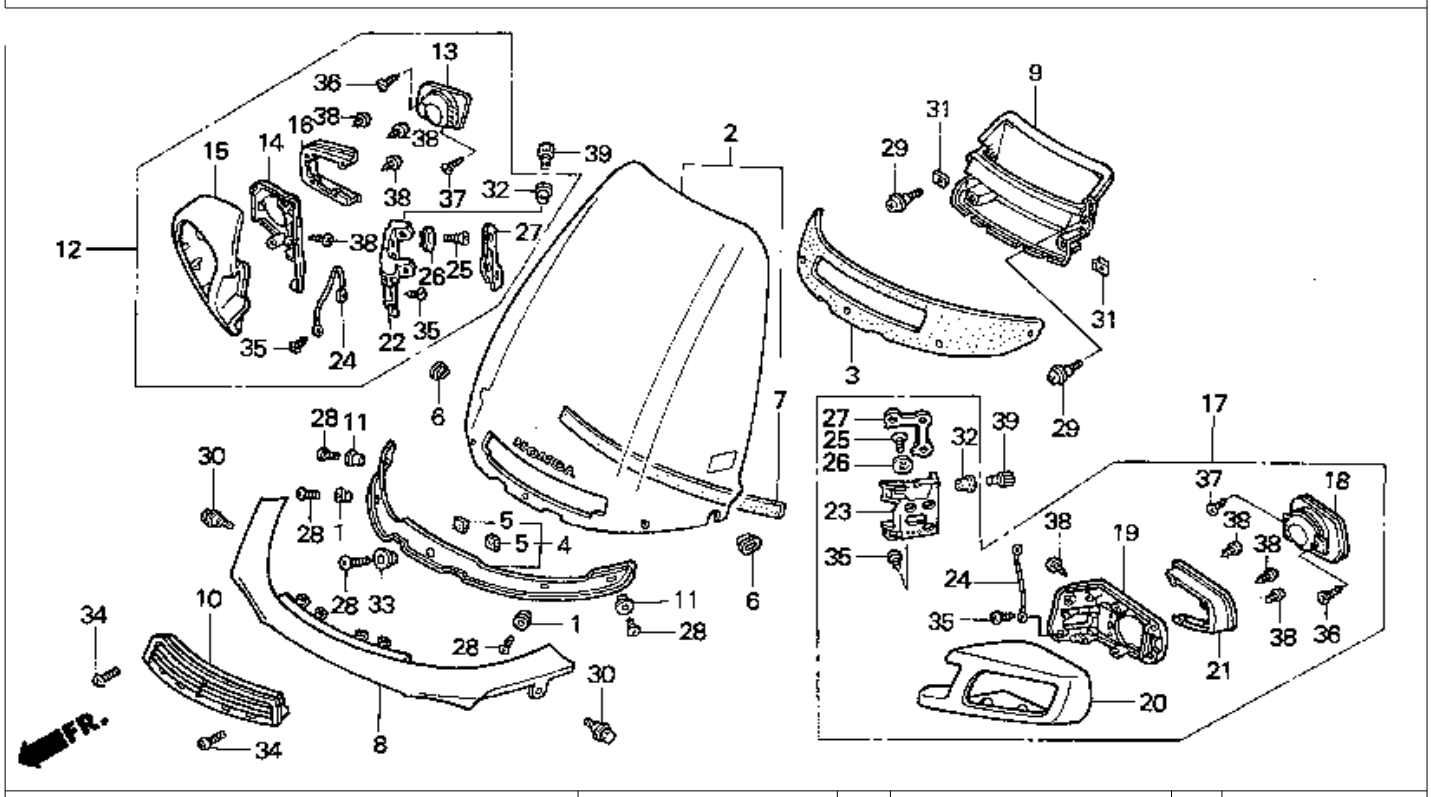

9 = PC800'89	6 = PC800'96							A				
0 = PC800'90	7 = PC800'97		PC800					R				
4 = PC800'94	8 = PC800'98							E			Q	
5 = PC800'95								A			T	
			1	1	1	1	1	1	1		Y	
			9	9	9	9	9	9	9	C		
			8	9	9	9	9	9	9	O	FRAME	R	
Ref.	BLOCK NO.	F-37	9	0	4	5	6	7	8	D	SERIAL NUMBER	E	
No.	DESCRIPTION		9	0	4	5	6	7	8	E	FROM TO	Q	PART NUMBER
1	COLLAR, HANDLE COVER SETTING		9	0	4	5	6	7	8		....	2	53204-HB5-670
2	SCREEN, WIND		9	..	..	..	..	..	..		....	1	64100-MR5-000
	SCREEN, WIND		..	0	..	..	..	..	..		....	1	64100-MR5-870
	SCREEN, WIND		..	..	4	5	6	7	8		....	1	64100-MR5-800
3	RUBBER, WINDSCREEN		9	0	4	5	6	7	8		....	1	64101-MR5-000
4	PLATE, WINDSCREEN SETTING		9	0	4	5	6	7	8		....	1	64102-MR5-000
5	RUBBER		9	0	4	5	6	7	8		....	2	64105-MR5-000
6	COLLAR, SCREEN SETTING		9	0	4	5	6	7	8		....	2	64107-MR5-000
7	RUBBER, SCREEN		..	0	4	5	6	7	8		....	1	64109-MR5-870
8	GARNISH, SCREEN *NH251P*												
	(PACIFIC WHITE)		9	..	..	..	..	..	..		....	1	64110-MR5-000ZA
	GARNISH, SCREEN *R101CU*												
	(CANDY GLORY RED)		..	0	..	..	..	..	..		....	1	64110-MR5-000ZB
	GARNISH, SCREEN *NH1Z*												
	(BLACK-Z)		..	..	4	5	..	..	..		....	1	64110-MR5-800ZA
	GARNISH, SCREEN *R201*												
	(MAGNA RED)		..	..	..	..	6	7	8		....	1	64110-MR5-800ZB

 © AMERICAN HONDA MOTOR CO. INC. 1997

WINDSCREEN

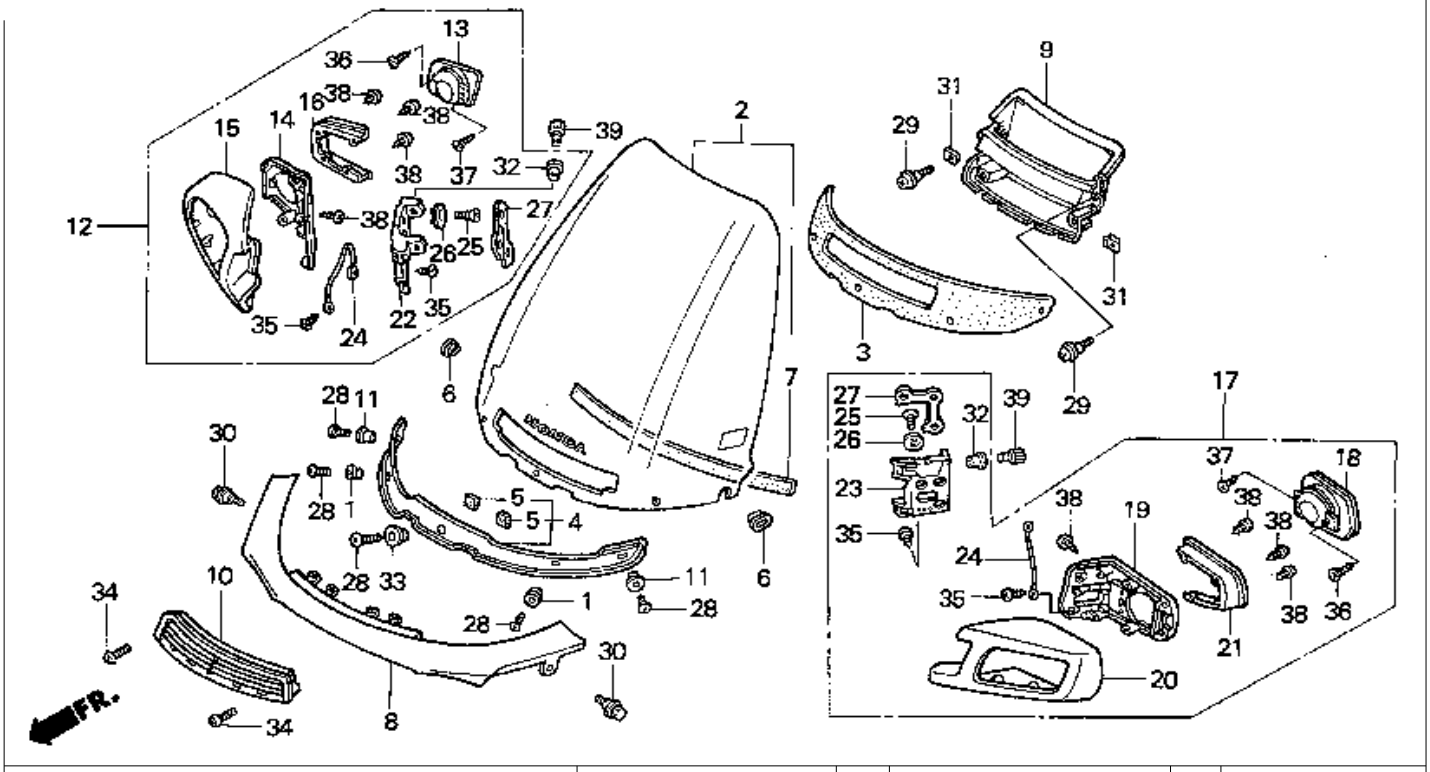

9 = PC800'89	6 = PC800'96											
0 = PC800'90	7 = PC800'97											
4 = PC800'94	8 = PC800'98											
5 = PC800'95												
		PC800							AREA			QTY
		1998	1999	1999	1999	1999	1999	1998	CODE	FRAME		REQ
Ref. No.	BLOCK NO. F-37 / DESCRIPTION	9	0	4	5	6	7	8		SERIAL FROM	NUMBER TO		PART NUMBER
9	DUCT COMP., SCREEN AIR *NH252* (ATLANTIC GRAY)	9	..	..	..	..	..	..		.....	.....	1	64120-MR5-000ZB
	DUCT COMP., SCREEN AIR *NH252* (ATLANTIC GRAY)	..	0	4	5	..	..	..		.....	.....	1	64120-MR5-000ZA
	DUCT COMP., SCREEN AIR *NH1* (BLACK)	..	..	..	..	6	7	8		.....	.....	1	64120-MR5-A20ZA
10	LOUVRE, WINDSCREEN	9	0	4	5	6	7	8		.....	.....	1	64125-MR5-000
11	COLLAR, TAILLIGHT SETTING	9	0	4	5	6	7	8		.....	.....	2	84706-KN9-830
12	MIRROR ASSY., R. *NH251P* (PACIFIC WHITE)	9	..	..	..	..	..	..		.....	.....	1	88110-MR5-013ZA
	MIRROR ASSY., R. *NH251P* (PACIFIC WHITE)	9	..	..	..	..	..	..		.....	.....	1	88110-MR5-870ZA
	MIRROR ASSY., R. *R101CU* (CANDY GLORY RED)	..	0	..	..	..	..	..		.....	.....	1	88110-MR5-870ZC
	MIRROR ASSY., R. *NH1Z* (BLACK-Z)	..	..	4	5	..	..	..		.....	.....	1	88110-MR5-870ZE
	MIRROR ASSY., R. *R201* (MAGNA RED)	..	..	..	..	6	7	8		.....	.....	1	88110-MR5-870ZF

 © AMERICAN HONDA MOTOR CO. INC. 1997

WINDSCREEN

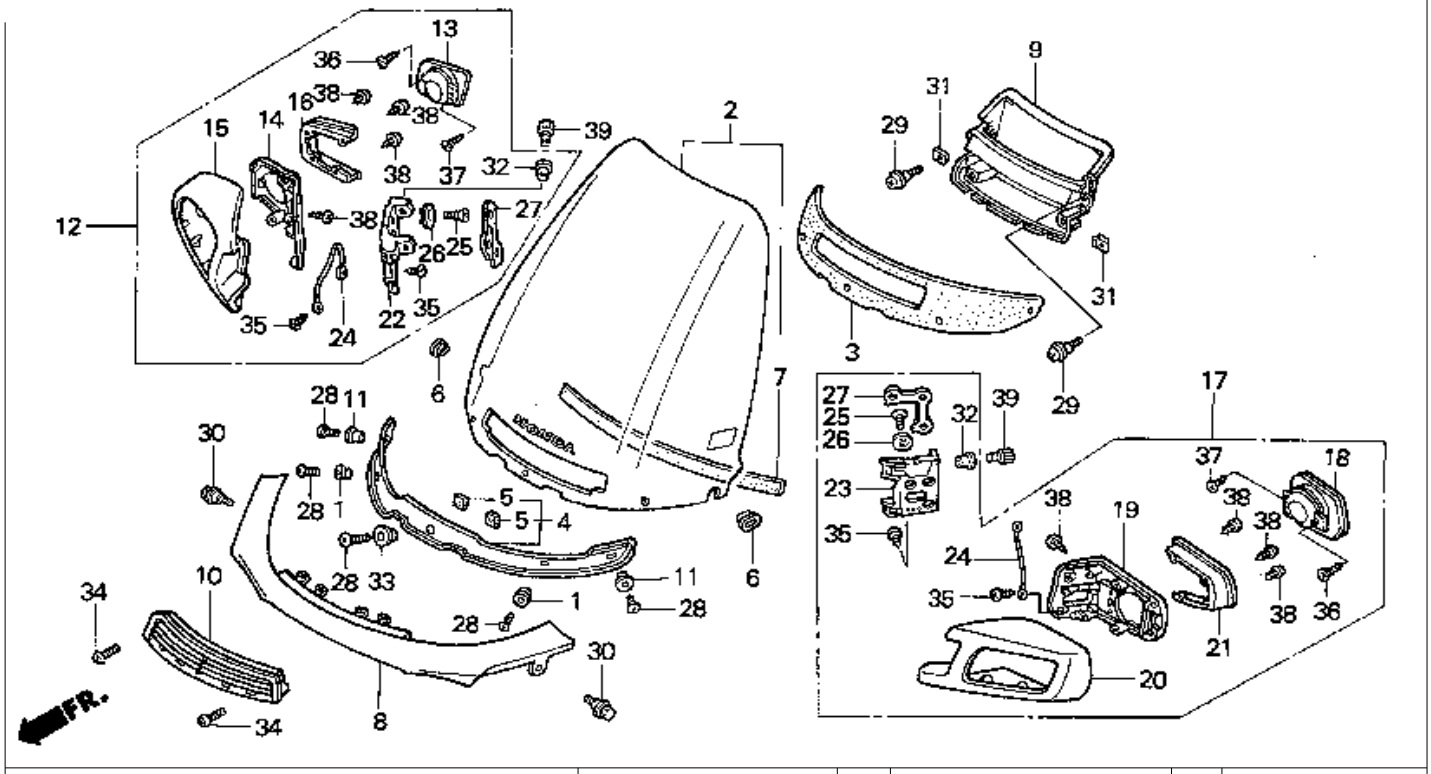

9 = PC800'89	6 = PC800'96								A				
0 = PC800'90	7 = PC800'97			PC800					R				
4 = PC800'94	8 = PC800'98								E			Q	
5 = PC800'95									A			T	
			1	1	1	1	1	1	1			Y	
			9	9	9	9	9	9	9	C			
			8	9	9	9	9	9	9	O	FRAME	R	
Ref.	BLOCK NO.	F-37	9	0	4	5	6	7	8	D	SERIAL NUMBER	E	
No.	DESCRIPTION		9	0	4	5	6	7	8	E	FROM TO	Q	PART NUMBER
13	MIRROR, R.		9	0	4	5	6	7	8		....	1	88111-MR5-003
14	BRACKET COMP., R. MIRROR		9	0	4	5	6	7	8		....	1	88112-MR5-003
15	HOUSING, R. *NH251P*												
	(PACIFIC WHITE)		9	..	..	..	..	..	..		....	1	88115-MR5-013ZA
	HOUSING, R. *R101CU*												
	(CANDY GLORY RED)		..	0	..	..	..	..	..		....	1	88115-MR5-013ZC
	HOUSING, R. *NH1Z*												
	(BLACK-Z)		..	..	4	5	6	..	..		....	1	88115-MR5-013ZE
	HOUSING, R. *R201*												
	(MAGNA RED)		..	..	..	..	..	7	8		....	1	88115-MR5-013ZG
16	VISOR, R. *NH251P*												
	(PACIFIC WHITE)		9	..	..	..	..	..	..		....	1	88116-MR5-013ZA
	VISOR, R. *R101CU*												
	(CANDY GLORY RED)		..	0	..	..	..	..	..		....	1	88116-MR5-013ZC
	VISOR, R. *NH1Z*												
	(BLACK-Z)		..	..	4	5	6	..	..		....	1	88116-MR5-013ZE
	VISOR, R. *R201*												
	(MAGNA RED)		..	..	..	..	..	7	8		....	1	88116-MR5-013ZG

 © AMERICAN HONDA MOTOR CO. INC. 1997

NOTE: REF NO. 16 VISOR, R . *R201* PART NO. 88116-MR5-013ZG THIS COULD BE A MISTAKE ON THE FICHE AS THE MAGNA RED CODE IS ZF THE LEFT PART IS CODED 88126-MR5-013ZF

WINDSCREEN

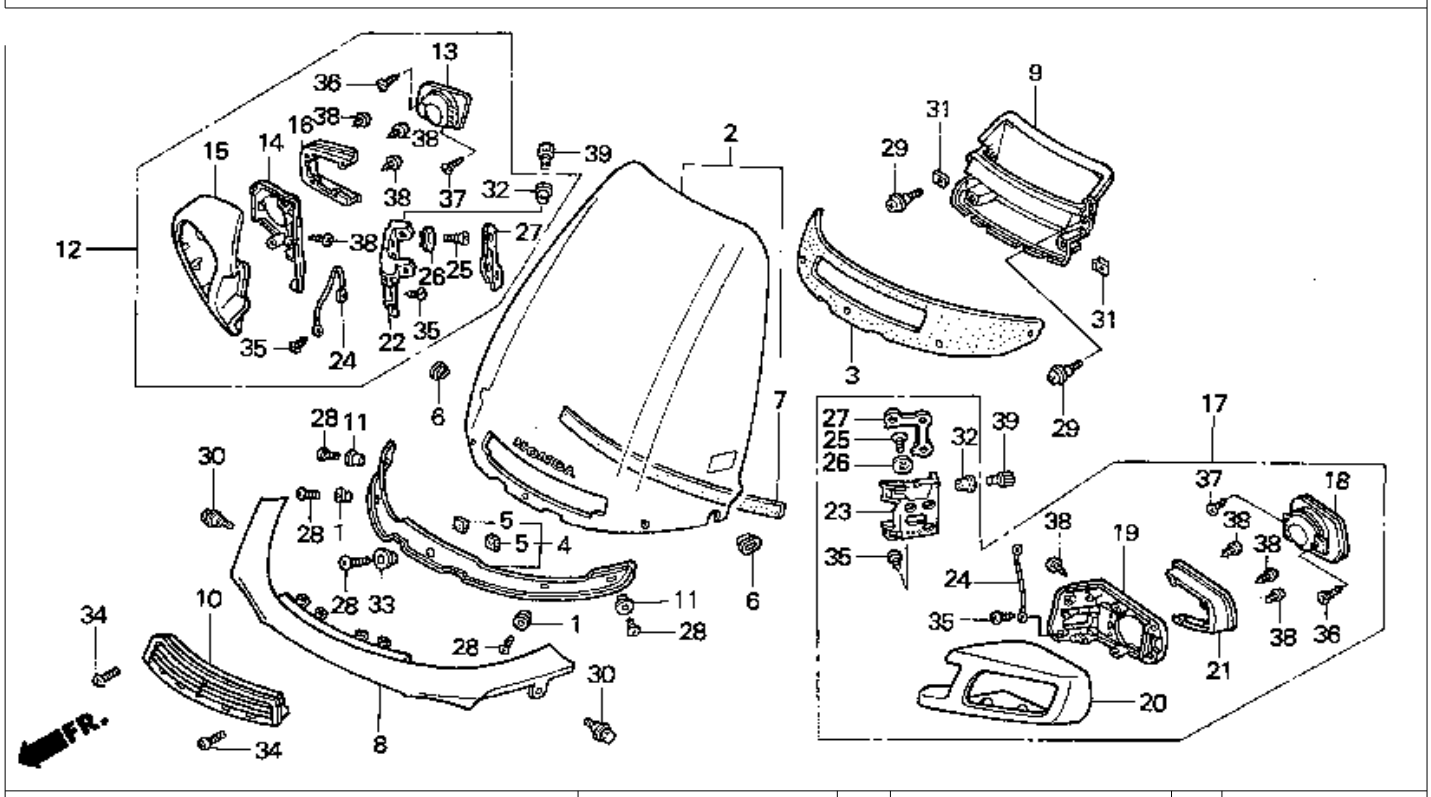

9 = PC800'89	6 = PC800'96												
0 = PC800'90	7 = PC800'97												
4 = PC800'94	8 = PC800'98												
5 = PC800'95													
			PC800							AREA			QTY
			1989	1990	1994	1995	1996	1997	1998	CODE	FRAME		REQ
Ref. No.	BLOCK NO. F-37 / DESCRIPTION		9	0	4	5	6	7	8		SERIAL FROM	NUMBER TO		PART NUMBER
17	MIRROR ASSY., L. *NH251P* (PACIFIC WHITE)		9	..	..	..	..	..	..		.....	.....	1	88120-MR5-013ZA
	MIRROR ASSY., L. *NH251P* (PACIFIC WHITE)		9	..	..	..	..	..	..		.....	.....	1	88120-MR5-870ZA
	MIRROR ASSY., L. *R101CU* (CANDY GLORY RED)		..	0	..	..	..	..	..		.....	.....	1	88120-MR5-870ZC
	MIRROR ASSY., L. *NH1Z* (BLACK-Z)		..	..	4	5	..	..	..		.....	.....	1	88120-MR5-870ZE
	MIRROR ASSY., L. *R201* (MAGNA RED)		..	..	..	..	6	7	8		.....	.....	1	88120-MR5-870ZF
18	MIRROR, L.		9	0	4	5	6	7	8		.....	.....		88121-MR5-003
19	BRACKET COMP., L. MIRROR		9	0	4	5	6	7	8		.....	.....		88122-MR5-003
20	HOUSING, L. *NH251P* (PACIFIC WHITE)		9	..	..	..	..	..	..		.....	.....	1	88125-MR5-013ZA
	HOUSING, L. *R101CU* (CANDY GLORY RED)		..	0	..	..	..	..	..		.....	.....	1	88125-MR5-013ZC
	HOUSING, L. *NH1Z* (BLACK-Z)		..	..	4	5	6	..	..		.....	.....	1	88125-MR5-013ZE

 © AMERICAN HONDA MOTOR CO. INC. 1997

WINDSCREEN

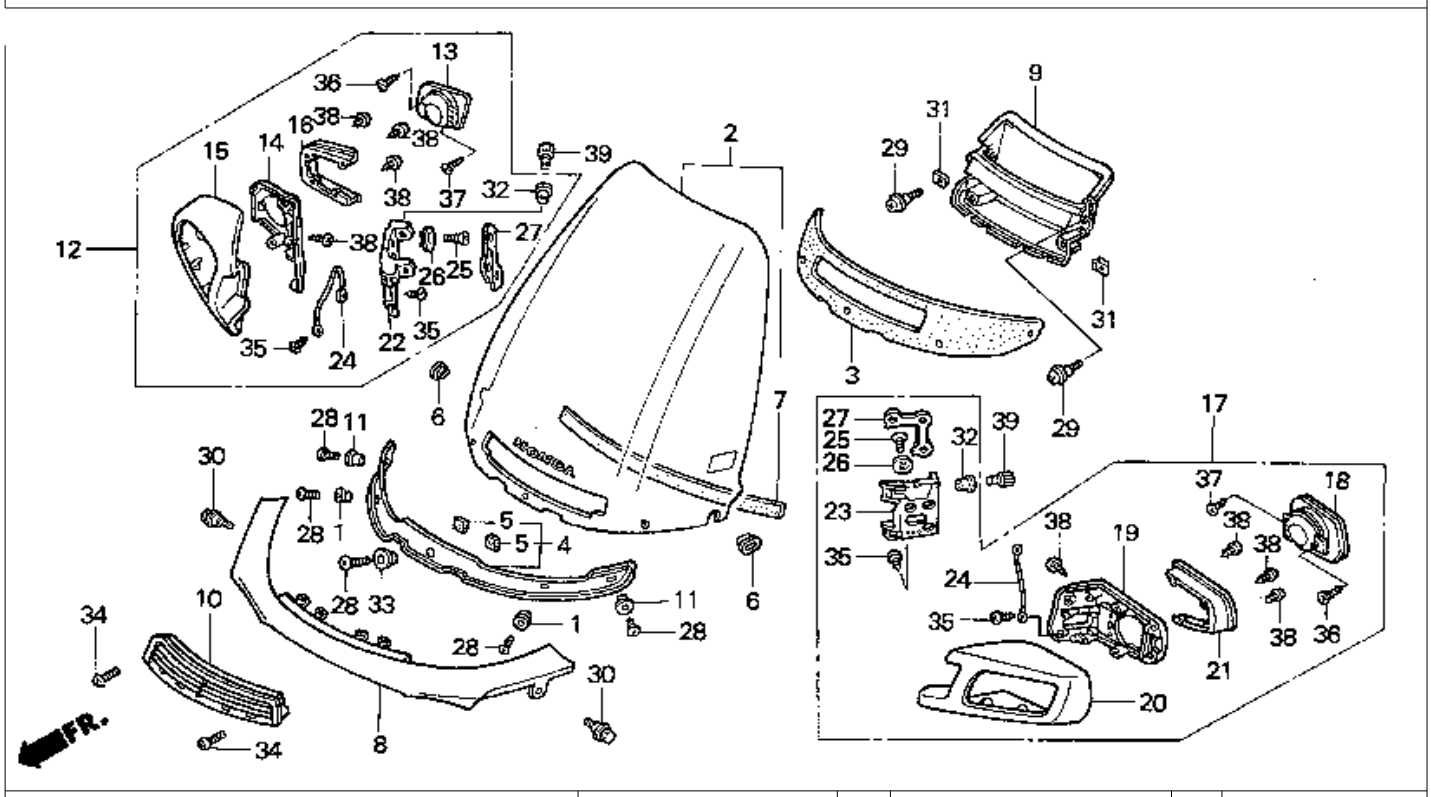

9 = PC800'89
0 = PC800'90
4 = PC800'94
5 = PC800'95
6 = PC800'96
7 = PC800'97
8 = PC800'98

Ref. No.	BLOCK NO. F-37 / DESCRIPTION	PC800 1989	1990	1994	1995	1996	1997	1998	AREA CODE	FRAME SERIAL NUMBER FROM	TO	QTY REQ	PART NUMBER
20	HOUSING, L. *R201*												
	(MAGNA RED)	..	..	..	..	..	7	8		.....	.....	1	88125-MR5-013ZF
21	VISOR, L. *NH251P*												
	(PACIFIC WHITE)	9	..	..	..	..	..	..		.....	.....	1	88126-MR5-003ZA
	VISOR, L. *R101CU*												
	(CANDY GLORY RED)	..	0	..	..	..	..	..		.....	.....	1	88126-MR5-003ZC
	VISOR, L. *NH1Z*												
	(BLACK-Z)	..	..	4	5	6	..	..		.....	.....	1	88126-MR5-003ZE
	VISOR, L. *R201*												
	(MAGNA RED)	..	..	..	..	..	7	8		.....	.....	1	88126-MR5-003ZF
22	BASE, R.	9	0	4	5	6	7	8		.....	.....	1	88131-MR5-003
23	BASE, L.	9	0	4	5	6	7	8		.....	.....	1	88141-MR5-003
24	ROPE COMP., WIRE	9	0	4	5	6	7	8		.....	.....	2	88151-MR5-003
25	BOLT, LOCK (6X7)	9	0	4	5	6	7	8		.....	.....	6	88152-MR5-003
26	WASHER, TOOTHED	9	0	4	5	6	7	8		.....	.....	6	88154-MR5-003
27	PLATE	9	0	4	5	6	7	8		.....	.....	2	88155-MR5-003

 © AMERICAN HONDA MOTOR CO. INC. 1997

WINDSCREEN

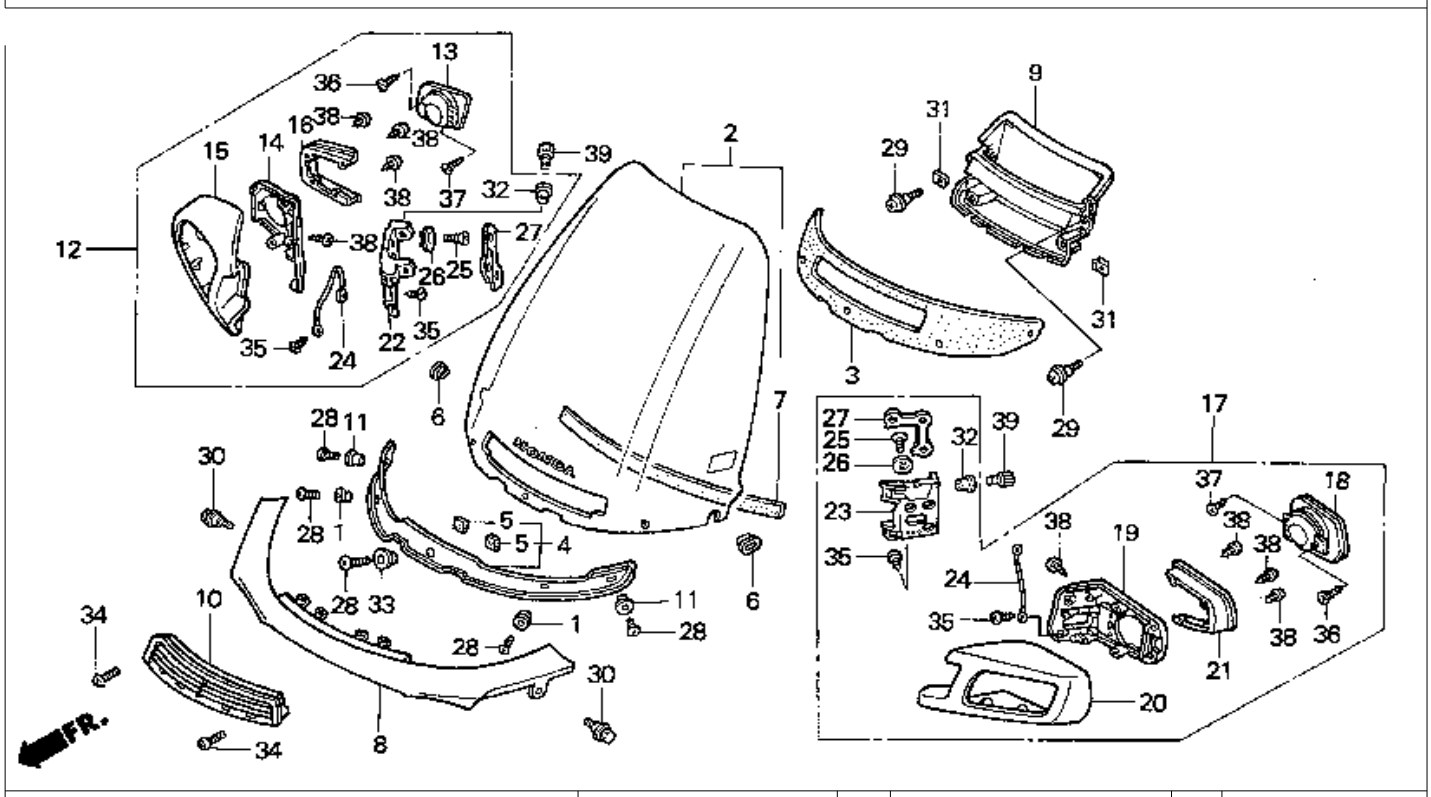

9 = PC800'89	6 = PC800'96							A				
0 = PC800'90	7 = PC800'97		PC800					R				
4 = PC800'94	8 = PC800'98							E			Q	
5 = PC800'95								A			T	
			1	1	1	1	1	1	1		Y	
			9	9	9	9	9	9	9	C		
			8	9	9	9	9	9	9	O	FRAME	R	
Ref.	BLOCK NO.	F-37	9	0	4	5	6	7	8	D	SERIAL NUMBER	E	
No.	DESCRIPTION		9	0	4	5	6	7	8	E	FROM TO	Q	PART NUMBER
28	SCREW, TORUS (6X20)		9	0	4	5	6	7	8		....	5	90001-GW2-000
29	SCREW, PAN (5X10)		9	0	4	5	6	7	8		....	2	90101-GK0-000
30	SCREW, PAN (6X14)		9	0	4	5	6	7	8		....	2	90106-MM4-000
31	NUT, FLOATING (4MM)		9	0	4	5	6	7	8		....	2	90305-SA0-000
32	WASHER, FR. COVER		9	0	4	5	6	7	8		....	4	90522-MF5-000
33	COLLAR, RR. FENDER		9	0	4	5	6	7	8		....	1	90563-KE6-890
34	SCREW, PAN (4X16)		9	0	4	5	6	7	8		....	2	93500-04016-0G
35	SCREW, TAPPING (4X8)		9	0	4	5	6	7	8		....	4	93903-24180
36	SCREW, TAPPING (4X10)		9	0	4	5	6	7	8		....	2	93903-24220
37	SCREW, TAPPING (4X12)		9	0	4	5	6	7	8		....	4	93903-24320
38	SCREW, TAPPING (4X16)		9	0	4	5	6	7	8		....	16	93903-24480
39	BOLT, SOCKET (6X12)		9	0	4	5	6	7	8		....	4	96600-06012-07
	BOLT, SOCKET (6X12)		9	0	4	5	6	7	8		....	4	96600-06012-07

 © AMERICAN HONDA MOTOR CO. INC. 1997

PLEASE READ

The following section referring to the cowl (fairing) isnt correct for instance

NOTE: REF NO. 4 This part of the fiche is wrong. In the 94/95 column it states the cowl set is the same as the magna red cowl set. **COWL SET, R. FR. (UPPER) *R201* (TYPE5) (WL) (MAGNA RED) this can't be so I have changed the description for the black cowl**

also the magna red cowl it states that the part number the 96, 97, 98, is **64204-MR5-A20ZA** yet if you check the color table grid A8 it states the cowl part number is **64204-MR5-A20ZF** for the 96 model

so be carefull when ordering these parts make sure you ask for the colour

FAIRING

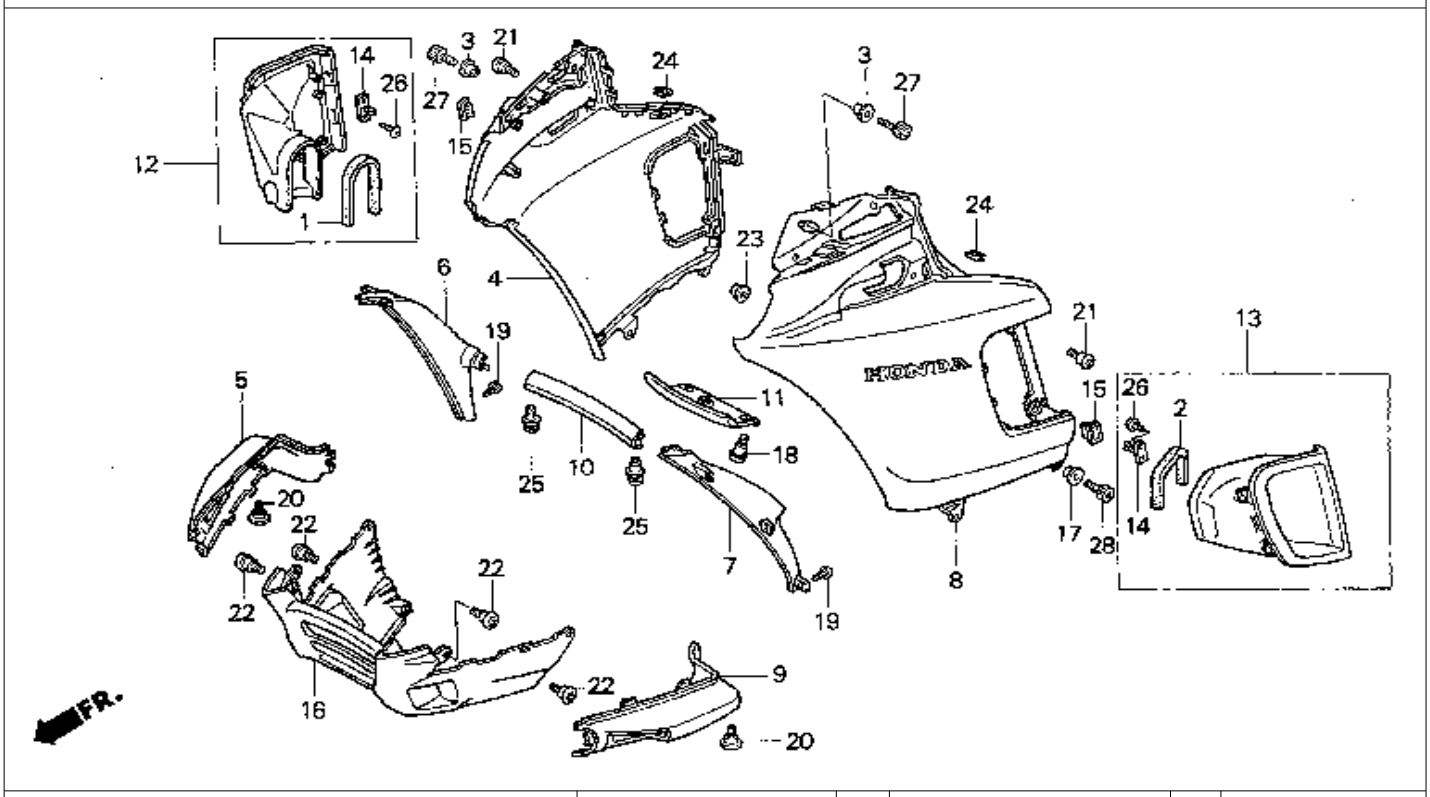

9 = PC800'89 6 = PC800'96
0 = PC800'90 7 = PC800'97
4 = PC800'94 8 = PC800'98
5 = PC800'95

Ref. No.	BLOCK NO. F-38 DESCRIPTION	PC800 1989	1990	1994	1995	1996	1997	1998	AREA CODE	FRAME SERIAL NUMBER FROM	TO	QTY REQ	PART NUMBER
1	RUBBER, R. AIR DUCT	9	0	4	5	6	7	8		.....	.....	1	19023-MR5-300
2	RUBBER, L. AIR DUCT	9	0	4	5	6	7	8		.....	.....	1	19024-MR5-300
3	COLLAR, FR. FENDER	9	0	4	5	6	7	8		.....	.....	2	61105-KM7-910
4	COWL SET, R. FR. (UPPER) *NH251P* (TYPE1)												
	(WL) (PACIFIC WHITE)	9	..	..	..	..	..	..		.....	.....	1	64204-MR5-000ZA
	COWL SET, R. FR. (UPPER) *R101CU* (TYPE3)												
	(WL) (CANDY GLORY RED)	..	0	..	..	..	..	..		.....	.....	1	64204-MR5-870ZB
	COWL SET, R. FR. *R101CU*												
	(CANDY GLORY RED)	..	0	..	..	..	..	..		.....	.....	1	64204-MR5-870ZG
	COWL SET, R. FR. (UPPER) *NH1Z* (TYPE5)												
	(WL) (BLACK-Z)	..	..	4	5	..	..	..		.....	.....	1	64204-MR5-800ZC
	COWL SET, R. FR. (UPPER) *R201* (TYPE6)												
	(WL) (MAGNA RED)	..	..	..	..	6	7	8		.....	.....	1	64204-MR5-A20ZA

 © AMERICAN HONDA MOTOR CO. INC. 1997

FAIRING

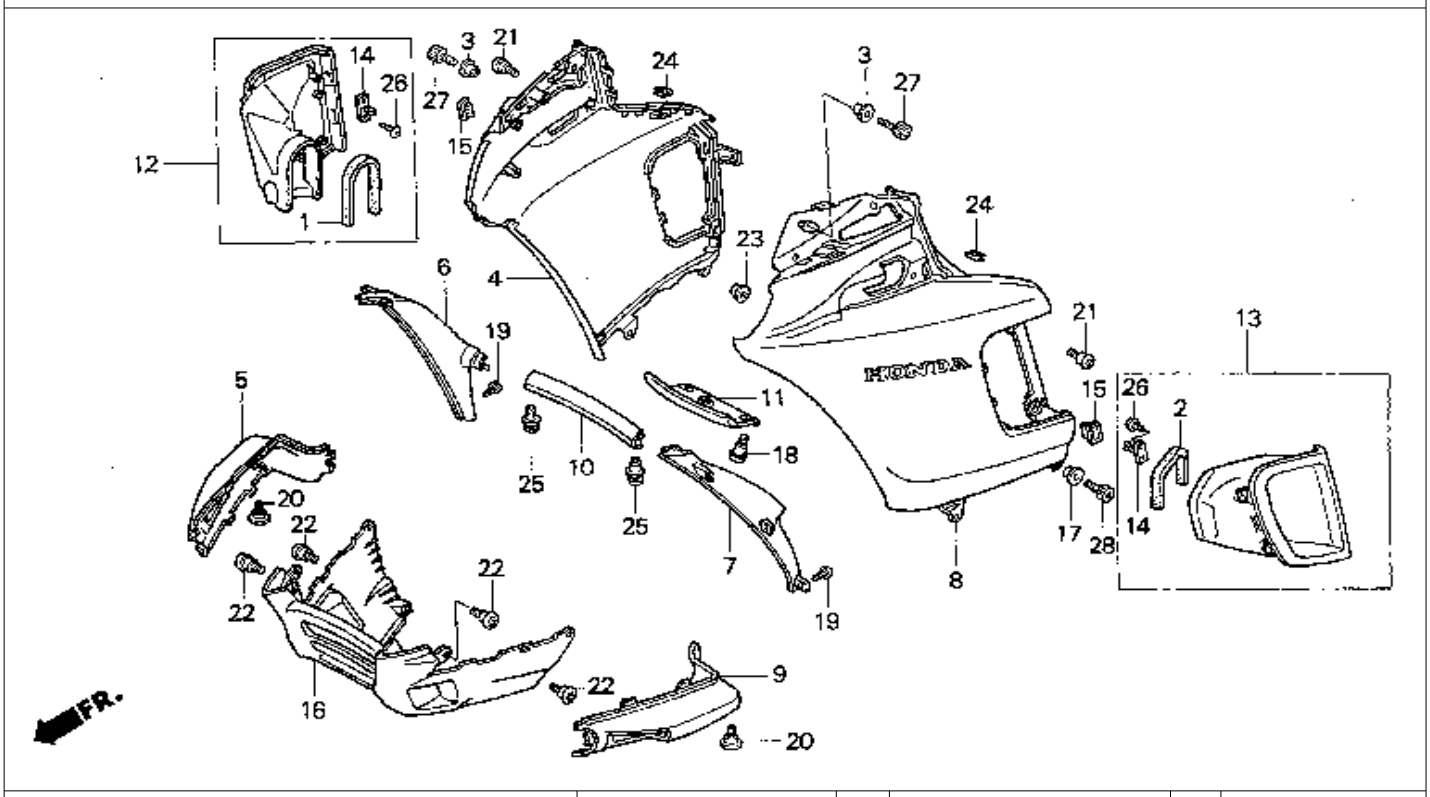

9 = PC800'89 6 = PC800'96
0 = PC800'90 7 = PC800'97
4 = PC800'94 8 = PC800'98
5 = PC800'95

Ref. No.	BLOCK NO. F-38 DESCRIPTION	PC800 1989	1990	1994	1995	1996	1997	1998	AREA CODE	FRAME SERIAL NUMBER FROM		TO	QTY REQ	PART NUMBER
5	PROTECTOR, R. FAIRING *NH253* (TYPE1) (OCEAN GRAY)	9	..	..	..	..	..	..		.....		.....	1	64205-MR5-000ZA
	PROTECTOR, R. FAIRING *NH292M* (TYPE3) (GRIFFIN GRAY)	..	0	4	5	..	..	..		.....		.....	1	64205-MR5-000ZC
	PROTECTOR, R. FAIRING *NH292M* (TYPE3) (GRIFFIN GRAY)	..	0	4	5	..	..	..		.....		.....	1	64205-MR5-000ZE
	PROTECTOR, R. FAIRING *NH197MU* (KARAKORUM GRAY)	..	..	..	..	6	..	..		.....		.....	1	64205-MR5-000ZF
	PROTECTOR, R. FAIRING *NH340R*	..	..	..	..	..	7	8		.....		.....	1	64205-MR5-Z30ZA
6	PANEL, R. (INNER) *NH251P* (PACIFIC WHITE)	9	..	..	..	..	..	..		.....		.....	1	64211-MR5-000ZA
	PANEL, R. (INNER) *R101CU* (CANDY GLORY RED)	..	0	..	..	..	..	..		.....		.....	1	64211-MR5-000ZC
	PANEL, R. (INNER) *NH1Z* (BLACK-Z)	..	..	4	5	..	..	..		.....		.....	1	64211-MR5-000ZE
	PANEL, R. (INNER) *R201* (MAGNA RED)	..	..	..	..	6	..	..		.....		.....	1	64211-MR5-000ZF
	PANEL, R. (INNER) *NH1* (BLACK)	..	..	..	..	..	7	8		.....		.....	1	64211-MR5-A30ZA

 © AMERICAN HONDA MOTOR CO. INC. 1997

FAIRING

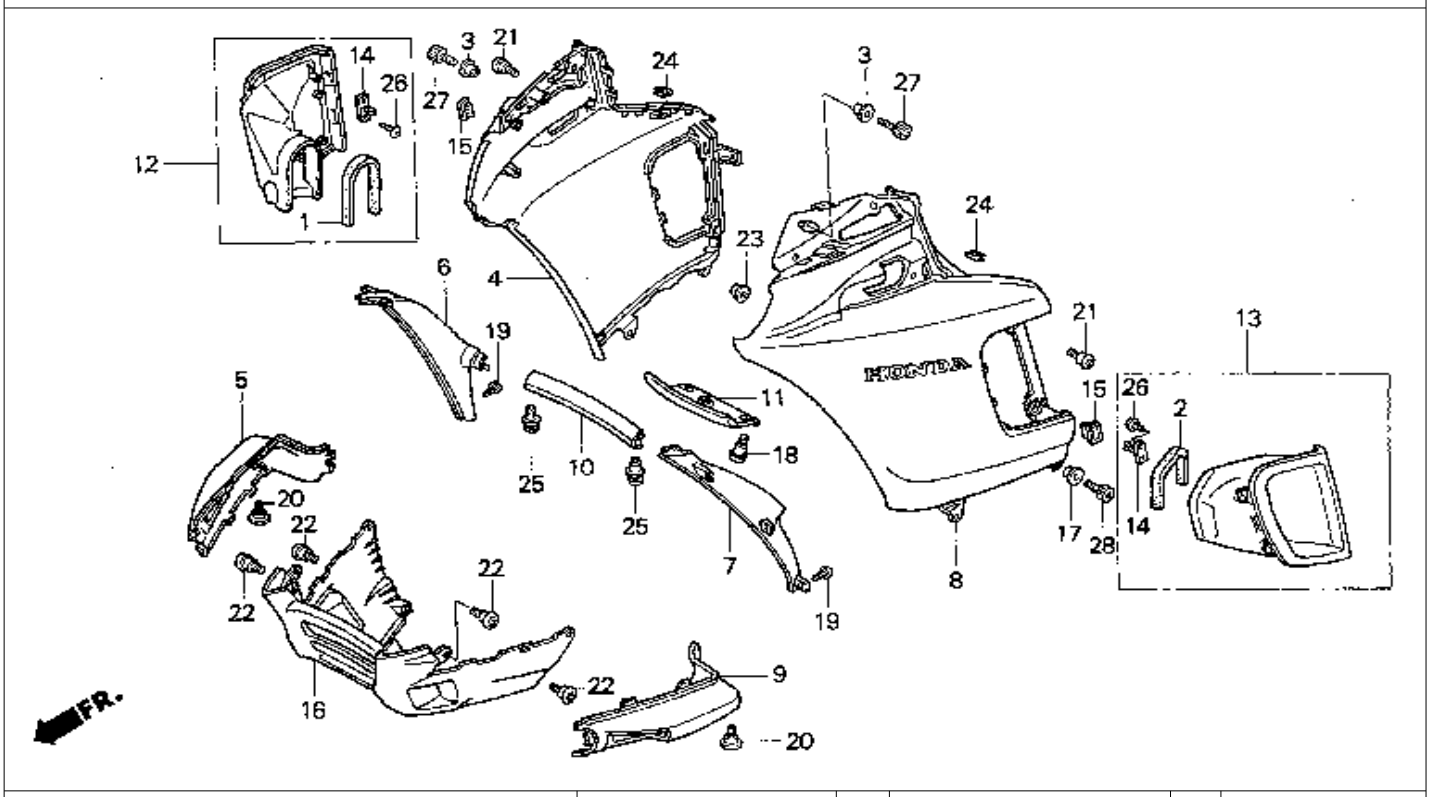

9 = PC800'89 6 = PC800'96
0 = PC800'90 7 = PC800'97
4 = PC800'94 8 = PC800'98
5 = PC800'95

Ref. No.	BLOCK NO. DESCRIPTION	PC800 1989 9	1990 0	1994 4	1995 5	1996 6	1997 7	1998 8	AREA CODE	FRAME SERIAL NUMBER FROM		TO	QTY REQ	PART NUMBER
7	PANEL, L. (INNER) *NH251P* (PACIFIC WHITE)	9	..	..	..	..	..	..		.....		.....	1	64212-MR5-000ZA
	PANEL, L. (INNER) *R101CU* (CANDY GLORY RED)	..	0	..	..	..	..	..		.....		.....	1	64212-MR5-000ZC
	PANEL, L. (INNER) *NH1Z* (BLACK-Z)	..	..	4	5	..	..	..		.....		.....	1	64212-MR5-000ZE
	PANEL, L. (INNER) *R201* (MAGNA RED)	..	..	..	..	6	..	..		.....		.....	1	64212-MR5-000ZF
	PANEL, L. (INNER) *NH1* (BLACK)	..	..	..	..	..	7	8		.....		.....	1	64212-MR5-A30ZA
8	COWL SET, L. FR. (UPPER) *NH251P* (TYPE1) (WL) (PACIFIC WHITE)	9	..	..	..	..	..	..		.....		.....	1	64214-MR5-000ZA
	COWL SET, L. FR. (UPPER) *R101CU* (TYPE1) (WL) (CANDY GLORY RED)	..	0	..	..	..	..	..		.....		.....	1	64214-MR5-000ZB
	COWL SET, L. FR. (UPPER) *R101CU* (TYPE3) (WL) (CANDY GLORY RED)	..	0	..	..	..	..	..		.....		.....	1	64214-MR5-870ZG

 © AMERICAN HONDA MOTOR CO. INC. 1997

FAIRING

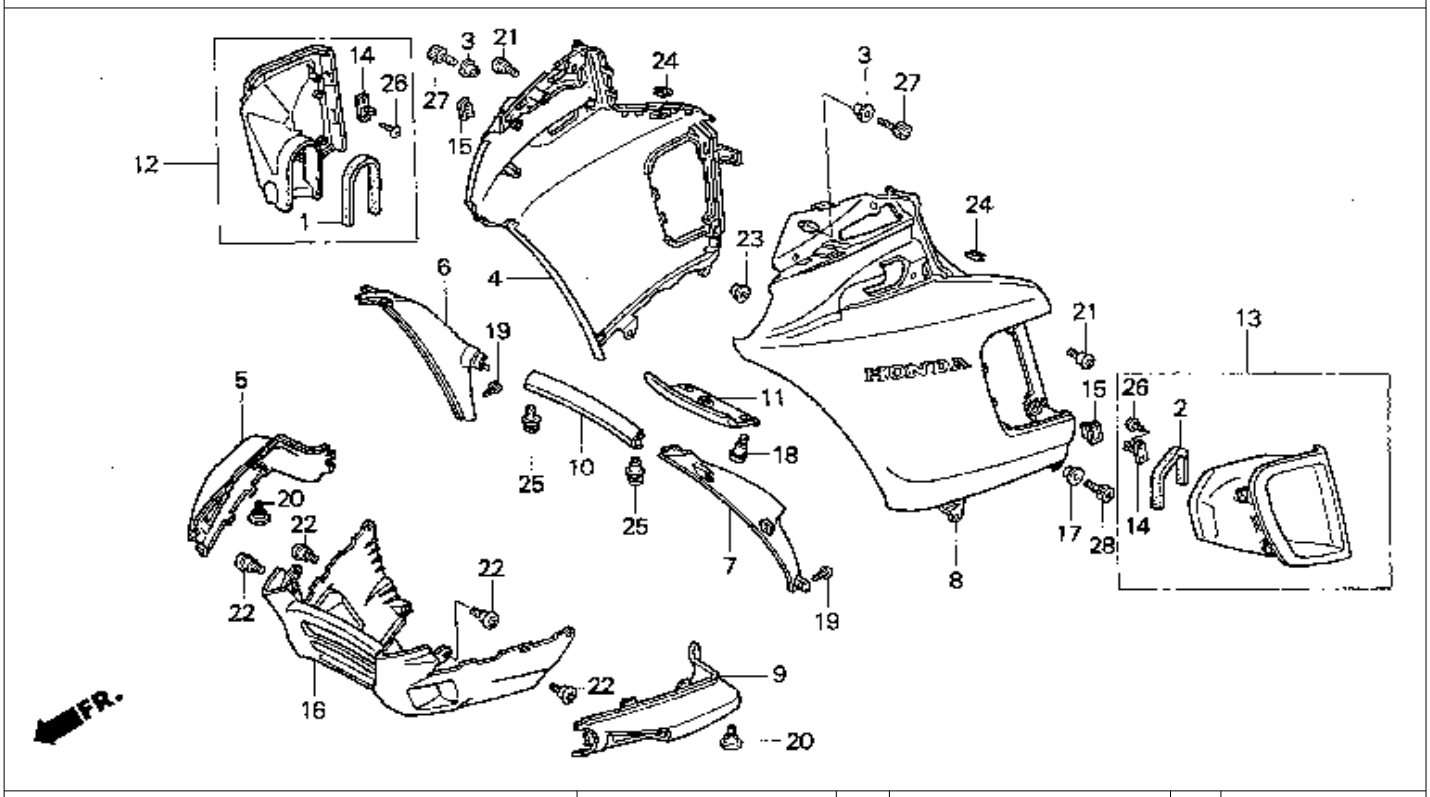

9 = PC800'89 6 = PC800'96
0 = PC800'90 7 = PC800'97
4 = PC800'94 8 = PC800'98
5 = PC800'95

Ref. No.	BLOCK NO. F-38 DESCRIPTION	1989	1990	1994	1995	1996	1997	1998	AREA CODE	FRAME SERIAL NUMBER FROM	TO	QTY REQ	PART NUMBER
8	COWL SET, L. FR. (UPPER) *NH1Z* (TYPE5) (WL) (BLACK-Z)	..	..	4	5	..	..	..		.....	.....	1	64214-MR5-800ZC
	COWL SET, L. FR. (UPPER) *R201* (TYPE6) (WL) (MAGNA RED)	..	..	..	..	6	7	8		.....	.....	1	64214-MR5-A20ZA
9	PROTECTOR, L. FAIRING *NH253* (TYPE1) (OCEAN GRAY)	9	..	..	..	..	..	..		.....	.....	1	64215-MR5-000ZA
	PROTECTOR, L. FAIRING *NH292M* (TYPE3) (GRIFFIN GRAY)	..	0	4	5	..	..	..		.....	.....	1	64215-MR5-000ZC
	PROTECTOR, L. FAIRING *NH292M* (TYPE3) (GRIFFIN GRAY)	..	0	4	5	..	..	..		.....	.....	1	64215-MR5-000ZE
	PROTECTOR, L. FAIRING *NH197MU* (KARAKORUM GRAY)	..	..	..	..	6	..	..		.....	.....	1	64215-MR5-000ZF
	PROTECTOR, L. FAIRING *NH340R*	..	..	..	..	..	7	8		.....	.....	1	64215-MR5-A30ZA

 © AMERICAN HONDA MOTOR CO. INC. 1997

FAIRING

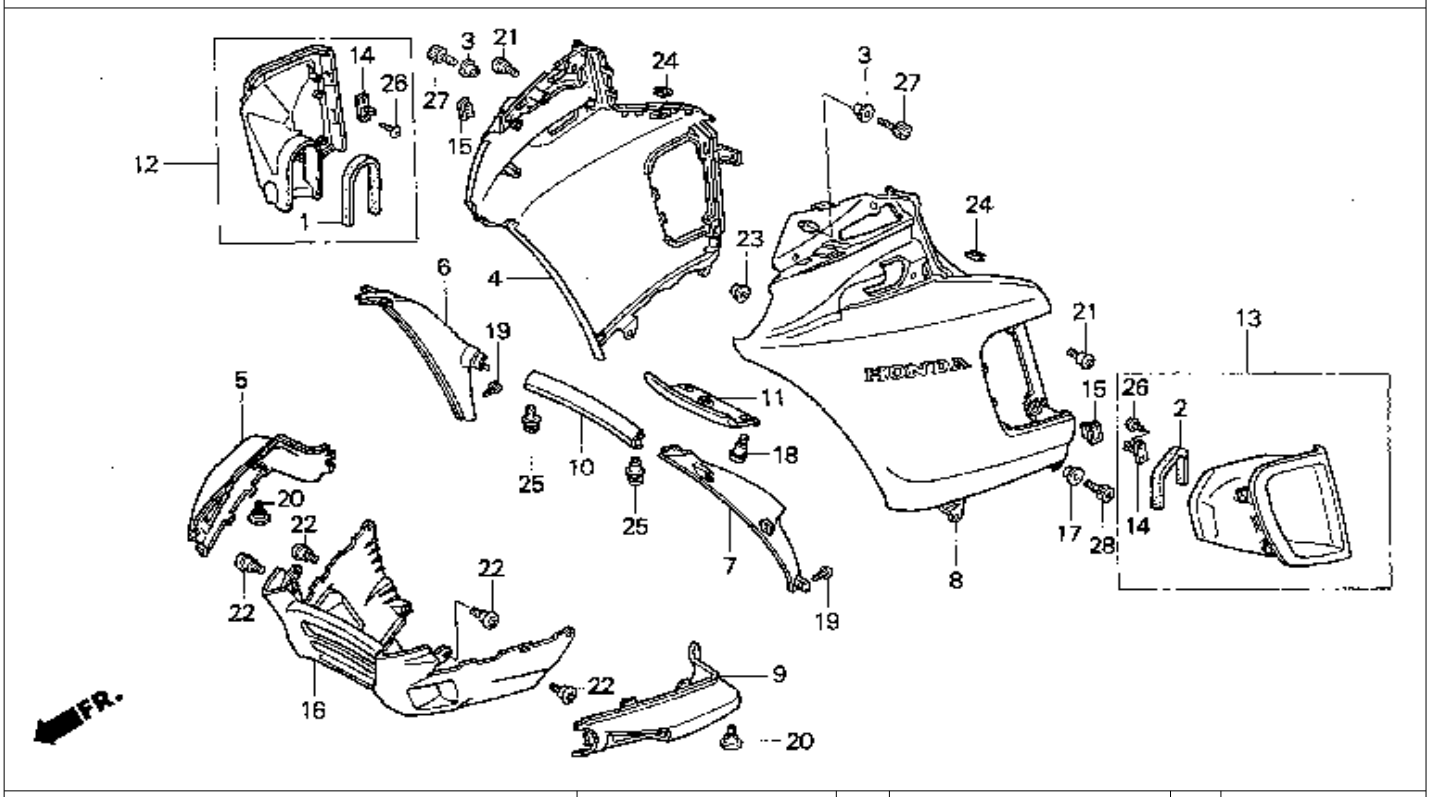

9 = PC800'89 6 = PC800'96
0 = PC800'90 7 = PC800'97
4 = PC800'94 8 = PC800'98
5 = PC800'95

Ref. No.	BLOCK NO. F-38 / DESCRIPTION	PC800 1989	1990	1994	1995	1996	1997	1998	AREA CODE	FRAME SERIAL NUMBER FROM		TO	QTY REQ	PART NUMBER
10	PANEL, FR. CENTER *NH251P* (PACIFIC WHITE)	9	..	..	..	..	..	..		.....		.....	1	64217-MR5-000ZA
	PANEL, FR. CENTER *R101CU* (CANDY GLORY RED)	..	0	..	..	..	..	..		.....		.....	1	64217-MR5-000ZC
	PANEL, FR. CENTER *NHIZ* (BLACK-Z)	..	..	4	5	..	..	..		.....		.....	1	64217-MR5-000ZE
	PANEL, FR. CENTER *R201* (MAGNA RED)	..	..	..	..	6	..	..		.....		.....	1	64217-MR5-000ZF
	PANEL, FR. CENTER *NH1* (BLACK)	..	..	..	..	..	7	8		.....		.....	1	64217-MR5-A30ZA
11	LID, FR. MAINTENANCE *NH251P* (PACIFIC WHITE)	9	..	..	..	..	..	..		.....		.....	1	64218-MR5-000ZA
	LID, FR. MAINTENANCE *R101CU* (CANDY GLORY RED)	..	0	..	..	..	..	..		.....		.....	1	64218-MR5-000ZC
	LID, FR. MAINTENANCE *NH1Z* (BLACK-Z)	..	..	4	5	..	..	..		.....		.....	1	64218-MR5-000ZE
	LID, FR. MAINTENANCE *R201* (MAGNA RED)	..	..	..	..	6	7	8		.....		.....	1	64218-MR5-000ZF

 © AMERICAN HONDA MOTOR CO. INC. 1997

FAIRING

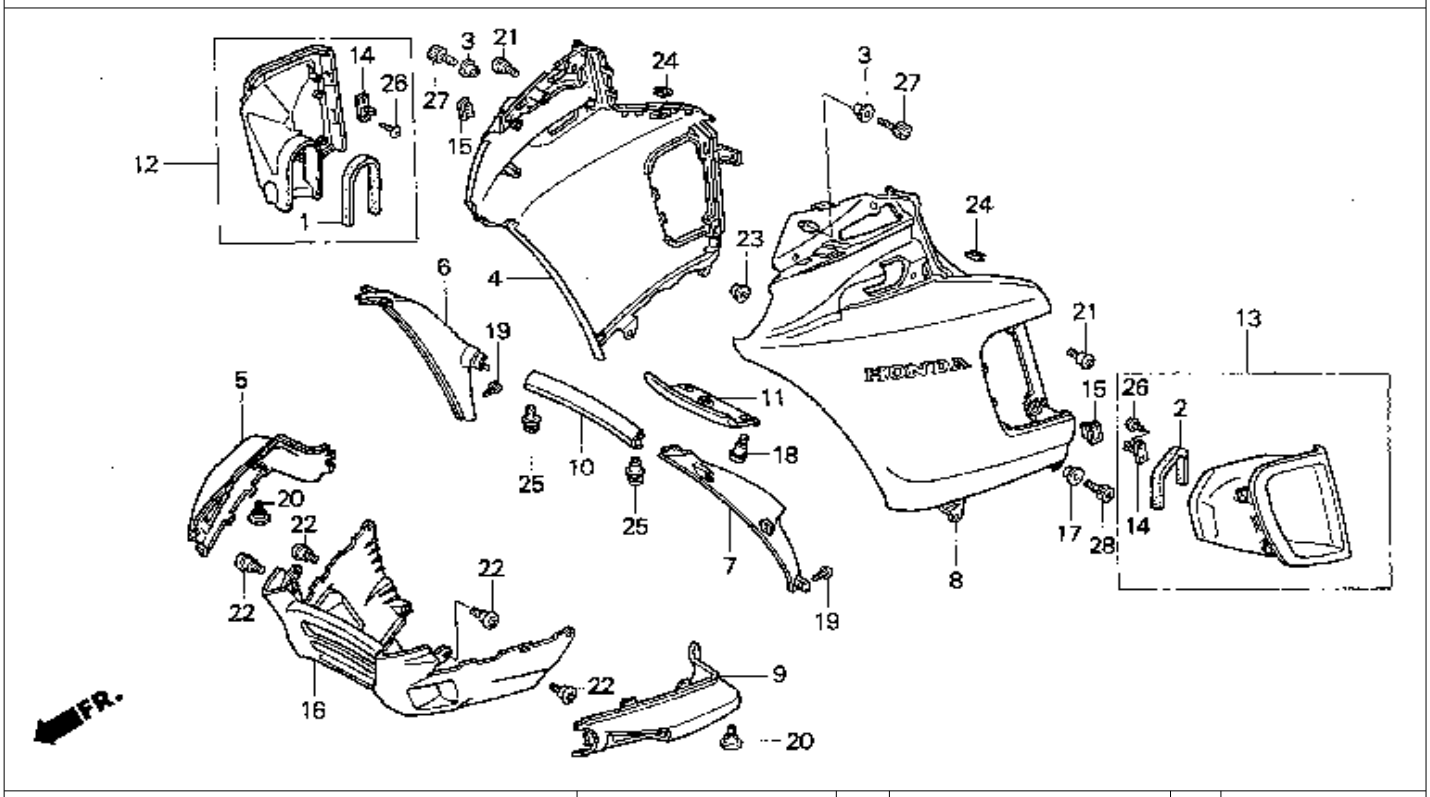

9 = PC800'89 6 = PC800'96
0 = PC800'90 7 = PC800'97
4 = PC800'94 8 = PC800'98
5 = PC800'95

Ref. No.	BLOCK NO. F-38 DESCRIPTION	PC800 1989 9	1990 0	1994 4	1995 5	1996 6	1997 7	1998 8	AREA CODE	FRAME SERIAL NUMBER FROM	TO	QTY REQ	PART NUMBER
12	LID ASSY., R. MAINTENANCE *NH251P* (PACIFIC WHITE)	9	..	..	..	..	..	..		.....	.....	1	64280-MR5-000ZA
	LID ASSY., R. MAINTENANCE *NH251P* (PACIFIC WHITE)	9	..	..	..	..	..	..		.....	.....	1	64280-MR5-010ZA
	LID ASSY., R. MAINTENANCE *R101CU* (CANDY GLORY RED)	..	0	..	..	..	..	..		.....	.....	1	64280-MR5-010ZC
	LID ASSY., R. MAINTENANCE *NH1Z* (BLACK-Z)	..	..	4	5	..	..	..		.....	.....	1	64280-MR5-010ZE
	LID ASSY., R. MAINTENANCE *R201* (MAGNA RED)	..	..	..	..	6	7	8		.....	.....	1	64280-MR5-010ZF
13	LID ASSY., L. MAINTENANCE *NH251P* (PACIFIC WHITE)	9	..	..	..	..	..	..		.....	.....	1	64290-MR5-000ZA
	LID ASSY., L. MAINTENANCE *NH251P* (PACIFIC WHITE)	9	..	..	..	..	..	..		.....	.....	1	64290-MR5-010ZA
	LID ASSY., L. MAINTENANCE *R101CU* (CANDY GLORY RED)	..	0	..	..	..	..	..		.....	.....	1	64290-MR5-010ZC
	LID ASSY., L. MAINTENANCE *NH1Z* (BLACK-Z)	..	..	4	5	..	..	..		.....	.....	1	64290-MR5-010ZE
	LID ASSY., L. MAINTENANCE *R201* (MAGNA RED)	..	..	..	..	6	7	8		.....	.....	1	64290-MR5-010ZF

 © AMERICAN HONDA MOTOR CO. INC. 1997

FAIRING

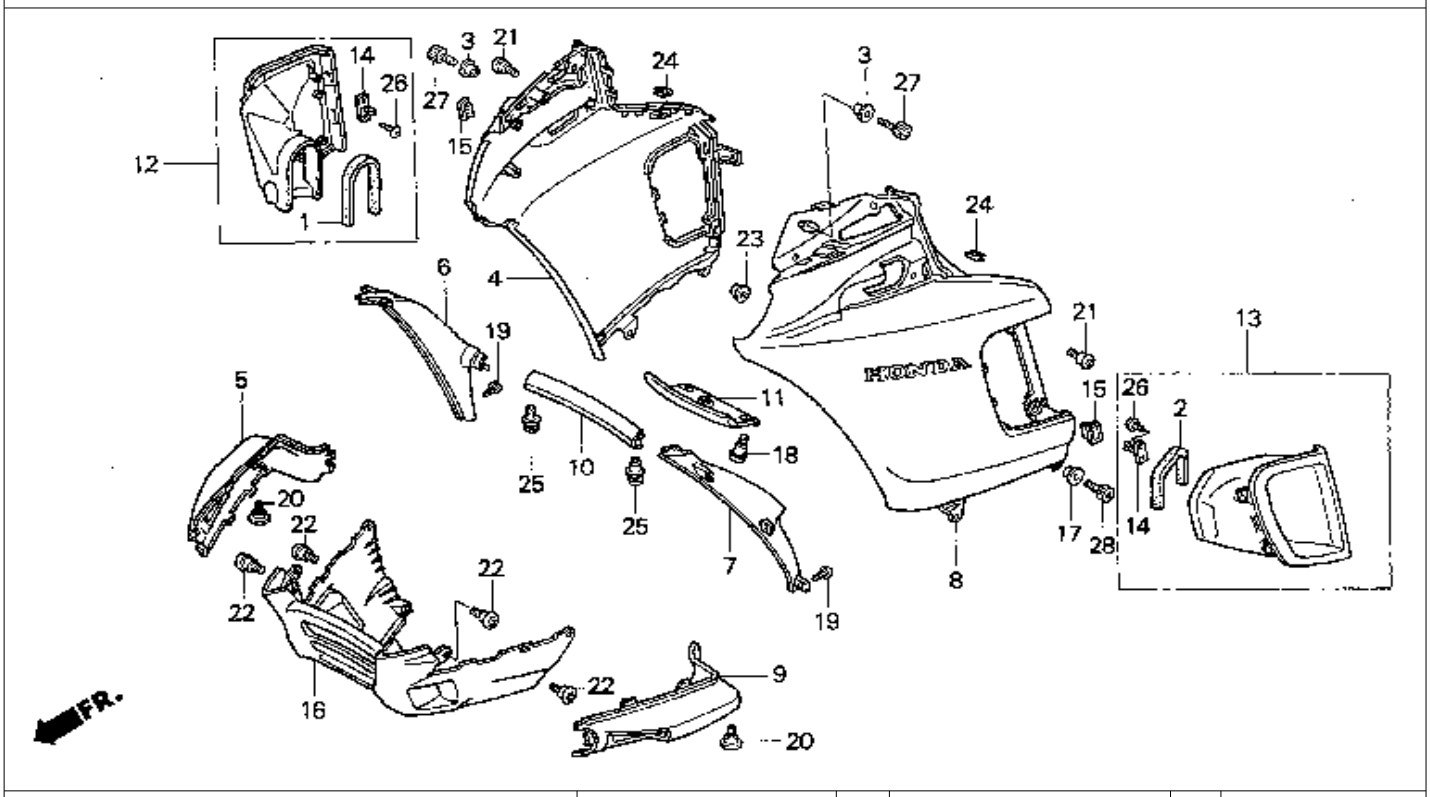

9 = PC800'89 6 = PC800'96
0 = PC800'90 7 = PC800'97
4 = PC800'94 8 = PC800'98
5 = PC800'95

Ref. No.	BLOCK NO. F-38 / DESCRIPTION	1989	1990	1994	1995	1996	1997	1998	AREA CODE	FRAME SERIAL FROM		FRAME NUMBER TO	QTY REQ	PART NUMBER
14	STRIKER, MAINTENANCE LID	9	..	..	..	..	..	..		.....		.....	4	64296-MR5-003
	STRIKER, MAINTENANCE LID	..	0	4	5	6	7	8		.....		.....	4	64296-MR5-871
15	LATCH, SIDE COVER	9	0	4	5	6	7	8		.....		.....	4	64297-MR5-003
16	COWL, FR. (LOWER) *NH253M* (TYPE1)									.....		.....		
	(OCEAN GRAY)	9	..	..	..	..	..	..		.....		.....	1	64300-MR5-000ZA
	COWL, FR. (LOWER) *NH292M* (TYPE3)									.....		.....		
	(GRIFFIN GRAY)	..	0	4	5	..	..	..		.....		.....	1	64300-MR5-000ZC
	COWL, FR. (LOWER) *NH292M*									.....		.....		
	(GRIFFIN GRAY)	..	0	4	5	..	..	..		.....		.....	1	64300-MR5-000ZE
	COWL, FR. (LOWER) *NH197MU*									.....		.....		
	(KARAKORUM GRAY)	..	..	..	..	6	..	..		.....		.....	1	64300-MR5-000ZF
	COWL, FR. (LOWER) *NH340R*	..	..	..	..	..	7	8		.....		.....	1	64300-MR5-A30ZA
17	COLLAR, AIR CLEANER	9	0	4	5	6	7	8		.....		.....	2	80109-KG7-000
18	SCREW, PAN (5X10)	9	0	4	5	6	7	8		.....		.....	3	90101-GK0-000
19	SCREW, TAPPING (4X12)	9	0	4	5	6	7	8		.....		.....	6	90101-SA4-000
	SCREW, TAPPING (4X16)	9	0	4	5	6	7	8		.....		.....	6	93913-14280

 © AMERICAN HONDA MOTOR CO. INC. 1997

FAIRING

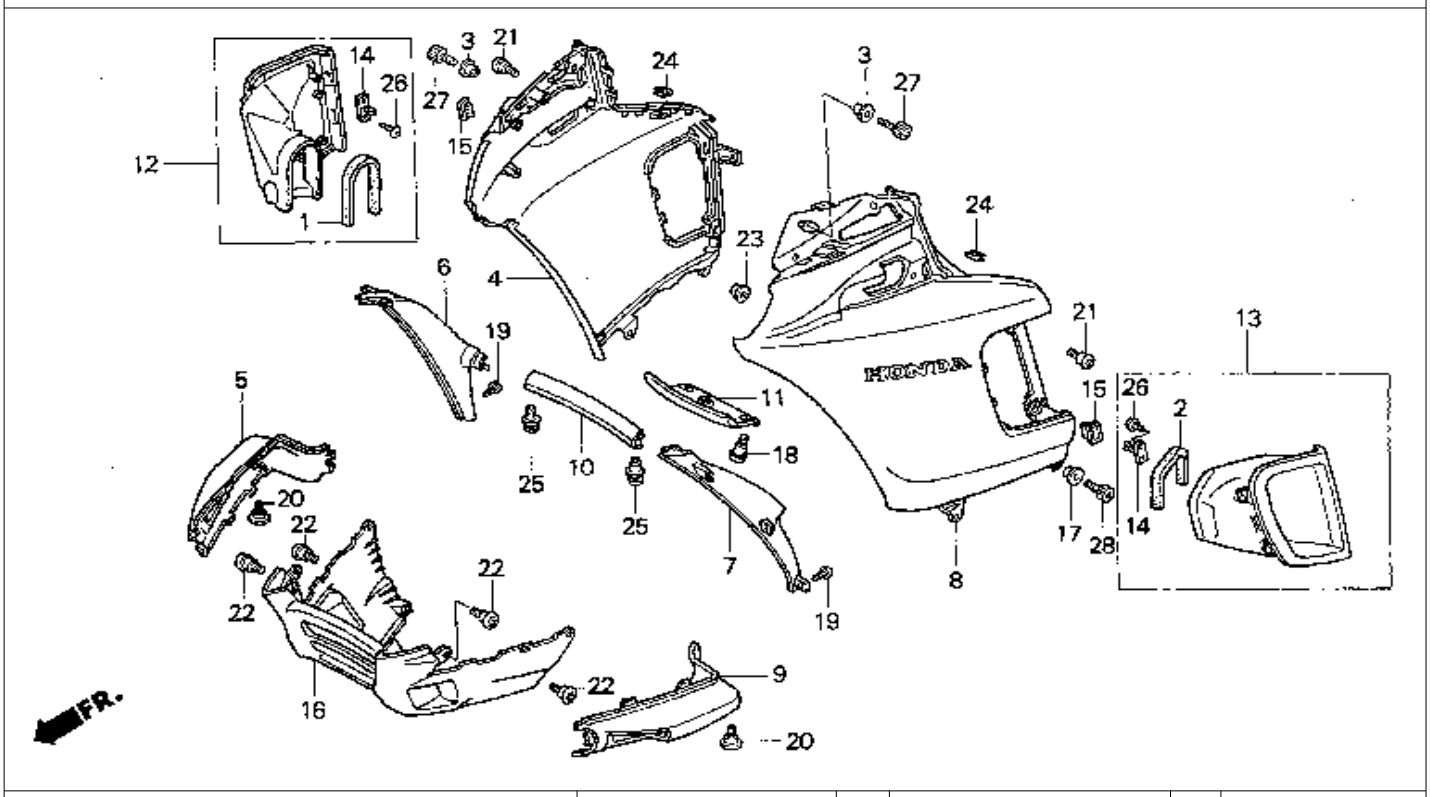

9 = PC800'89	6 = PC800'96								A				
0 = PC800'90	7 = PC800'97		PC800						R				
4 = PC800'94	8 = PC800'98								E			Q	
5 = PC800'95									A			T	
			1	1	1	1	1	1				Y	
			9	9	9	9	9	9	C				
			8	9	9	9	9	9	O	FRAME		R	
Ref.	BLOCK NO.	F-38	9	0	4	5	6	7	8	D	SERIAL	NUMBER	E	
No.	DESCRIPTION		9	0	4	5	6	7	8	E	FROM	TO	Q	PART NUMBER
20	SCREW, PAN (6X11)		9	0	4	5	6	7	8		.....	.....	2	90106-KY2-701
21	SCREW, PAN (6X14)		9	0	4	5	6	7	8		.....	.....	2	90106-MM4-000
22	SCREW, PAN (6X14)		9	0	4	5	6	7	8		.....	.....	4	90113-MM5-000
23	NUT, INSERT (4X0.7)		9	0	4	5	6	7	8		.....	.....	4	90315-MJ1-000
24	NUT, SPRING (5MM)		9	0	4	5	6	7	8		.....	.....	2	90320-GC3-000
25	RIVET, SCREW		9	0	4	5	6	7	8		.....	.....	2	90658-KM1-003
26	SCREW, TAPPING (3X8)		9	0	4	5	6	7	8		.....	.....	8	93903-22120
27	BOLT, SOCKET (6X16)		9	..	..	..	..	..	..	A	.....	KM001538	2	96600-06016-00
			9	..	..	..	..	..	..	AC	.....	KM001638	2	96600-06016-00
	BOLT, SOCKET (6X16)		9	..	..	..	..	..	..	A	KM001539	.....	2	96600-06016-08
			9	..	..	..	..	..	..	AC	KM001639	.....	2	96600-06016-08
			..	0	4	5	6	7	8		.....	.....	2	96600-06016-08
	BOLT, SOCKET (6X16)		9	..	..	..	..	..	..	A	KM001539	.....	2	96700-06016-08
			9	..	..	..	..	..	..	AC	KM001639	.....	2	96700-06016-08
			..	0	4	5	6	7	8		.....	.....	2	96700-06016-08
28	BOLT, SOCKET (6X16)		9	0	4	5	6	7	8		.....	.....	2	96600-06016-08
	BOLT, SOCKET (6X16)		9	0	4	5	6	7	8		.....	.....	2	96600-06016-08

 © AMERICAN HONDA MOTOR CO. INC. 1997

COWL STAY

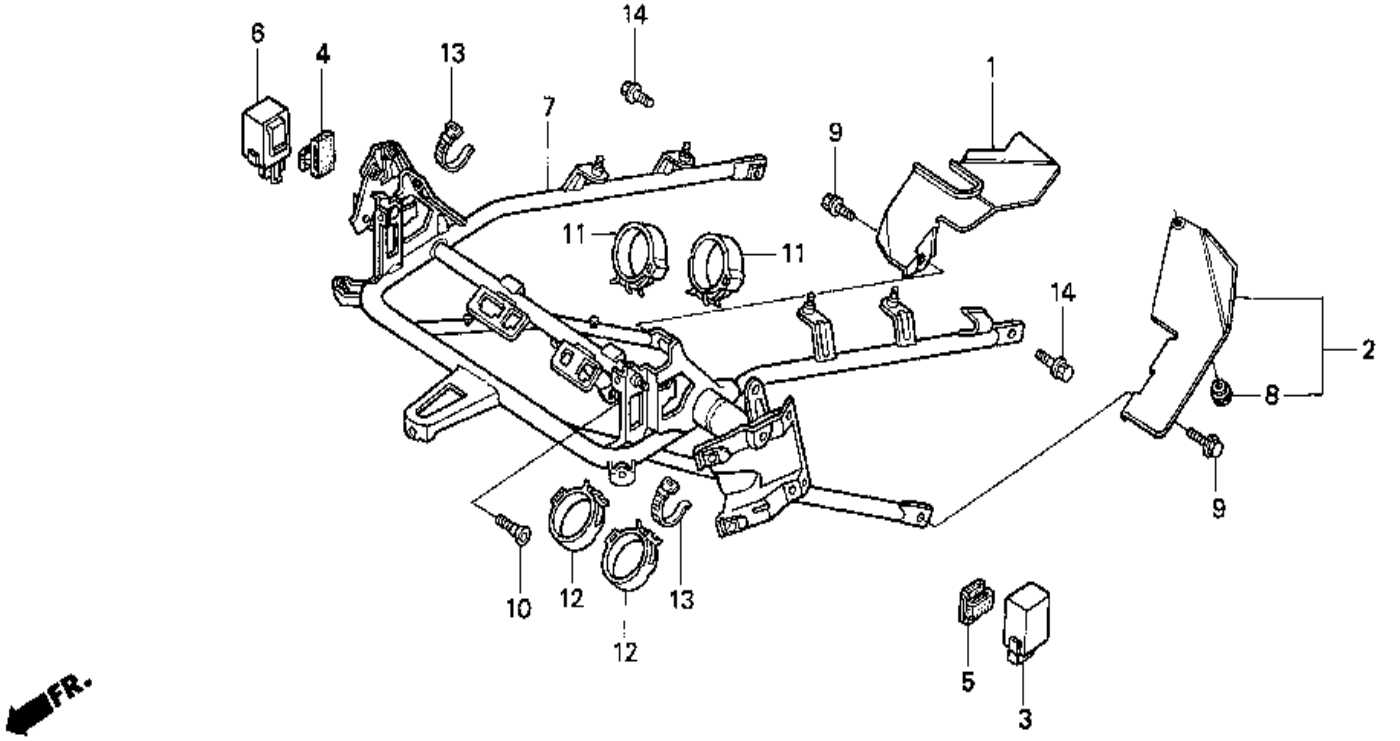

9 = PC800'89 6 = PC800'96
0 = PC800'90 7 = PC800'97
4 = PC800'94 8 = PC800'98
5 = PC800'95

Ref. No.	BLOCK NO. F-39 DESCRIPTION	1989	1990	1994	1995	1996	1997	1998	AREA CODE	FRAME SERIAL NUMBER FROM	TO	QTY REQ	PART NUMBER
1	PLATE, R. AIR GUARD	9	0	4	5	6	7	8		.....	.....	1	19633-MR5-000
2	PLATE, L. AIR GUARD	9	0	4	5	6	7	8		.....	.....	1	19634-MR5-000
3	RELAY COMP., TURN SIGNAL (TATEISHI)	9	0	4	5	6	7	8		.....	.....	1	38301-MF8-771
4	SUSPENSION, TURN SIGNAL RELAY	9	0	4	5	6	..	..		.....	.....	1	38306-ME9-771
5	SUSPENSION, TURN SIGNAL RELAY	9	0	4	5	6	7	8		.....	.....	1	38306-MF5-770
6	RELAY COMP., POSITION	9	0	4	5	6	..	..		.....	.....	1	38601-MB3-671
7	STAY COMP., COWL	9	0	4	5	6	..	..		.....	.....	1	64510-MR5-000
	STAY COMP., COWL	..	..	..	..	..	7	8		.....	.....	1	64510-MR5-A30
8	RUBBER, NUMBER PLATE BRACKET CUSHION	9	0	4	5	6	7	8		.....	.....	1	84702-MF2-670
9	BOLT, FLANGE (6X12)	9	0	4	5	6	7	8		.....	.....	2	90118-958-003
10	SCREW, FLAT SOCKET	9	0	4	5	6	7	8		.....	.....	1	90125-MR5-000
11	CLIP, CABLE (25MM)	9	..	..	..	..	..	8		.....	.....	2	90690-GHB-671
	CLIP, CABLE (20MM)	..	0	4	5	6	7	..		.....	.....	2	90690-GHB-661
12	CLIP, CABLE (25MM)	9	0	4	5	6	7	8		.....	.....	2	90690-GHB-671
13	BAND B3, CABLE HARNESS	9	..	..	..	..	..	..		.....	.....	2	95014-62300
14	BOLT, FLANGE (8X16)	9	0	4	5	6	7	8		.....	.....	2	95701-08016-08

 © AMERICAN HONDA MOTOR CO. INC. 1997

TRUNK LID

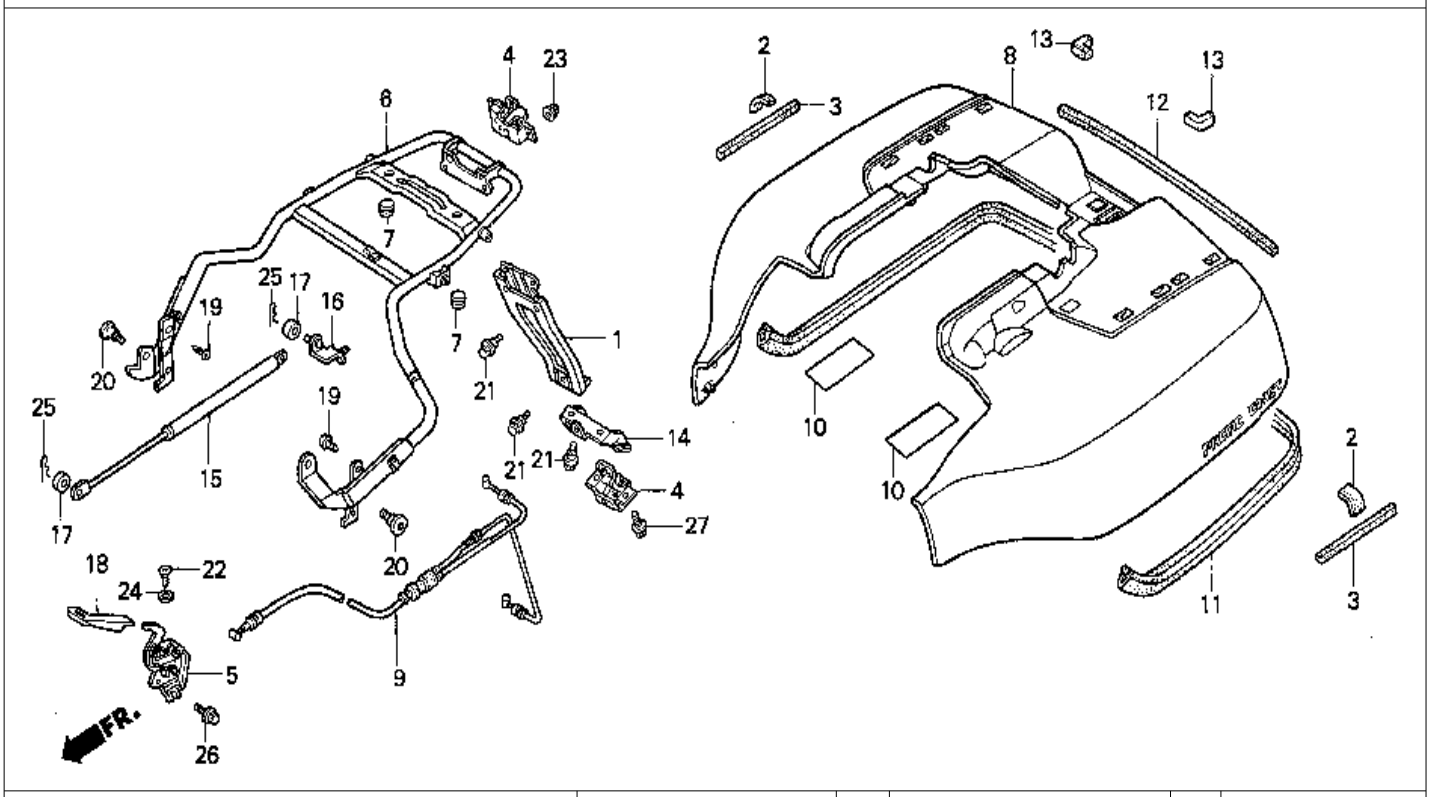

9 = PC800'89 6 = PC800'96
0 = PC800'90 7 = PC800'97
4 = PC800'94 8 = PC800'98
5 = PC800'95

Ref. No.	BLOCK NO. F-40 / DESCRIPTION	1998 9	1990 0	1994 4	1995 5	1996 6	1997 7	1998 8	AREA CODE	FRAME SERIAL FROM	FRAME NUMBER TO	QTY REQ	PART NUMBER
1	STAY, RR. TRUNK SETTING	9	0	4	5	6	7	8		.....	.....	1	50245-MR5-000
2	RUBBER, BATTERY (A)	9	..	..	..	..	..	..	A	.....	KM000866	2	50384-045-670
3	RUBBER	9	..	..	..	..	..	..	A	.....	KM000866	2	53209-GR2-770
		9	..	..	..	..	..	..	AC	.....	KM000075	2	53209-GR2-770
4	LOCK ASSY., TRUNK GATE	9	0	4	5	6	7	8		.....	.....	2	74800-MR5-003
5	OPENER ASSY., TRUNK	9	0	4	5	6	7	8		.....	.....	1	74882-MR5-000
6	PIPE, TRUNK LID OPENER	9	0	4	5	6	7	8		.....	.....	1	77250-MR5-000
	PIPE, TRUNK LID OPENER	9	0	4	5	6	7	8		.....	.....	1	77250-MR5-830
7	RUBBER, ADJUSTER CUSHION	9	0	4	5	6	7	8		.....	.....	2	77258-MR5-000
8	LID SET., TRUNK *NH251P* (TYPE1) (WL)												
	(PACIFIC WHITE)	9	..	..	..	..	..	..		.....	.....	1	81200-MR5-000ZA
	LID SET., TRUNK *NH251P* (TYPE1) (WL)												
	(PACIFIC WHITE)	9	..	..	..	..	..	..		.....	.....	1	81200-MR5-870ZA
	LID SET., TRUNK (TYPE5) (WL)	9	..	..	..	..	..	..		.....	.....	1	81200-MR5-870ZG

 © AMERICAN HONDA MOTOR CO. INC. 1997

TRUNK LID

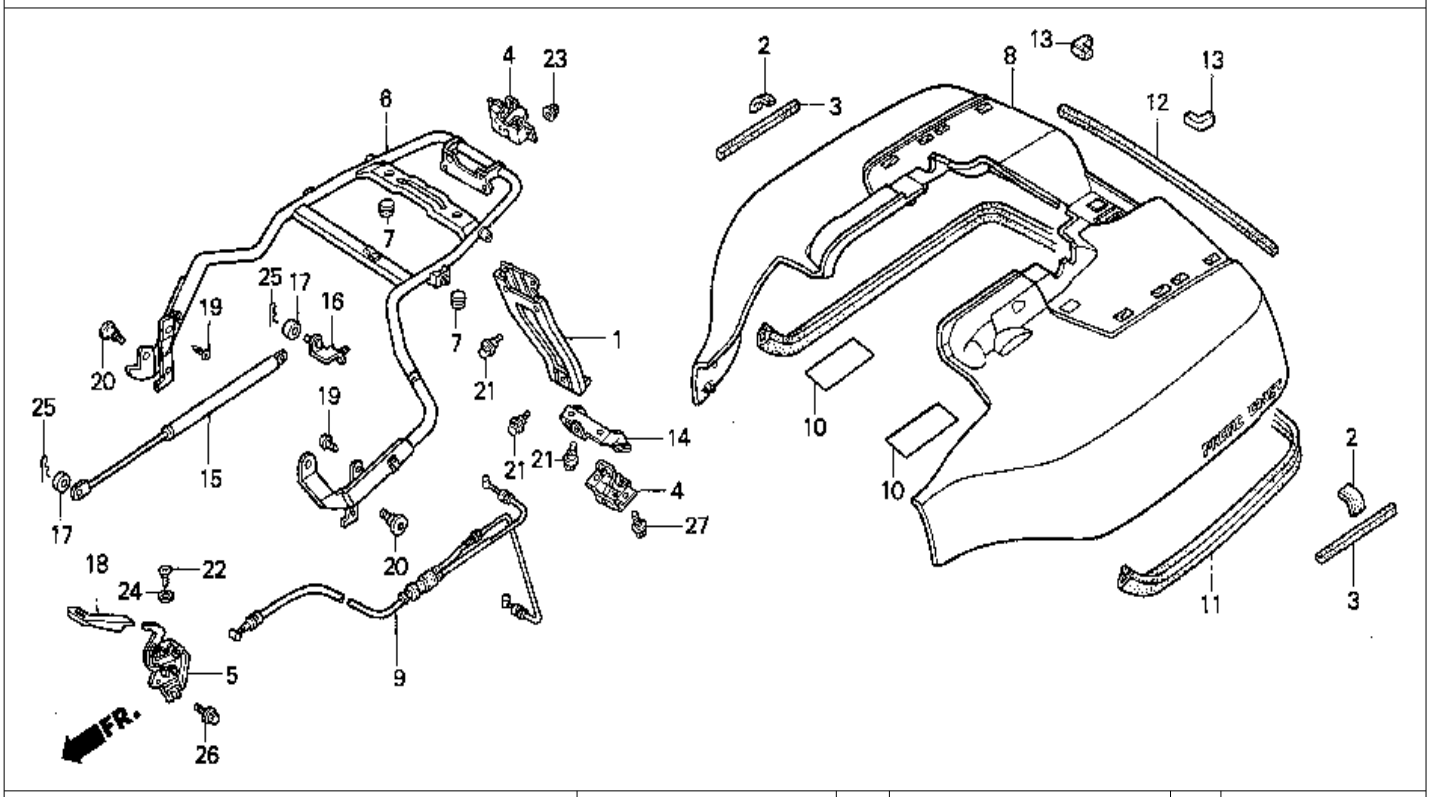

9 = PC800'89 6 = PC800'96
0 = PC800'90 7 = PC800'97
4 = PC800'94 8 = PC800'98
5 = PC800'95

Ref. No.	BLOCK NO. F-40 DESCRIPTION	PC800 1989	1990	1994	1995	1996	1997	1998	AREA CODE	FRAME SERIAL NUMBER FROM	TO	QTY REQ	PART NUMBER
8	LID SET., TRUNK *R101CU* (TYPE3) (WL) (CANDY GLORY RED)	..	0	..	..	..	..	..		.....	.....	1	81200-MR5-870ZC
	LID SET., TRUNK *R101CU* (TYPE3) (WL) (CANDY GLORY RED)	..	0	..	..	..	..	..		.....	.....	1	81200-MR5-870ZJ
	LID SET., TRUNK *NH1Z* (TYPE5) (WL) (BLACK-Z)	..	..	4	5	..	..	..		.....	.....	1	81200-MR5-700ZC
	LID SET., TRUNK *R201* (TYPE6) (WL) (MAGNA RED)	..	..	..	..	6	7	8		.....	.....	1	81200-MR5-A20ZA
9	CABLE COMP., TRUNK OPENER	9	0	4	5	6	7	8		.....	.....	1	81225-MR5-000
10	TAPE, PROTECTOR	9	0	4	5	6	7	8		.....	.....	2	81229-MR5-000
11	RUBBER, SEAL (A)	9	0	4	5	6	7	8		.....	.....	1	81350-MR5-000
12	RUBBER, SEAL (F)	9	0	4	5	6	7	8		.....	.....	1	81359-MR5-300
13	RUBBER, SEAL (M)	9	..	..	..	..	..	..	A	KM001227	.....	2	81367-MR5-300
		9	..	..	..	..	..	..	AC	KM000076	.....	2	81367-MR5-300
		..	0	4	5	6	7	8		.....	.....	2	81367-MR5-300
14	STAY, TRUNK LOCK	9	0	4	5	6	7	8		.....	.....	1	83310-MR5-000

 © AMERICAN HONDA MOTOR CO. INC. 1997

TRUNK LID

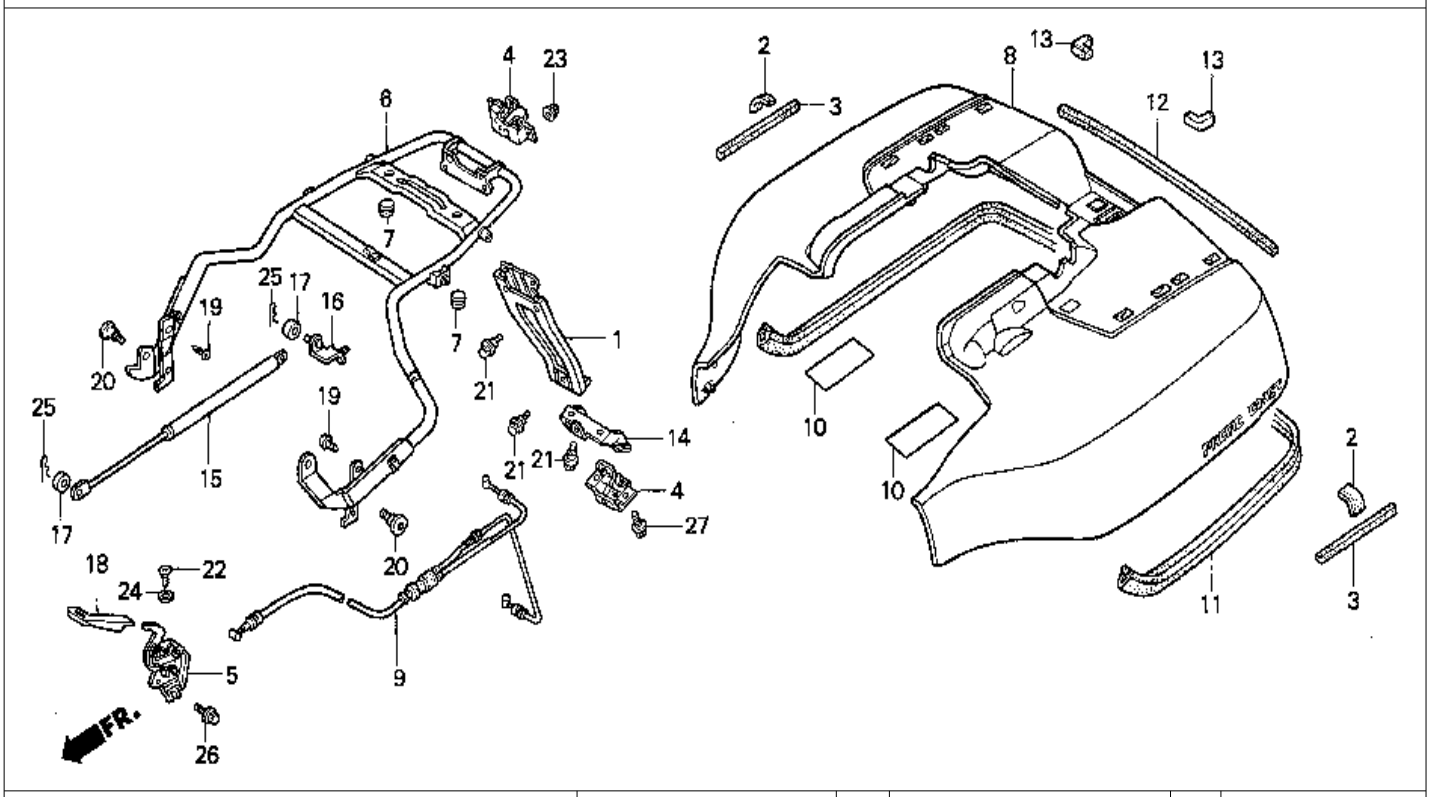

9 = PC800'89 6 = PC800'96
0 = PC800'90 7 = PC800'97
4 = PC800'94 8 = PC800'98
5 = PC800'95

Ref. No.	BLOCK NO. F-40 / DESCRIPTION	1998 9 / 9	1999 0 / 0	1999 4 / 4	1999 5 / 5	1999 6 / 6	1999 7 / 7	1999 8 / 8	AREA CODE	FRAME SERIAL FROM	FRAME NUMBER TO	QTY REQ	PART NUMBER
15	DAMPER ASSY., TRUNK	9	0	4	5	6	7	8		.....	.....	1	85270-MR5-003
16	STAY, DAMPER	9	..	4	5	6	7	8		.....	.....	1	85275-MR5-000
	STAY, DAMPER	..	0	..	..	..	..	..		.....	.....	1	85275-MR5-870
17	COLLAR A, RR. FENDER	9	..	..	..	..	..	..	A	KM001387	.....	2	80126-GC5-000
		9	..	..	..	..	..	..	AC	KM000076	.....	2	80126-GC5-000
		..	0	4	5	6	7	8		.....	.....	2	80126-GC5-000
	COLLAR, DAMPER SETTING	9	..	..	..	..	..	..	A	.....	KM001386	2	85278-MR5-000
		9	..	..	..	..	..	..	AC	.....	KM000075	2	85278-MR5-000
18	KNOB, TRUNK OPENER	9	0	4	5	6	7	8		.....	.....	1	85512-MR5-000
19	SCREW, TAPPING (4X12)	9	0	4	5	6	7	8		.....	.....	4	90101-SA4-000
	SCREW, TAPPING (4X16)	9	0	4	5	6	7	8		.....	.....	4	93913-14280
20	BOLT, RR. TRUNK OPENER PIVOT	9	..	..	..	..	..	..		.....	.....	2	90106-MR5-000
	BOLT, RR. TRUNK OPENER PIVOT	9	0	4	5	6	7	8		.....	.....	2	90105-MR5-020
21	BOLT, FLANGE (6MM)	9	0	4	5	6	7	8		.....	.....	5	90111-187-000
22	SCREW, TAPPING (4X10)	9	0	4	5	6	7	8		.....	.....	1	93903-34280
23	NUT, FLANGE (6MM)	9	0	4	5	6	7	8		.....	.....	2	94050-06080
24	WASHER, PLAIN (4MM)	9	0	4	5	6	7	8		.....	.....	1	94103-04700
25	PIN, LOCK (8MM)	9	0	4	5	6	7	8		.....	.....	2	94251-08000

 © AMERICAN HONDA MOTOR CO. INC. 1997

TRUNK LID

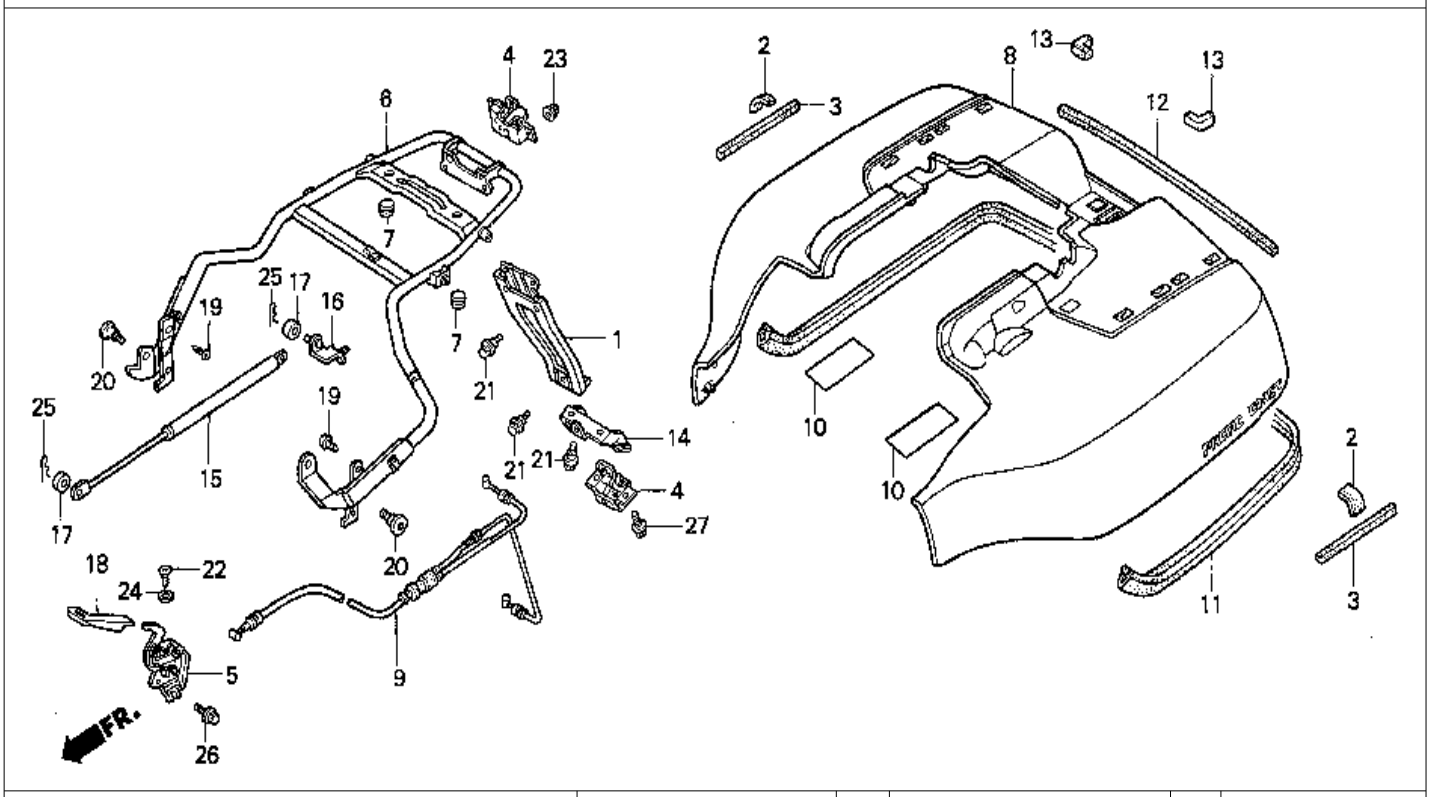

9 = PC800'89 6 = PC800'96
0 = PC800'90 7 = PC800'97
4 = PC800'94 8 = PC800'98
5 = PC800'95

Ref. No.	BLOCK NO. F-40 / DESCRIPTION	1989 / 9	1990 / 0	1994 / 4	1995 / 5	1996 / 6	1997 / 7	1998 / 8	AREA CODE	FRAME SERIAL NUMBER FROM		TO	QTY REQ	PART NUMBER
26	BOLT, FLANGE (6X12)	9	0	4	5	6	7	8		.....		.....	2	95701-06012-08
27	BOLT, FLANGE (6X12)	9	..	..	..	..	..	..	A	KM000372		.....	2	95701-06012-08
		9	..	..	..	..	..	..	AC	KM000076		.....	2	95701-06012-08
		..	0	4	5	6	7	8		.....		.....	2	95701-06012-08
	BOLT, FLANGE (6X12)	9	..	..	..	..	..	..	A	.....		KM000371	2	95701-06020-08
		9	..	..	..	..	..	..	AC	.....		KM000075	2	95701-06020-08

 © AMERICAN HONDA MOTOR CO. INC. 1997

TRUNK INNER BODY

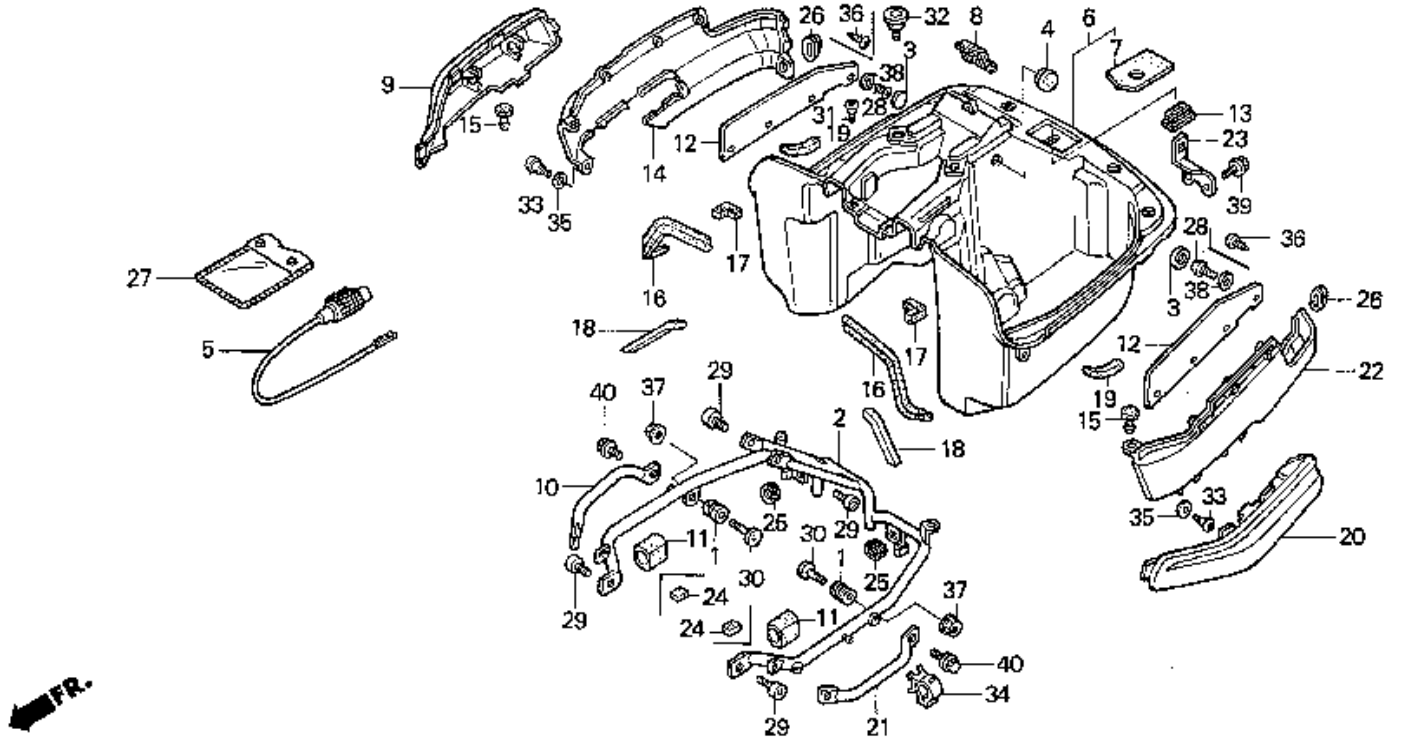

9 = PC800'89
0 = PC800'90
4 = PC800'94
5 = PC800'95
6 = PC800'96
7 = PC800'97
8 = PC800'98

Ref. No.	BLOCK NO. F-41 / DESCRIPTION	1989	1990	1994	1995	1996	1997	1998	AREA CODE	FRAME SERIAL NUMBER FROM	TO	QTY REQ	PART NUMBER
1	RUBBER, SETTING	9	0	4	5	6	7	8		.....	.....	2	43516-MR5-000
2	FRAME, RR. TRUNK	9	..	..	..	..	..	..		.....	.....	1	50240-MR5-000
	FRAME, RR. TRUNK	9	0	4	5	6	..	..		.....	.....	1	50240-MR5-870
	FRAME, RR. TRUNK	..	..	..	..	..	7	8		.....	.....	1	50240-MR5-A30
3	CAP, SCREEN SCREW	..	0	4	5	6	7	8		.....	.....	6	64109-MA2-000
4	GROMMET B, SIDE PANEL	9	0	4	5	6	7	8		.....	.....	4	70529-657-670
5	LOCK, WIRE	9	0	4	5	..	..	..		.....	.....	1	77237-MR5-000
	LOCK, WIRE	..	..	..	..	6	7	8		.....	.....	1	77237-MR5-003
6	BODY, TRUNK (INNER)	9	..	..	..	..	..	..		.....	.....	1	81210-MR5-000
	BODY, TRUNK (INNER)	9	0	4	5	6	7	8		.....	.....	1	81210-MR5-010
7	SHEET, TRUNK BODY (INNER)	9	0	4	5	6	7	8		.....	.....	1	81211-MR5-300
8	GROMMET, SEAL (A)	9	0	4	5	6	7	8		.....	.....	1	81213-MR5-000
9	PROTECTOR, R. TRUNK *NH253M* (TYPE1)												
	(OCEAN GRAY)	9	..	..	..	..	..	..		.....	.....	1	81214-MR5-000ZA
	PROTECTOR, R. TRUNK *NH292M* (TYPE3)												
	(GRIFFIN GRAY)	..	0	4	5	..	..	..		.....	.....	1	81214-MR5-000ZC

 © AMERICAN HONDA MOTOR CO. INC. 1997

TRUNK INNER BODY

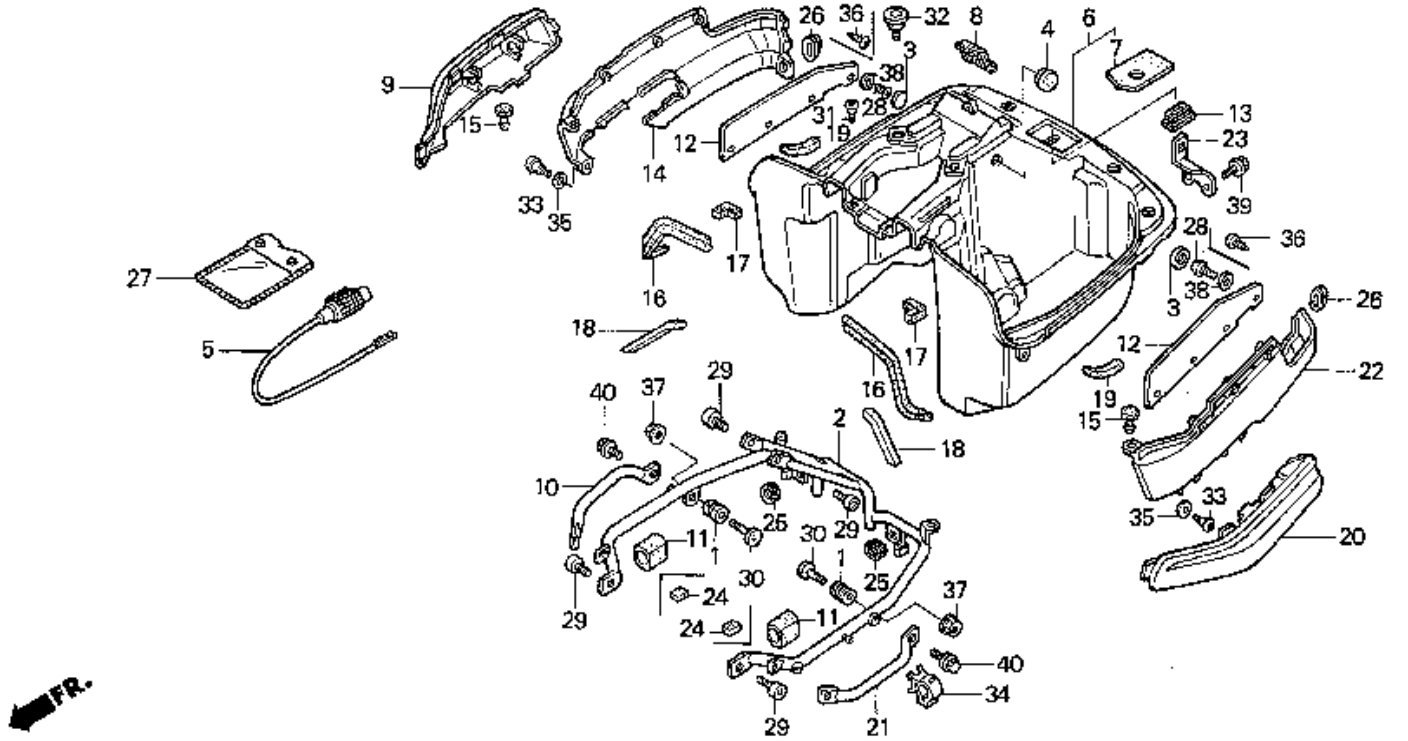

9 = PC800'89
0 = PC800'90
4 = PC800'94
5 = PC800'95
6 = PC800'96
7 = PC800'97
8 = PC800'98

Ref. No.	BLOCK NO. F-41 / DESCRIPTION	1989	1990	1994	1995	1996	1997	1998	AREA CODE	FRAME SERIAL FROM		FRAME NUMBER TO	QTY REQ	PART NUMBER
9	PROTECTOR, R. TRUNK *NH292M* (GRIFFIN GRAY)	..	0	4	5	..	..	..		.....		.....	1	81214-MR5-000ZE
	PROTECTOR, R. TRUNK *NH197MU* (KARAKORUM GRAY)	..	..	..	..	6	..	..		.....		.....	1	81214-MR5-000ZF
	PROTECTOR, R. TRUNK *NH340R*	..	..	..	..	..	7	8		.....		.....	1	81214-MR5-A30ZA
10	BUMPER, R. RR.	9	0	4	5	6	7	8		.....		.....	1	81215-MR5-000
11	RUBBER, TRUNK	..	0	4	5	6	7	8		.....		.....	4	81215-MR5-870
12	WALL, TRUNK SIDE	9	0	4	5	6	7	8		.....		.....	2	81216-MR5-000
13	GROMMET, SEAL (B)	9	0	4	5	6	7	8		.....		.....	1	81217-MR5-000
14	COVER, R. TRUNK *NH253M* (TYPE1) (OCEAN GRAY)	9	..	..	..	..	..	..		.....		.....	1	81240-MR5-000ZA
	COVER, R. TRUNK *NH292M* (TYPE3) (GRIFFIN GRAY)	..	0	4	5	..	..	..		.....		.....	1	81240-MR5-000ZC
	COVER, R. TRUNK *NH292M* (GRIFFIN GRAY)	..	0	4	5	..	..	..		.....		.....	1	81240-MR5-000ZE

 © AMERICAN HONDA MOTOR CO. INC. 1997

TRUNK INNER BODY

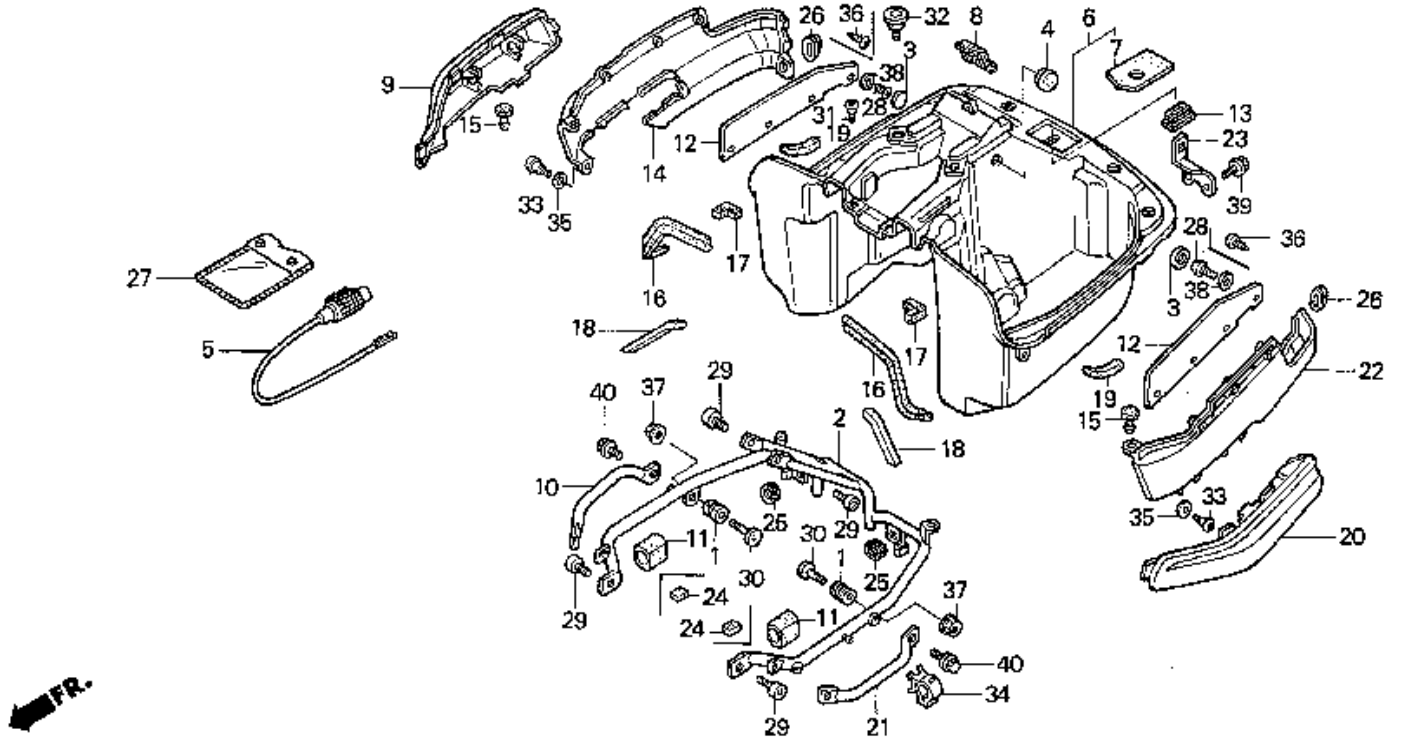

9 = PC800'89	6 = PC800'96								A				
0 = PC800'90	7 = PC800'97				PC800				R				
4 = PC800'94	8 = PC800'98								E			Q	
5 = PC800'95									A			T	
		1	1	1	1	1	1	1				Y	
		9	9	9	9	9	9	9	C				
		8	9	9	9	9	9	9	O	FRAME		R	
Ref.	BLOCK NO. F-41	9	0	4	5	6	7	8	D	SERIAL	NUMBER	E	
No.	DESCRIPTION	9	0	4	5	6	7	8	E	FROM	TO	Q	PART NUMBER
14	COVER, R. TRUNK *NH197MU*												
	(KARAKORUM GRAY)	..	..	..	..	6	..	..		.....	.....	1	81240-MR5-000ZF
	COVER, R. TRUNK *NH340R*	..	..	..	..	..	7	8		.....	.....	1	81240-MR5-A30ZA
15	PLUG, PIN	9	0	4	5	6	7	8		.....	.....	2	81242-MR5-000
16	RUBBER, SEAL (B)	9	0	4	5	6	7	8		.....	.....	2	81355-MR5-000
17	RUBBER, SEAL (H)	9	0	4	5	6	7	8		.....	.....	2	81364-MR5-300
18	RUBBER, SEAL (K)	9	0	4	5	6	7	8		.....	.....	2	81368-MR5-300
19	RUBBER, SEAL (L)	..	0	4	5	6	7	8		.....	.....	2	81369-MR5-300
20	PROTECTOR, R. TRUNK *NH253M* (TYPE1)												
	(OCEAN GRAY)	9	..	..	..	..	..	..		.....	.....	1	81414-MR5-000ZA
	PROTECTOR, R. TRUNK *NH292M* (TYPE3)												
	(GRIFFIN GRAY)	..	0	4	5	..	..	..		.....	.....	1	81414-MR5-000ZC
	PROTECTOR, R. TRUNK *NH292M*												
	(GRIFFIN GRAY)	..	0	4	5	..	..	..		.....	.....	1	81414-MR5-000ZE
	PROTECTOR, R. TRUNK *NH197MU*												
	(KARAKORUM GRAY)	..	..	..	..	6	..	..		.....	.....	1	81414-MR5-000ZF
	PROTECTOR, R. TRUNK *NH340R*	..	..	..	..	..	7	8		.....	.....	1	81414-MR5-A30ZA

 © AMERICAN HONDA MOTOR CO. INC. 1997

TRUNK INNER BODY

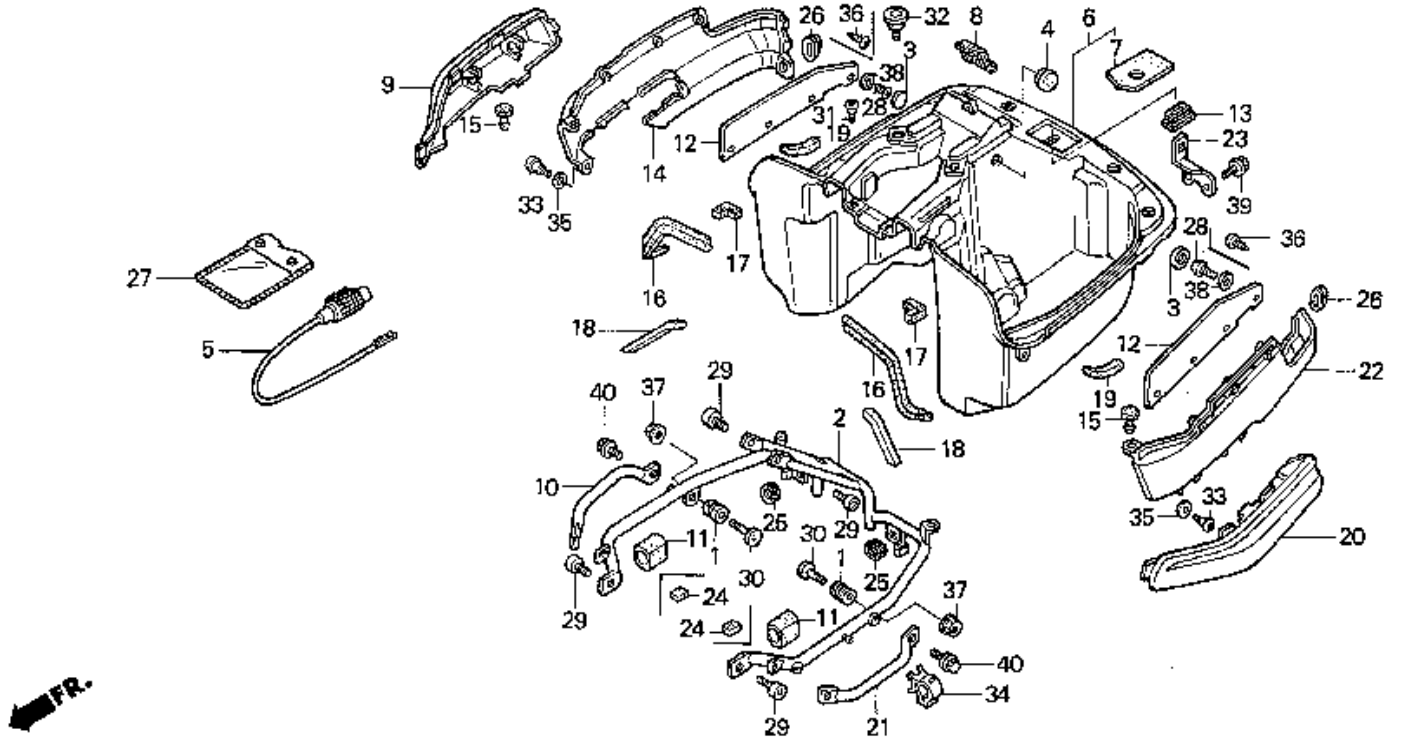

9 = PC800'89	6 = PC800'96								A				
0 = PC800'90	7 = PC800'97				PC800				R				
4 = PC800'94	8 = PC800'98								E			Q	
5 = PC800'95									A			T	
		1	1	1	1	1	1	1				Y	
		9	9	9	9	9	9	9	C				
		8	9	9	9	9	9	9	O	FRAME		R	
Ref.	BLOCK NO. F-41	9	0	4	5	6	7	8	D	SERIAL	NUMBER	E	
No.	DESCRIPTION	9	0	4	5	6	7	8	E	FROM	TO	Q	PART NUMBER
21	BUMPER, L. RR.	9	0	4	5	6	7	8		.....	.....	1	81415-MR5-000
22	COVER, L. TRUNK *NH253M* (TYPE1)												
	(OCEAN GRAY)	9	..	..	..	..	..	..		.....	.....	1	81440-MR5-000ZA
	COVER, L. TRUNK *NH292M* (TYPE3)												
	(GRIFFIN GRAY)	..	0	4	5	..	..	..		.....	.....	1	81440-MR5-000ZC
	COVER, L. TRUNK *NH292M*												
	(GRIFFIN GRAY)	..	0	4	5	..	..	..		.....	.....	1	81440-MR5-000ZE
	COVER, L. TRUNK *NH197MU*												
	(KARAKORUM GRAY)	..	..	..	..	6	..	..		.....	.....	1	81440-MR5-000ZF
	COVER, L. TRUNK *NH340R*	..	..	..	..	..	7	8		.....	.....	1	81440-MR5-A30ZA
23	STRIKER, TRUNK (LOWER)	9	0	4	5	6	7	8		.....	.....	1	83305-MR5-000
24	RUBBER, TOOL BOX	9	0	4	5	6	7	8		.....	.....	6	83521-198-900
25	GROMMET, AIR CLEANER HOUSING	9	0	4	5	6	7	8		.....	.....	2	83551-300-000
26	GROMMET A, SIDE COVER	9	0	4	5	6	7	8		.....	.....	2	83601-MB0-000
27	BAG, OWNER'S MANUAL	9	0	4	5	6	7	8		.....	.....	1	83642-MN5-000
28	SCREW, SPECIAL (5MM)	..	0	4	5	6	7	8		.....	.....	6	90006-MR5-870
29	BOLT, SOCKET (8X25)	9	0	4	5	6	7	8		.....	.....	4	90102-MN8-700

 © AMERICAN HONDA MOTOR CO. INC. 1997

TRUNK INNER BODY

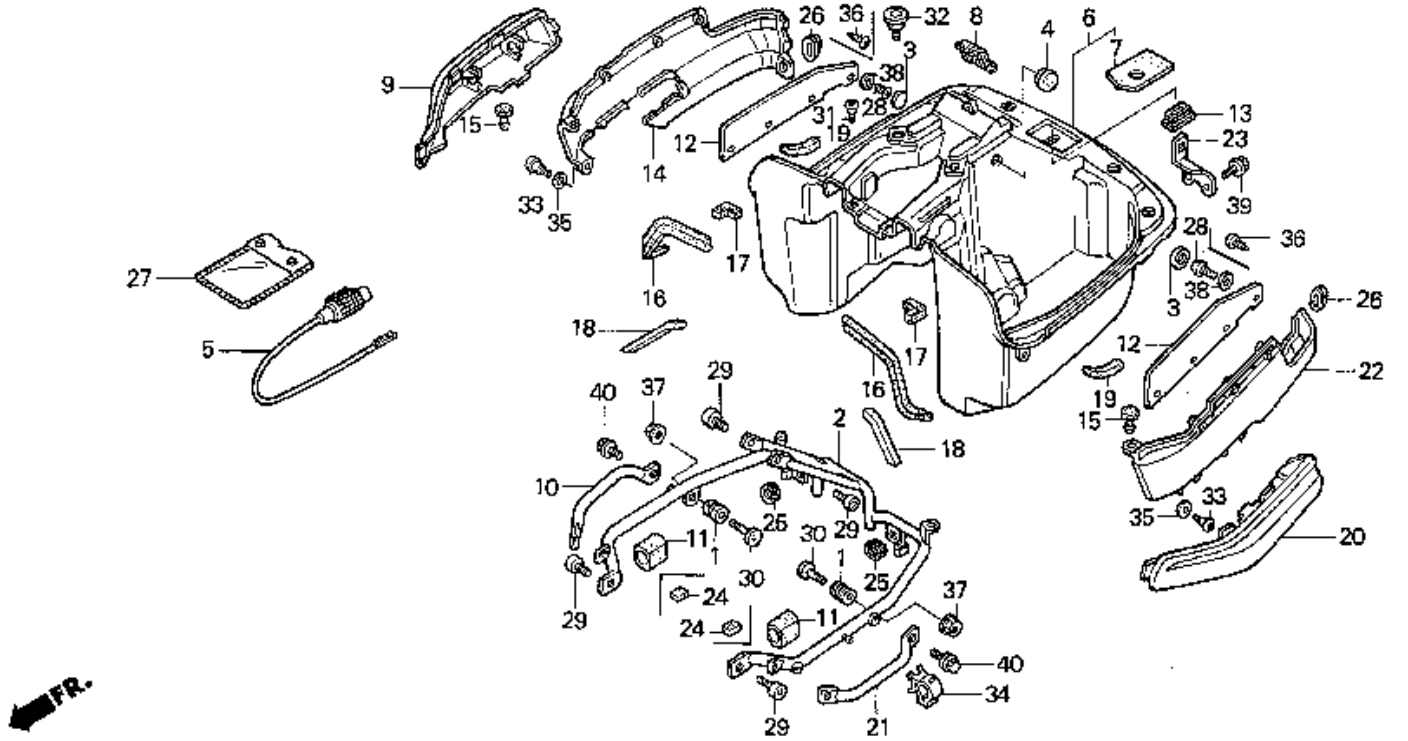

9 = PC800'89
0 = PC800'90
4 = PC800'94
5 = PC800'95
6 = PC800'96
7 = PC800'97
8 = PC800'98

Ref. No.	BLOCK NO. F-41 / DESCRIPTION	1989	1990	1994	1995	1996	1997	1998	AREA CODE	FRAME SERIAL FROM		FRAME NUMBER TO	QTY REQ	PART NUMBER
		PC800												
30	BOLT, SPECIAL (6X24)	9	0	4	5	6	7	8		.....		.....	2	90103-MR5-010
31	SCREW, PAN (6X14)	9	0	4	5	6	7	8		.....		.....	2	90113-MR5-000
32	BOLT, SPECIAL (6X12)	9	0	4	5	6	7	8		.....		.....	2	90115-MR5-000
33	SCREW, PAN (5X16.5)	9	0	4	5	6	7	8		.....		.....	2	90142-MB0-000
34	CLIP, CABLE (10MM)	9	..	..	..	..	..	..	A	.....		KM001921	1	90690-GHB-641
		9	..	..	..	..	..	..	AC	.....		KM000609	1	90690-GHB-641
	CLIP, CABLE (15MM)	9	..	..	..	..	..	..	A	KM001922		.....	1	90690-GHB-651
		9	..	..	..	..	..	..	AC	KM000610		.....	1	90690-GHB-651
		..	0	4	5	6	7	8		.....		.....	1	90690-GHB-651
35	WASHER, PLAIN (7MM)	9	0	4	5	6	7	8		.....		.....	2	90755-693-620
36	SCREW, TAPPING (5X16)	9	..	..	..	..	..	..		.....		.....	6	93903-25380
37	NUT, FLANGE (6MM)	9	0	4	5	6	7	8		.....		.....	2	94050-06080
38	WASHER, FLAT (5MM)	..	0	4	5	6	7	8		.....		.....	6	94101-05700
39	BOLT, FLANGE (6X16)	9	0	4	5	6	7	8		.....		.....	2	95701-06016-08
40	BOLT, FLANGE (8X14)	9	0	4	5	6	7	8		.....		.....	4	95701-08014-08

 © AMERICAN HONDA MOTOR CO. INC. 1997

CANISTER (AC)

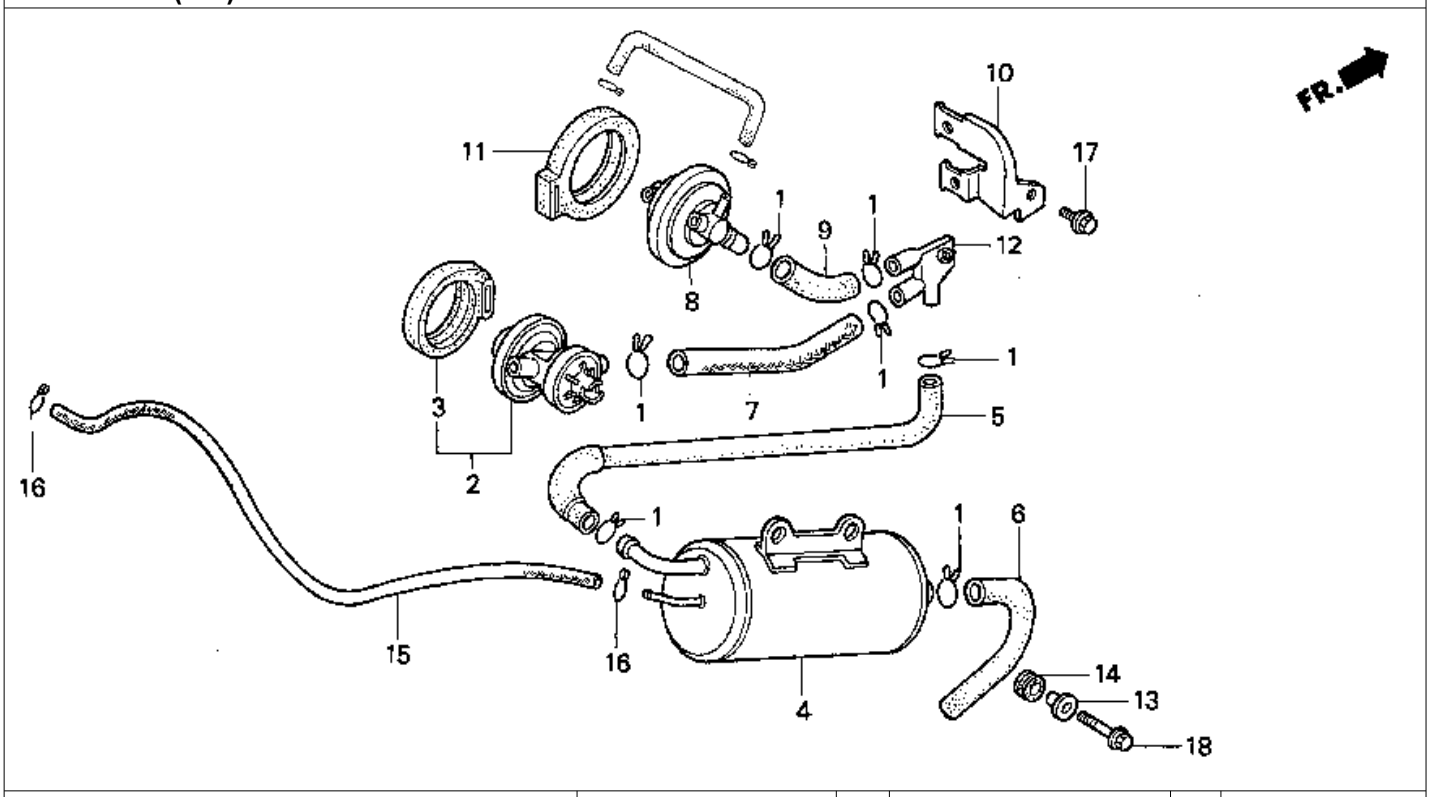

9 = PC800'89 6 = PC800'96
0 = PC800'90 7 = PC800'97
4 = PC800'94 8 = PC800'98
5 = PC800'95

BLOCK NO. F-42

Ref. No.	DESCRIPTION	1989 9	1990 0	1994 4	1995 5	1996 6	1997 7	1998 8	AREA CODE	FRAME SERIAL FROM		FRAME NUMBER TO	QTY REQ	PART NUMBER
1	CLIP, BREATHER TUBE	9	0	4	5	6	7	8	AC	.....		.....	7	15772-500-010
	CLIP, BREATHER TUBE	9	0	4	5	6	7	8	AC	.....		.....	7	15772-500-013
2	VALVE ASSY., EVAP EMISSION													
	CARBURETOR AIR VENT CONTROL	9	0	4	5	6	7	8	AC	.....		.....	1	17300-MR5-790
3	RUBBER, SETTING	9	0	4	5	6	7	8	AC	.....		.....	1	17305-MJ4-771
4	CANISTER COMP., EVAPORATIVE EMISSION	9	0	..	..	..	..	..	AC	.....		.....	1	17410-MR5-791
	CANISTER COMP., EVAPORATIVE EMISSION	..	..	4	5	6	7	8	AC	.....		.....	1	17410-MR5-792
5	TUBE (CANISTER THREE WAY)	9	0	4	5	6	7	8	AC	.....		.....	1	17411-MR5-790
6	TUBE, CANISTER OPEN AIR	9	0	4	5	6	7	8	AC	.....		.....	1	17419-MR5-790
7	TUBE (AIR VENT CONTROL VALVE-3WAY)	9	0	4	5	6	7	8	AC	.....		.....	1	17431-MR5-790
8	VALVE COMP., EVAPORATIVE EMISSION													
	PURGE CONTROL	9	0	4	5	6	7	8	AC	.....		.....	1	17440-MR5-790
9	TUBE (PURGE CONTROL VALVE-3WAY)	9	0	4	5	6	7	8	AC	.....		.....	1	17441-MR5-790
10	STAY (P.C.V.& A.V.C.V.)	9	0	4	5	6	7	8	AC	.....		.....	1	17445-MR5-790

 © AMERICAN HONDA MOTOR CO. INC. 1997

CANISTER (AC)

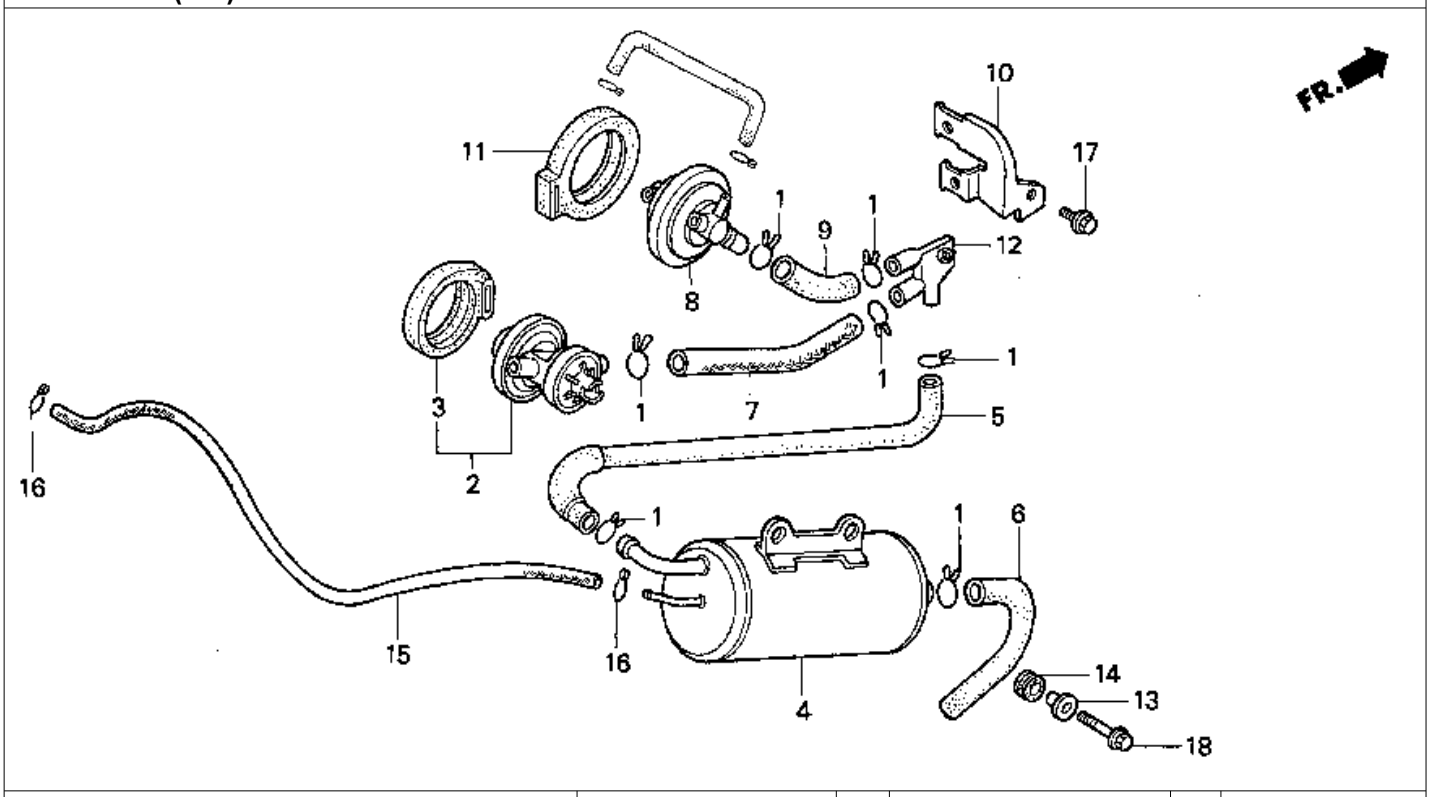

9 = PC800'89 6 = PC800'96
0 = PC800'90 7 = PC800'97
4 = PC800'94 8 = PC800'98
5 = PC800'95

BLOCK NO. F-42

Ref. No.	DESCRIPTION	1989 9	1990 0	1994 4	1995 5	1996 6	1997 7	1998 8	AREA CODE	FRAME SERIAL NUMBER FROM		TO	QTY REQ	PART NUMBER
11	RUBBER, PURGE CONTROL VALCE SETTING	9	0	4	5	6	7	8	AC	.....		.....	1	17451-ME5-760
12	JOINT, THREE-WAY (F-TYPE)	9	0	4	5	6	7	8	AC	.....		.....	1	17468-MR5-790
13	COLLAR, SETTING	9	0	4	5	6	7	8	AC	.....		.....	2	61104-422-000
14	RUBBER, HEADLIGHT CASE SETTING	9	0	4	5	6	7	8	AC	.....		.....	2	61304-415-000
15	BULK HOSE, FUEL (4.5X3000) (4.5X550)	9	0	4	5	6	7	8	AC	.....		.....	1	95001-45003-20M
16	CLIP, TUBE (B8)	9	0	4	5	6	7	8	AC	.....		.....	2	95002-02080
17	BOLT, FLANGE (6X12)	9	0	4	5	6	7	8	AC	.....		.....	1	95701-06012-00
18	BOLT, FLANGE (6X22)	9	0	4	5	6	7	8	AC	.....		.....	2	95701-06022-08

 © AMERICAN HONDA MOTOR CO. INC. 1997

CAUTION LABEL

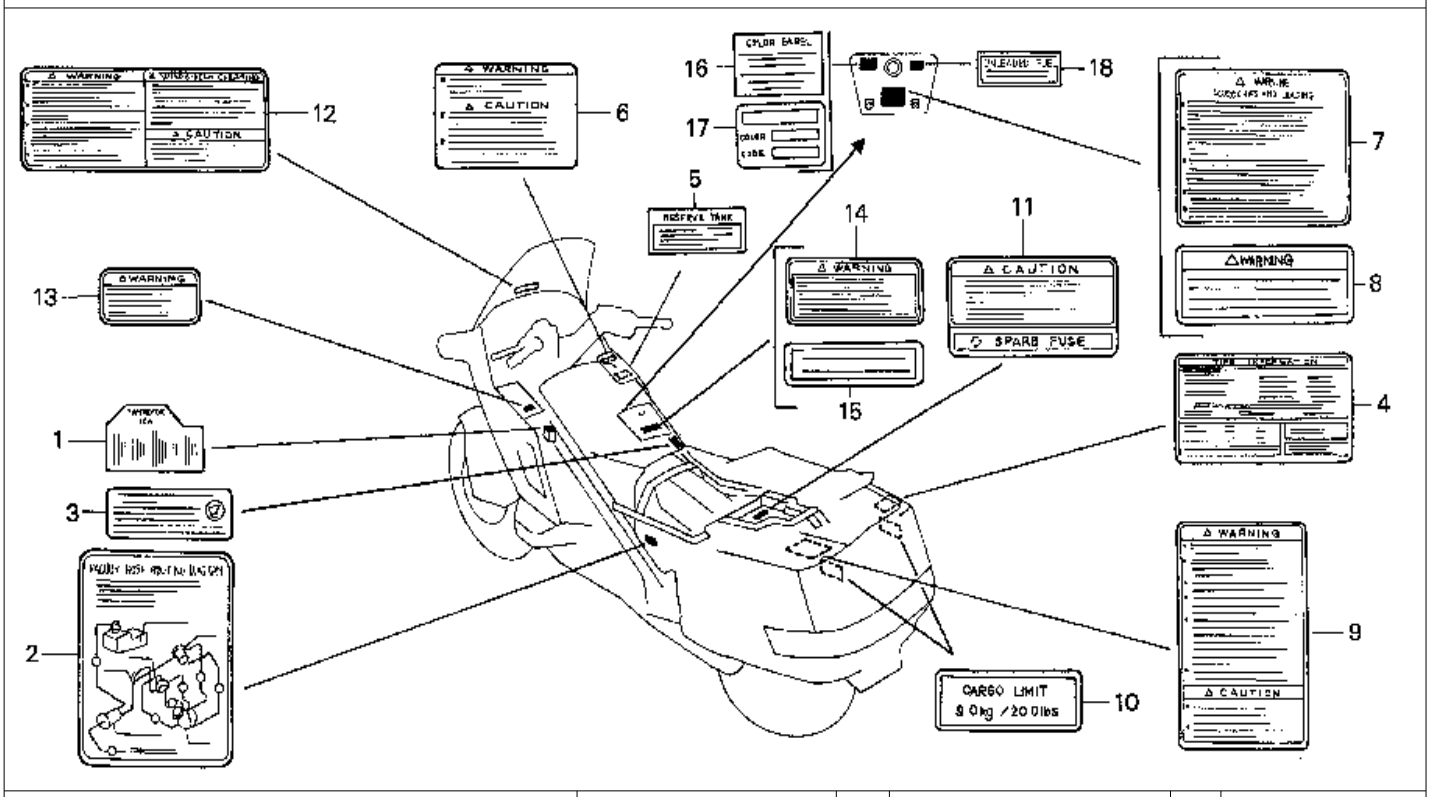

9 = PC800'89 6 = PC800'96
0 = PC800'90 7 = PC800'97
4 = PC800'94 8 = PC800'98
5 = PC800'95

Ref. No.	BLOCK NO. F-43 / DESCRIPTION	PC800 1989	1990	1994	1995	1996	1997	1998	AREA CODE	FRAME SERIAL FROM		FRAME NUMBER TO	QTY REQ	PART NUMBER
1	LABEL, FUSE	9	..	..	..	..	..	..		.....		.....	1	38215-MR5-300
	LABEL, FUSE	..	0	4	5	6	..	..		.....		.....	1	38215-MR5-870
2	DIAGRAM, VACUUM HOSE ROUTING	9	..	..	..	..	..	..		.....		.....	1	87135-MR5-790
	DIAGRAM, VACUUM HOSE ROUTING	..	0	..	..	..	..	..		.....		.....	1	87135-MR5-890
	DIAGRAM, VACUUM HOSE ROUTING	..	..	4	..	..	..	..		.....		.....	1	87135-MR5-820
	DIAGRAM, VACUUM HOSE ROUTING	..	..	..	5	..	..	..		.....		.....	1	87135-MR5-A10
	DIAGRAM, VACUUM HOSE ROUTING	..	..	..	..	6	..	..		.....		.....	1	87135-MR5-L00
	DIAGRAM, VACUUM HOSE ROUTING	..	..	..	..	..	7	..		.....		.....	1	87135-MR5-L10
	DIAGRAM, VACUUM HOSE ROUTING	..	..	..	..	..	..	8		.....		.....	1	87135-MR5-L20
3	LABEL, HIGH ALTITUDE	..	..	4	5	6	7	8		.....		.....	(1)	87139-463-670
4	LABEL, TYRE	9	0	..	..	..	..	..		.....		.....	1	87505-MR5-670
	LABEL, TYRE	..	..	4	5	6	7	8		.....		.....	1	87505-MR5-800
5	LABEL, RESERVE TANK	9	0	..	..	..	..	..		.....		.....	1	87507-MB4-670
6	LABEL, RADIATOR	9	0	..	..	..	..	..		.....		.....	1	87508-MT2-300
7	LABEL, ACESSORIES & LOADING	9	0	..	..	..	..	..		.....		.....	1	87512-MR5-670
8	LABEL, LOADING	..	..	4	5	6	7	8		.....		.....	1	87512-MY3-670

 © AMERICAN HONDA MOTOR CO. INC. 1997

CAUTION LABEL

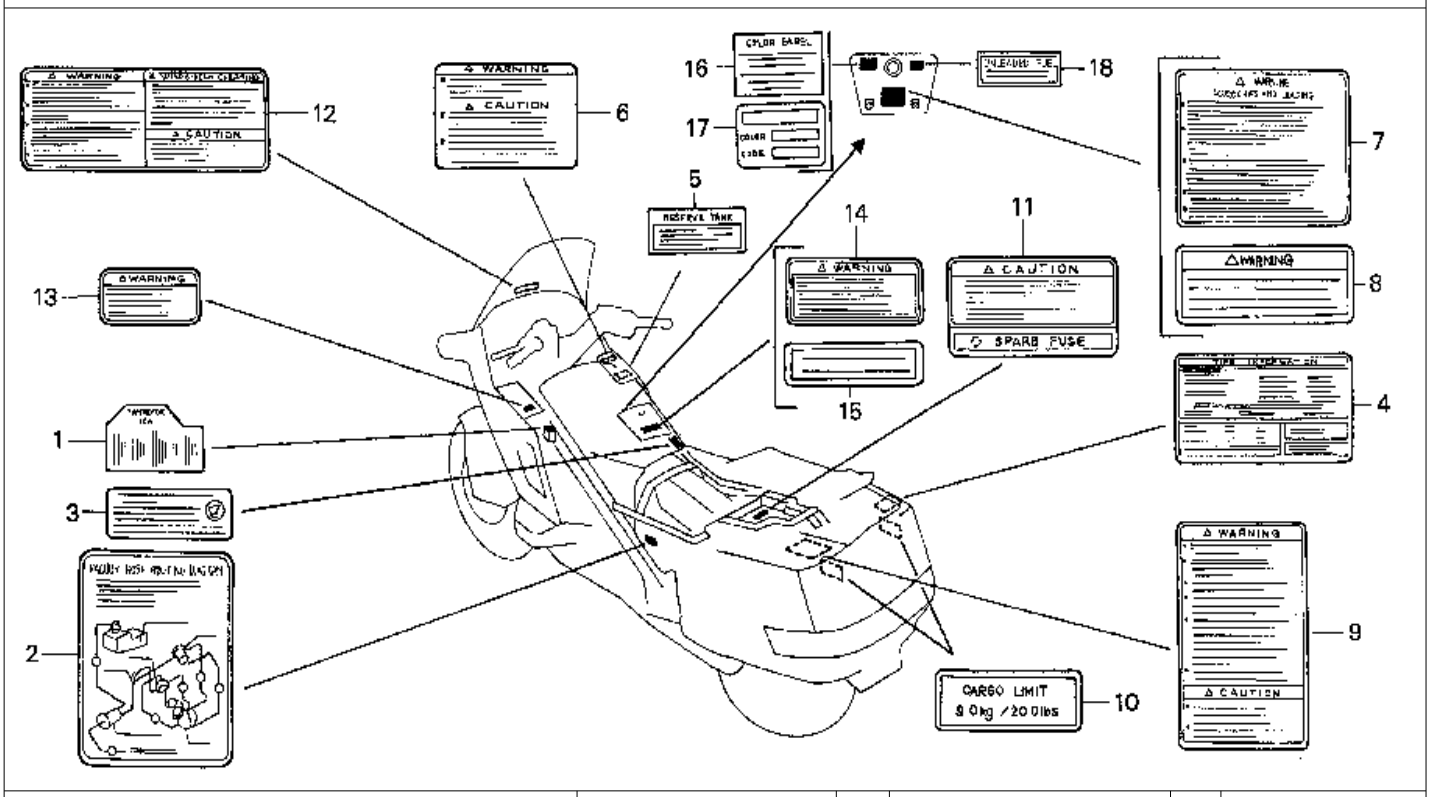

9 = PC800'89 6 = PC800'96
0 = PC800'90 7 = PC800'97
4 = PC800'94 8 = PC800'98
5 = PC800'95

Ref. No.	BLOCK NO. F-43 / DESCRIPTION	PC800 1998 9	1999 0	1999 4	1999 5	1999 6	1999 7	1999 8	AREA CODE	FRAME SERIAL FROM		NUMBER TO	QTY REQ	PART NUMBER
9	LABEL, TRUNK	9	0	..	..	..	..	..		.....		.....	1	87520-MR5-300
10	LABEL, CARGO LIMIT (9.0KG)	..	..	4	5	6	7	8		.....		.....	2	87520-MR5-300
11	LABEL, TRUNK DAMPER	9	0	..	..	..	..	..		.....		.....	1	87521-MR5-300
	LABEL, TRUNK DAMPER	..	..	4	5	6	..	..		.....		.....	1	87521-MR5-800
	LABEL, TRUNK DAMPER	..	..	..	..	..	7	8		.....		.....	1	87521-MR5-A30
12	LABEL, WINDSHIELD	9	0	..	..	..	..	..		.....		.....	1	87522-MT2-300
13	LABEL, POCKET	9	0	4	..	..	..	..		.....		.....	1	87524-MR5-300
14	LABEL, DRIVE (TYPET) *TRANSPARENCY*	9	0	..	..	..	..	..		.....		.....	1	87560-MT2-300ZB
15	LABEL, DRIVE (TYPE2)	..	..	4	5	6	..	..		.....		.....	1	87560-MW0-670ZB
	LABEL, DRIVE	..	..	..	..	..	7	8		.....		.....	1	87560-MZ0-670
16	LABEL, COLOR *NH251P* (TYPE1)													
	(PACIFIC WHITE)	9	..	..	..	..	..	..		.....		.....	1	87565-MR5-300ZA
	LABEL, COLOR (TYPE8)	..	..	..	..	..	..	8		.....		.....	1	87565-MR5-A40ZA
17	LABEL, COLOR *R101CU* (TYPE3)													
	(CANDY GLORY RED)	..	0	..	..	..	..	..		.....		.....	1	87565-MR5-870ZC

 © AMERICAN HONDA MOTOR CO. INC. 1997

CAUTION LABEL

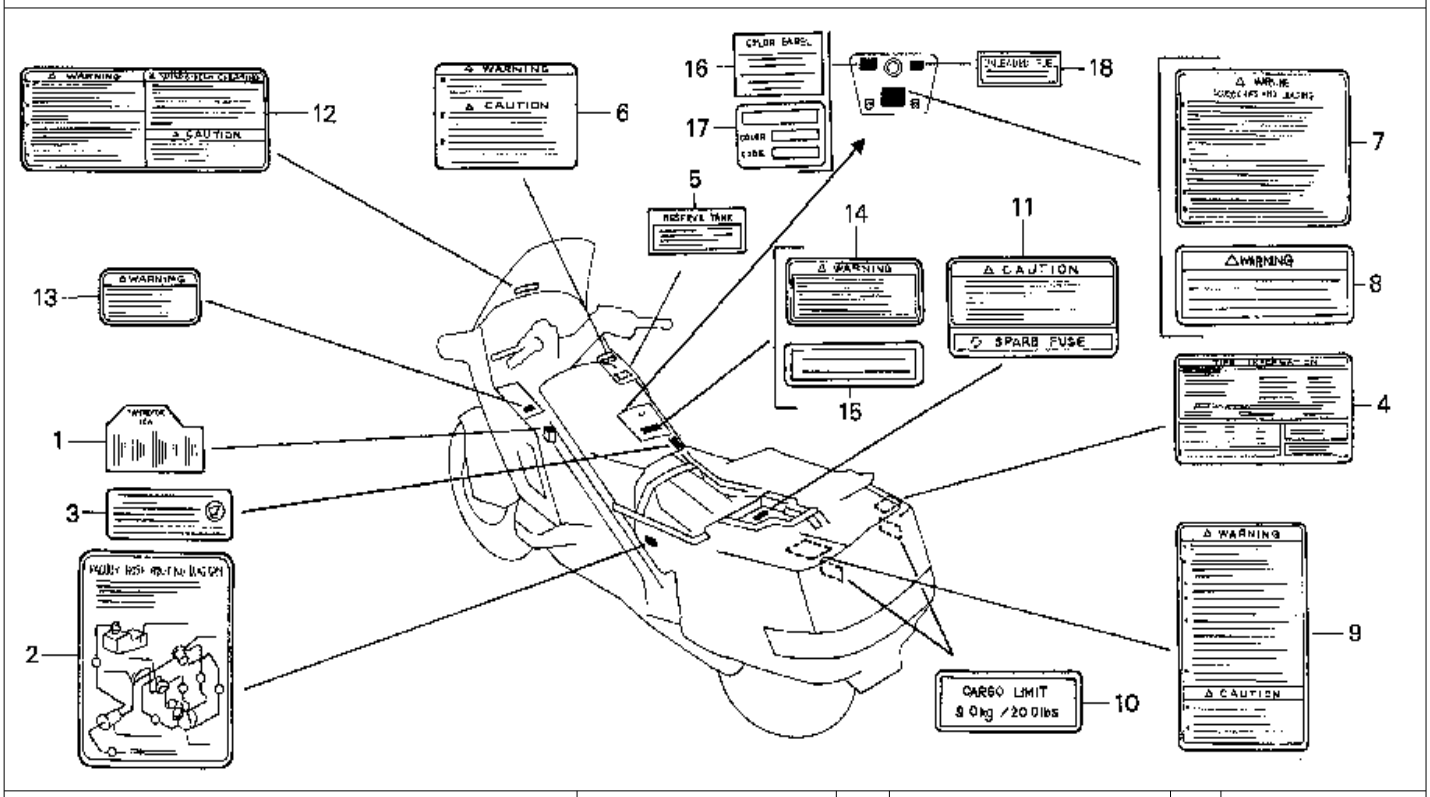

9 = PC800'89 6 = PC800'96
0 = PC800'90 7 = PC800'97
4 = PC800'94 8 = PC800'98
5 = PC800'95

Ref. No.	BLOCK NO. F-43 DESCRIPTION	PC800 1989 9	1990 0	1994 4	1995 5	1996 6	1997 7	1998 8	AREA CODE	FRAME SERIAL NUMBER FROM	TO	QTY REQ	PART NUMBER
17	LABEL, COLOR *NH1Z* (TYPE5) (BLACK-Z)	..	..	4	..	..	..	..		.....	.....	1	87565-MR5-800ZB
	LABEL, COLOR *NH1Z* (TYPE5) (BLACK-Z)	..	..	..	5	..	..	..		.....	.....	1	87565-MR5-A00ZA
	LABEL, COLOR *R201* (TYPE6) (MAGNA RED)	..	..	..	..	6	..	..		.....	.....	1	87565-MR5-A20ZA
	LABEL, COLOR *R201B* (TYPE6) (MAGNA RED)	..	..	..	..	..	7	..		.....	.....	1	87565-MR5-A30ZA
	LABEL, COLOR (TYPE8)	..	..	..	..	..	..	8		.....	.....	1	87565-MR5-A40ZA
18	LABEL, FUEL *NH1* (TYPEB) (BLACK)	9	0	..	..	..	..	..		.....	.....	1	87586-MR6-670ZC
	LABEL, FUEL *NH1* (TYPEW) (WHITE)	..	..	4	5	6	..	..		.....	.....	1	87586-MR6-670ZD

 © AMERICAN HONDA MOTOR CO. INC. 1997

MARK

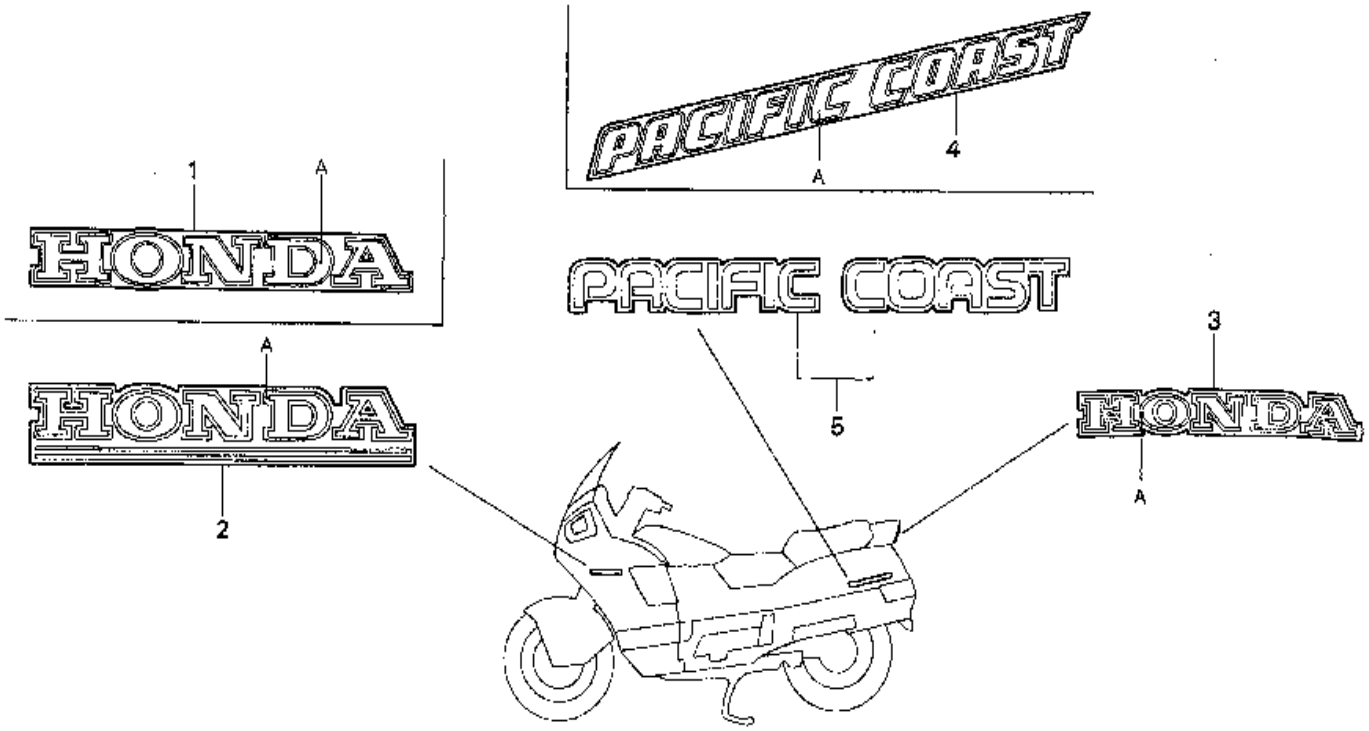

9 = PC800'89 6 = PC800'96
0 = PC800'90 7 = PC800'97
4 = PC800'94 8 = PC800'98
5 = PC800'95

Ref. No.	BLOCK NO. F-44 DESCRIPTION	PC800 1989	1990	1994	1995	1996	1997	1998	AREA CODE	FRAME SERIAL NUMBER FROM		TO	QTY REQ	PART NUMBER
1	MARK, FR. COWL (UPPER) (TYPE6)	..	..	..	..	6	7	8		.....		.....	2	64201-MR5-A20ZA
2	MARK, FR. COWL (UPPER) (TYPE1)	9	..	..	..	..	..	..		.....		.....	2	64201-MR5-300ZA
	MARK, FR. COWL (UPPER) (TYPE3)	..	0	..	..	..	..	..		.....		.....	2	64201-MR5-300ZB
	MARK, FR. COWL (UPPER) (TYPE5)	..	..	4	5	..	..	..		.....		.....	2	64201-MR5-800ZB
3	MARK, TAIL COWL (TYPE 1)	9	..	..	..	..	..	..		.....		.....	1	77211-MR5-300ZA
	MARK, TAIL COWL (TYPE 3)	..	0	..	..	..	..	..		.....		.....	1	77211-MR5-300ZC
	MARK, TAIL COWL (TYPE 5)	..	..	4	5	..	..	..		.....		.....	1	77211-MR5-800ZB
	MARK, TAIL COWL (TYPE 6)	..	..	..	..	6	7	8		.....		.....	1	77211-MR5-A20ZA
4	MARK, TRUNK LID (TYPE6)	..	..	..	..	6	7	8		.....		.....	2	81221-MR5-A20ZA
5	MARK, TRUNK LID (TYPE1)	9	..	..	..	..	..	..		.....		.....	2	81221-MR5-300ZA
	MARK, TRUNK LID (TYPE3)	..	0	..	..	..	..	..		.....		.....	2	81221-MR5-300ZC
	MARK, TRUNK LID (TYPE5)	..	..	4	5	..	..	..		.....		.....	2	81221-MR5-800ZB

 © AMERICAN HONDA MOTOR CO. INC. 1997

MARK

Color chart for mark

Type	Main color	Position A
TYPE 1	Pearl Pacific white (NH-251P)	Ocean gray metallic
TYPE 3	Candy glory red-U (R-101C-U)	Silver metallic
TYPE 5	BLACK-Z (NH-1-Z)	Dark gray metallic
TYPE 6	Magna red (R-201)	Karakorum gray metallic-U

9 = PC800'89
0 = PC800'90
4 = PC800'94
5 = PC800'95
6 = PC800'96
7 = PC800'97
8 = PC800'98

Ref. No.	BLOCK NO. F-44 DESCRIPTION	PC800 1989	1990	1994	1995	1996	1997	1998	AREA CODE	FRAME SERIAL NUMBER FROM	TO	QTY REQ	PART NUMBER
										.....	.....		
										.....	.....		
										.....	.....		
										.....	.....		
										.....	.....		
										.....	.....		
										.....	.....		
										.....	.....		
										.....	.....		
										.....	.....		
										.....	.....		
										.....	.....		
										.....	.....		
										.....	.....		
										.....	.....		
										.....	.....		
										.....	.....		
										.....	.....		

 © AMERICAN HONDA MOTOR CO. INC. 1997